Fumagalli®
since 1973

MADE IN ITALY

GENERAL CATALOGUE 2019

Corporate Management

Geom. **Giancarlo Fumagalli**
Managing Director



Holder of a diploma by the technical high school for building surveyor, he is the creator of this composite material ligthing system.
He speaks Italian and French.

Diplomato alla scuola tecnica per geometri, è ideatore di questo sistema di lampade in materiale composito.
Parla italiano e francese.

Dr. **Marisa Rabuffetti**
Finance Director



Graduate by the Milan University in economic sciences, she is teacher of banking and commercial tecnique. She speaks Italian, English and French.

Laureata all'università di Milano in scienze economiche, è insegnante alle scuole superiori di tecnica commerciale e bancaria.
Parla italiano, inglese e francese.

Dr. **Chiara Fumagalli**
Commercial Director



Graduate by the Milan University in philosophy, she is holder of a diploma in foreign languages: she can speak and write in Italian, English, German French.

Laureata all'università di Milano in filosofia, è diplomata in lingue straniere: scrive e parla italiano, inglese, tedesco e francese.

Arch. **Paolo Fumagalli**
Purchasing and Technical Director



Graduate in architecture by the polytechnic University of Milan, he achieved the specialization in lighting tecnique by the University of Manchester (U. K.). He speaks Italian and English.

Laureato in architettura al Politecnico di Milano, ha conseguito la specializzazione in illuminotecnica all'università di Manchester (U.K.). Parla italiano e inglese.

Dr. **Emmanuele Fumagalli**
Assistant General Manager
Human Resources Director



Graduate by the Milan University in jurisprudence, he achieved the specialization in international law.
He speaks Italian and English.

Laureato in Giurisprudenza all'università di Milano con specializzazione in diritto internazionale
Parla italiano e inglese.



CARLO 26
CARLO WALL 28
CARLO-FS 28
AMELIA 30
AMELIA WALL 32
AMELIA-FS 32



FRANCA 90 52
FRANCA 90-1L WALL 54
FRANCA 90-2L WALL 54
MARTA 90 56
MARTA 160 60
FRANCY 64



FRANCY-OP 70
BERTINA 74
BERTA 78
UMBERTA 82
GELMI 88
DANZI 92

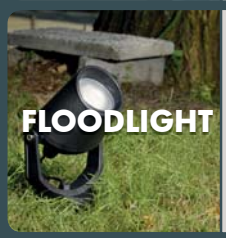

MINITOMMY 122
MINITOMMY-2L 124
TOMMY 128
TOMMY-2L 130
GIOVA/GERMANA 136
GERMANA 140

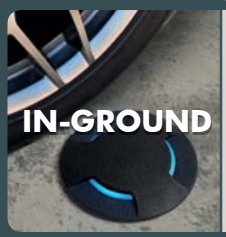

CECI 90 154
CECI 120 158
CECI 160 162



LETI 100 ROUND 168
LETI 100 SQUARE 172



ANNA 202
SABA 208
RUT 214
SALEM 220
GOLIA 226
CEFA 232

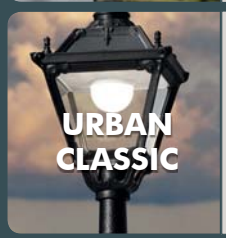

NOEMI 258
SILOE 276
TOBIA 294
SIMON 312
ELIA 330
PIETRO 340



GIORGIO - ROSA 376
VIVI 400 380
ECOVIVI 400 390
BEPPE 400 398
ECOBEPPE 400 408
REMO 400 416







LUIGI 400-DR 484
LUIGI 400 486
LUIGI 500 488



ESTER 34
ESTER WALL 36
ELISA 38
ELISA WALL 40
SAURO LED 42
SAURO E27 46
NARDO 49
STUCCHI 96
CECCHI 100
RITA 104
LUCIA 108
REMI/LUCIA 112
MADDI 114
REMI/MADDI 118
PINELA 142
GIOVA/GIUSEPPE 144
GIUSEPPE 148
PINA 150
LETI 200 176
LETI 300 180
EXTRALETI 100 ROUND 184
EXTRALETI 100 SQUARE 188
EXTRALETI 200 192
EXTRALETI 300 196
IESSE 238
DARIA 240
GLOBE 250 classic 232
GLOBE 300 classic 246
GLOBE 300 modern 252
GLOBE 400 classic 350
GLOBE 500 classic 362
CANA 500 368
GINO 400 424
VIVI 500 432
ECOVIVI 500 440
BEPPE 500 448
ECOBEPPE 500 454
REMO 500 460
GINO 500 466
CLASSIC POSTS 494
MODERN POSTS 502
LAMPS
E27 HIGH POWER LED 514
E27 FILAMENT LED 516
GX53 LED 518
GU10 LED 524

1973 1984 1999

1972 1974 1975 1976 1977 1978 1979 1980 1981 1982 1983 1985 1986 1987 1988 1989 1990 1991 1992 1993 1994 1995 1996 1997 1998 2000







la bottega dei maestri forgiatori

fumagalli
italian lux

fumagalli®
since 1973

Thanks to the enterprise of Mr. Fumagalli Giancarlo, in 1973 an individual company called "La Bottega dei Maestri Forgiatori" was born in Varese (north of Italy) specialising itself in the artistic handwork of wrought iron indoor lightings.
After five years of activity the company started to employ some workers and to open itself to foreign markets, in particular to the Japanese one.

Nasce a Varese, su iniziativa del Sig. Fumagalli una ditta individuale con il nome di "La Bottega dei Maestri Forgiatori", specializzata nella lavorazione artistica del ferro forgiato a mano.
La produzione è costituita da lampade da interno. Dopo cinque anni l'azienda aprendo verso mercati esteri (in particolare il Giappone), inizia ad assumere i primi dipendenti.

An intuition of Mr.Fumagalli lead the company to an evolution, creating an innovative outdoor lightings production system, consisting of a galvanized steel tube covered by resin material.
After some years of experimentation and the setting-up of adeguate machineries, the product started to be appreciated all over the world.

Un'intuizione del Sig. Fumagalli porta l'azienda ad un'evoluzione, creando un ingegnoso processo produttivo di lampade da esterno, costituito da un'anima in acciaio galvanizzato rivestito in resina.
Dopo anni di sperimentazioni e la faticosa messa a punto di un'attrezzatura adeguata, il prodotto comincia ad essere distribuito ed apprezzato in tutto il mondo.

Fumagalli family decides to turn the individual company into a limited company, going on with the manufacturing of "composite material" outdoor lighting fixures.
The articles range increased thanks to the creation of many new models and the production capacity was multiplied by the use of computerized machineries. The recent settlement in the new company seat had definitively made Fumagalli S.r.l. a worldwide leading company in the manufacturing of resin material outdoor lightings.

Subentrando alla ditta individuale, la famiglia Fumagalli decide di costituirsi in società, continuando la fabbricazione di lampade da esterno in materiale composito. Con la creazione di nuovi modelli viene ampliata l'offerta e con attrezzature robotizzate viene moltiplicata la produttività. La sistemazione nella nuova sede rende la società Fumagalli leader mondiale nel suo settore.

SMART FACTORY

2019

2001 2002 2003 2004 2005 2006 2007 2008 2009 2010 2011 2012 2013 2014 2015 2016 2017 2018

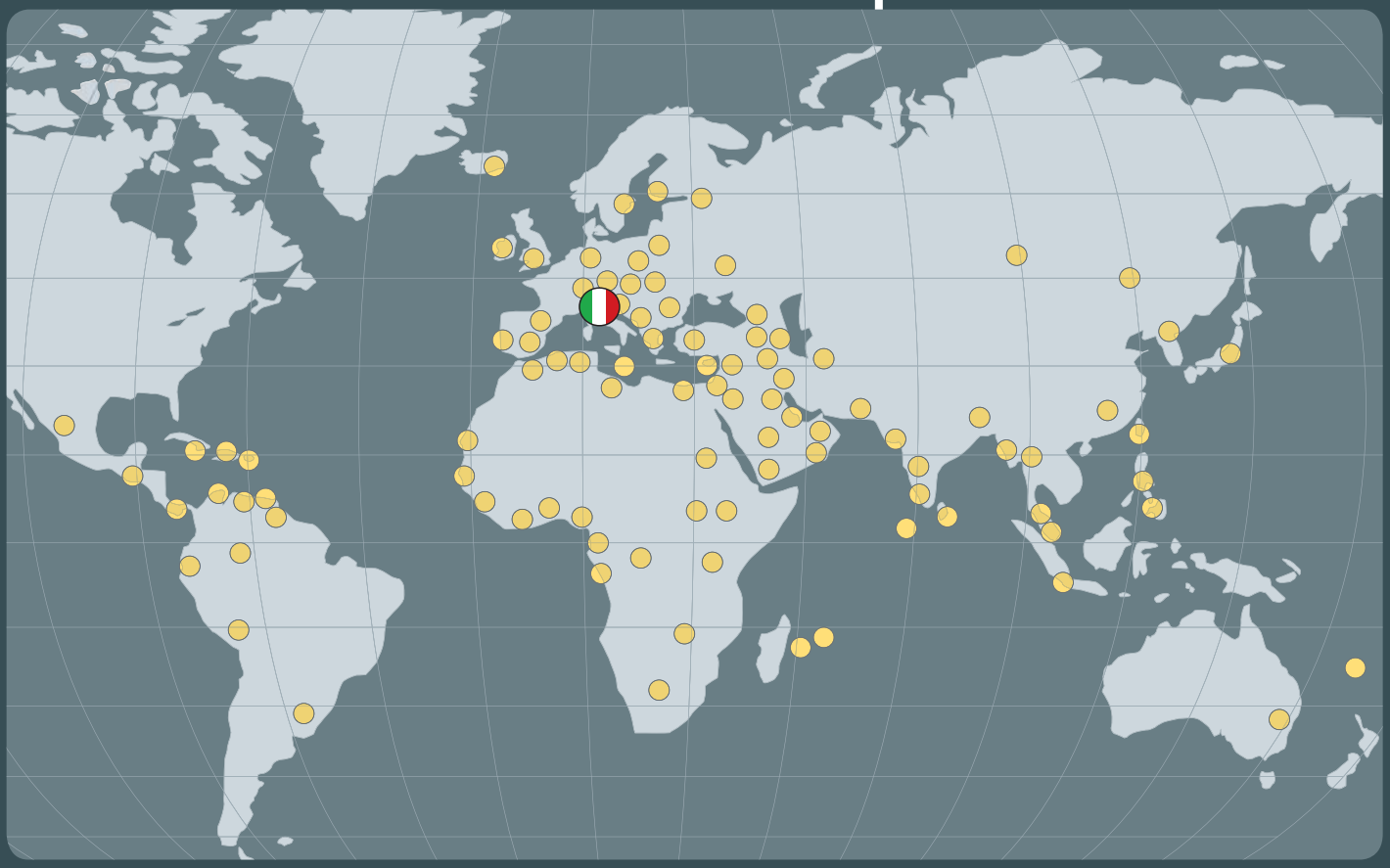

137

DISTRIBUTORS ALL OVER THE WORLD

MADE IN ITALY

COMPANY

PLANT

We are proud to define ourselves as a "pure Italian manufacturer": all our products are strictly manufactured inside our factory located in Varese (Italy), enabling us to have a full control about the quality and performance of our products.

Siamo orgogliosi di poterci definire come fabbricanti italiani "puri": tutti i nostri prodotti sono rigorosamente fabbricati all'interno dei nostri stabilimenti di Varese (Italia), permettendoci così di esercitare un pieno controllo sulla qualità e sulle prestazioni dei nostri prodotti.



FACTORY



Member of
CONFEDERATION OF
ITALIAN INDUSTRY
ISO 9001:2015

ISO 9001:2015

SCESm 001





WAREHOUSE

INDUSTRY 4.0

SMART FACTORY

A DIGITAL ENTERPRISE

In our company, product and production technologies are developed in a complete digital environment, to get an advanced manufacturing process fully automated and interconnected.

UN'AZIENDA DIGITALE

Nella nostra azienda prodotto e tecnologie produttive vengono sviluppati in un ambiente completamente digitale, per ottenere un avanzato processo di fabbricazione interamente automatizzato ed interconnesso.

- INCREASED PRODUCTIVITY
- COST REDUCTION
- IMPROVED QUALITY CONTROL

REAL TIME DATA EXCHANGE



MONITORING ON-LINE



MACHINERIES AND DEVICES INTERCONNECTION

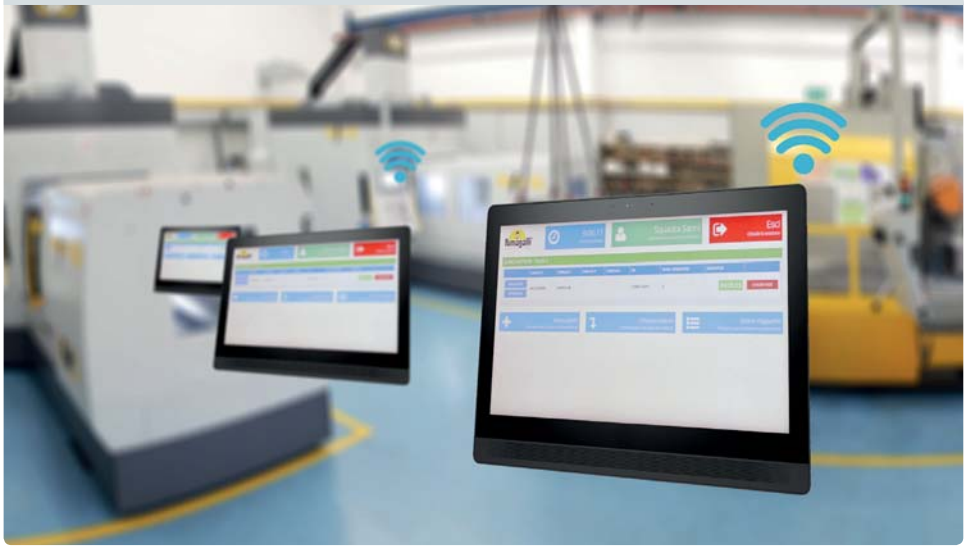

PURE ITALIAN MANUFACTURER

Inside the following different departments of our company we can manage the whole product development process from the initial design to the fully-finished product.

PURI FABBRICANTI ITALIANI

All'interno dei seguenti dipartimenti della nostra azienda possiamo gestire l'intero processo di sviluppo del prodotto, dall'idea iniziale al prodotto realizzato.

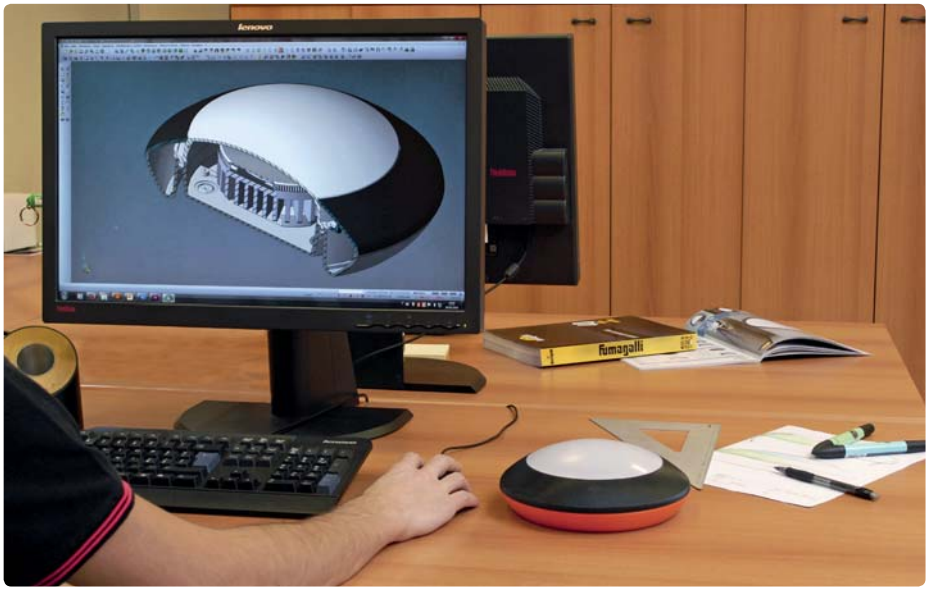

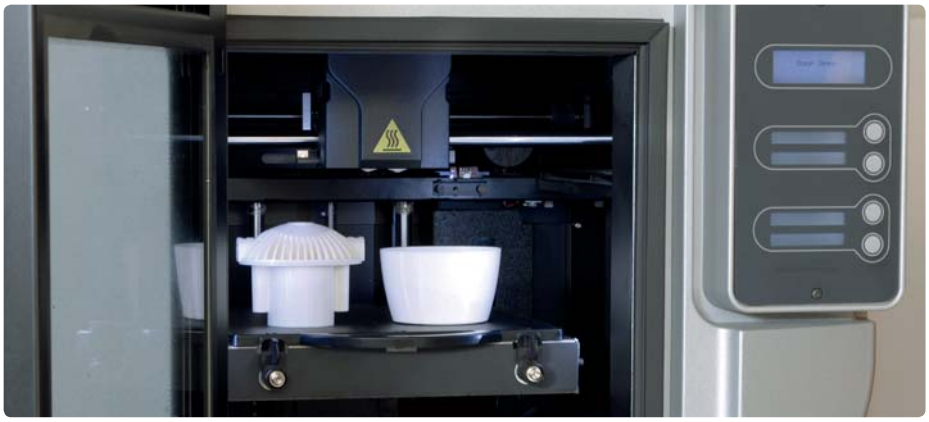

R&D DEPARTMENT 3D PROTOTYPING

Product planning and design through the most advanced 3D modelling software, CAD systems and modern multimedia. Product engineering and prototypes creation with the most advanced 3D printers.

RICERCA E SVILUPPO PROTOTIPAZIONE 3D

Progettazione e disegno del prodotto attraverso i software più avanzati di modellazione 3D, di sistemi CAD e di multimedia moderni. Ingegnerizzazione del prodotto e creazione di prototipi con le più avanzate stampanti 3D.

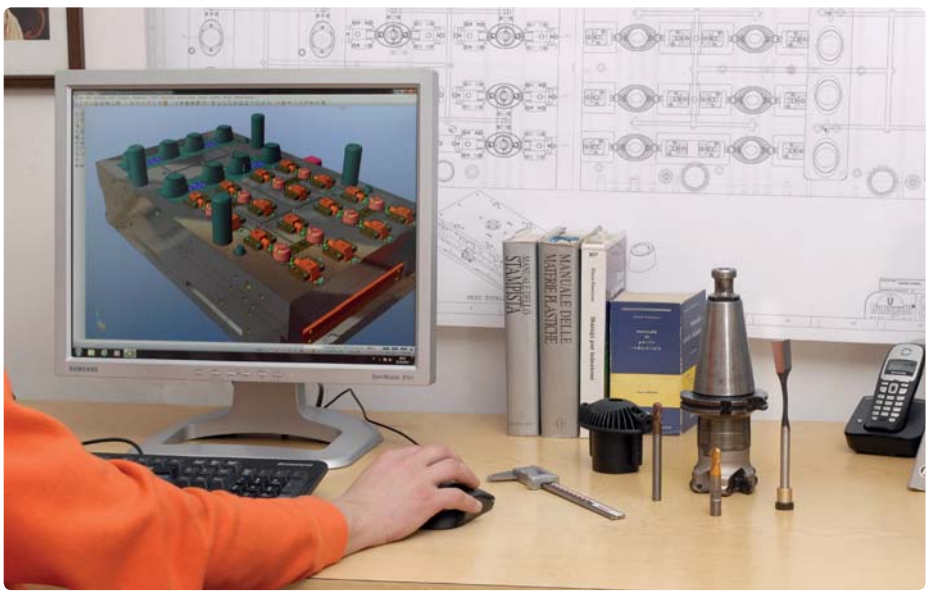

TECHNICAL DESIGN DEPARTMENT

Mould design and engineering, toolpath programming through the most advanced 3D software directly connected to the CNC workstations.

SEZIONE PROGETTAZIONE STAMPI

Progettazione e ingegnerizzazione degli stampi, studio dei percorsi utensile, attraverso i più avanzati software 3D direttamente collegati alle postazioni di lavoro CNC.

COMPANY

PRODUCT DEVELOPMENT



MOULD CONSTRUCTION DEPARTMENT

New hi-tech work stations, working only for the construction of our moulds, enable us to update constantly our collection with new products manufactured in accordance with the most advanced lighting solutions. An internal mould construction division means also full control on the quality of our product in all its details and a continous and regular maintenance of the many existing moulds.

REPARTO COSTRUZIONE STAMPI

Nuovi centri di lavoro dedicati esclusivamente alla costruzione dei nostri stampi, ci permettono di aggiornare costantemente la nostra collezione con numerosi prodotti nuovi, fabbricati secondo le più moderne tecnologie e in accordo con le più recenti soluzioni illuminotecniche. Una divisione interna per la costruzione degli stampi significa anche totale controllo sulla qualità del prodotto nei suoi minimi dettagli e possibilità di effettuare una regolare e costante manutenzione sui numerosi stampi esistenti.





CNC WORKSTATION



WIRE ELECTRICAL DISCHARGE MACHINE


CNC SURFACE GRINDER


CNC WORKSTATION



COMPANY

FACTORY



RESIN INJECTION


RESIN INJECTION



RESIN INJECTION



RESIN INJECTION

INDUSTRIAL PRODUCTION PROCESS IN DIFFERENT PHASES

A successful synergy between the decades-long experience of a qualified staff and the use of modern automatic machineries with the most updated technologies.

PROCESSO DI PRODUZIONE INDUSTRIALE IN DIVERSE FASI

Un'efficace sinergia tra la decennale esperienza di personale qualificato e l'utilizzo di macchinari automatici dotati delle più moderne tecnologie.



RESIN DRYERS AND DEHUMIDIFIERS


PLASMA CUTTING MACHINE


BLACK STEEL WELDING


GALVANIZED STEEL POLES STOCK


RESIN EXTRUSION


EXPANSE

COMPANY

WAREHOUSE

WAREHOUSE

Fumagalli stock of raw materials, components and semi-finished products is maintained at the best levels to ensure prompt delivery of standard products and fast preparation of special or large quantity orders.

MAGAZZINO

Lo stock Fumagalli di materie prime, componenti e semi-lavorati viene mantenuto a livelli ottimali per assicurare pronte consegne dei prodotti standard ed una veloce esecuzione di richieste speciali o per grandi quantità.



RESIN RAW MATERIAL STOCK

COMPONENTS STOCK



READY POLES STOCK

Stock for projects poles to ensure quick deliveries

3200 poles 2,5mt, 3mt, 4mt, 5mt high- Colours: Classic poles in black. Modern poles in grey.





COMPANY

WAREHOUSE

ASSEMBLY AND ELECTRIFICATION dept.

The assembly, electrification and packing department allows us to ship the products ready for installation to meet customer's needs.

REPARTO DI ASSEMBLAGGIO ED ELETTRIFICAZIONE

Il reparto di assemblaggio, elettrificazione ed imballaggio ci consente di spedire i nostri prodotti già pronti per l'installazione e personalizzati secondo le necessità del cliente.






BOX STOCK


PACKING


GOODS READY FOR SHIPMENT





FUMATECH

FUMAGALLI POLES TECHNOLOGY

Fumagalli **created** and developed a unique post technology, registered as **FUMATECH**. Fumatech technology grants to our lamps the same strength features of a metal post, combined with all the advantages in terms of rust and corrosion resistance that only a resin material can offer.

*L'azienda Fumagalli ha **creato** e sviluppato un'esclusiva tecnologia per la fabbricazione dei pali, registrata come **FUMATECH**. La tecnologia FUMATECH assicura alle nostre lampade le medesime caratteristiche di solidità di un palo in metallo, con tutti i vantaggi in termini di resistenza alla ruggine e alla corrosione che solo la resina può offrire.*

fumaTech®
FUMAGALLI POLES TECHNOLOGY

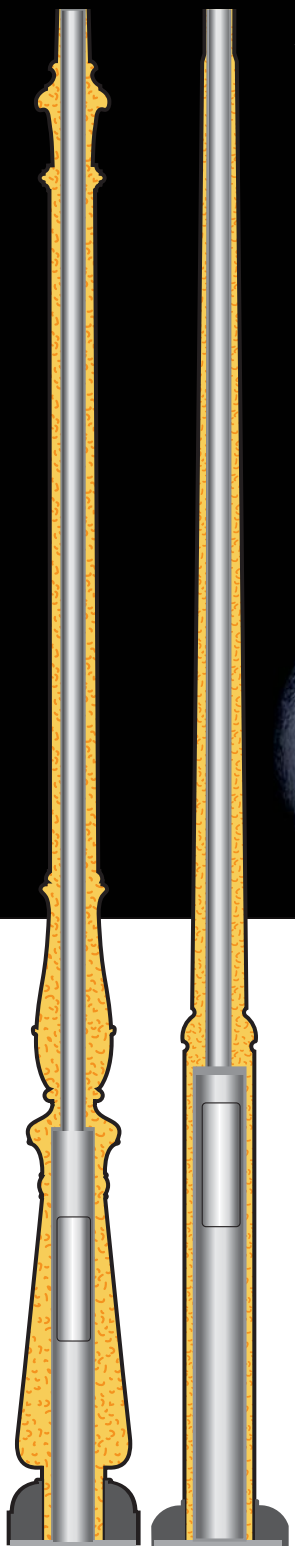

METAL POST COVERED BY RESIN

46 YEARS EXPERIENCE



- ✓ Protected against corrosion. *Inattaccabile dalla corrosione.*
- ✓ Not-fading colours (UV-rays stabilized). *Colori inalterati nel tempo (stabilizzati ai raggi UV).*
- ✓ Double insulated. *Doppio isolamento.*
- ✓ Rigid and shockproof. *Rigido e resistente agli urti.*
- ✓ Fireproof. *Ignifugo.*
- ✓ Light and easy to transport. *Leggero e facile da trasportare.*
- ✓ Manufactured according to European Community's standards. *Fabbricato secondo le norme della Comunità Europea.* CE
- ✓ High quality resin polymer sourced in Europe. *Resina polimerica di alta qualità fabbricata in Europa.*

1 **INNER METAL POLE STRUCTURE**
Structural metal pole hot deep galvanized inside and outside by zinc bath immersion.

2 **OUTER RESIN COVER**
Outer coating of a **single piece without joints** made of shockproof resin material:
- Rust and corrosion-free
- Paste molded colors, UV stabilized
- Self-extinguishing on fire

3 **EXPANSE**
High Density rigid polyurethane provides lightweight and durable cohesion between the inner metal post and the outer resin cover.



MADE IN ITALY



ANTI CORROSION

Thanks to the outer resin material, Fumagalli lamps are protected against rust and corrosion, even if subjected to saline or polluted environments.
Grazie alla resina esterna le lampade Fumagalli sono protette da ruggine e corrosione, anche se esposte ad ambienti salini o inquinati.



NO MAINTENANCE

The colour of the outer resin coating is molded in the paste of material to grant the maximum durability over the time.
No re-painting will ever be necessary.
Il colore della resina esterna è nella pasta stessa del materiale, per garantire la massima durata nel tempo. Non sarà più necessaria alcuna riverniciatura.



UV-RAYS STABILIZED

Fumagalli products are made of UV stabilized materials to avoid color fading of the outer surface under the sun. Ideal in hot and cold climate.
I prodotti Fumagalli sono realizzati con materiali stabilizzati agli UV per evitare che il colore della superfice esterna sbiadisca con il sole.



SAFE

CLASS II

The outer resin coating of Fumagalli products isolates the lamp from electrical discharges (double insulation Class II).

Il rivestimento esterno dei prodotti Fumagalli rende la lampada isolata dalle scariche elettriche (doppio isolamento Classe II).



UNAFFECTED BY CHEMICAL FERTILIZERS

Fumagalli lamps are not affected by chemical fertilizer or pollutants.

Le lampade Fumagalli non sono soggette a deterioramento dovuto a fertilizzanti chimici od agenti inquinanti.

ANTI RUST
LIFETIME GUARANTEE
NO PAINTING REQUIRED
MADE IN ITALY



CERTIFIED QUALITY

ISO 9001:2015

In order to assure the reliability of its manufacturing and marketing process, the company Fumagalli Srl has implemented and maintains a management system, which meets the requirements of the standard **ISO 9001:2015**, as certified by The International Certification Network **IQNET**, which is the largest provider of management system certification in the world, and by the Swiss Association for Quality and Management Systems **SQS**.

*Per garantire l'affidabilità del proprio processo produttivo e commerciale, la ditta Fumagalli Srl possiede e mantiene un sistema di gestione aziendale che soddisfa i requisiti della norma **ISO 9001:2015**, come certificato sia dall'International Certification Network **IQNET**, che è il più grande organismo al mondo preposto a certificare sistemi di gestione per la qualità, sia dall'Associazione Svizzera per Sistemi di Qualità e di Managment **SQS**.*


IQNet
THE INTERNATIONAL CERTIFICATION NETWORK
CERTIFICATE
IQNet and SQS hereby certify that the organisation
Fumagalli S.r.l.
Via Cà Bassa, 29
21100 Varese (VA)
Italia
Certified area
Whole site
Field of activity
Engineering, manufacturing and sales of outdoor lighting fixtures and components made by composite material
has implemented and maintains a Management System


SQS
Certificate
SQS herewith certifies that the company named below has a management system which meets the requirements of the standard specified below.
Fumagalli
Fumagalli S.r.l.
Via Cà Bassa, 29
21100 Varese (VA)
Italia
Certified area
Whole site
Field of activity
Engineering, manufacturing and sales of outdoor lighting fixtures and components made by composite material
Standard

Fumagalli products obtained also the C-UL-US certification Mark, as they meet the United States National Standard for Luminaires UL1598 and the Canadian National Standard for Luminaires CSA C22.2 No. 250.0.
Fumagalli company is officially registered as a UL classified manufacturer and, upon request, a copy of the UL Certificate of Compliance can be provided to Fumagalli customers, together with the report about the following tests conducted on Fumagalli products: Grounding Continuity Test, Normal Temperature Test, Dielectric Voltage-Withstand Test, Rain Test, Sprinkler Test.

I prodotti Fumagalli hanno ottenuto in via definitiva anche la certificazione C-UL-US, essendo conformi agli standard statunitensi UL1598 per apparecchi illuminanti e agli standard canadesi CSA C22.2 No. 250.0.
La ditta Fumagalli è stata ufficialmente registrata all'interno dell'albo dei fabbricanti certificati UL e, su richiesta, una copia del certificato di conformità UL può essere fornito a tutti i clienti Fumagalli, insieme con i report dei seguenti test condotti sui prodotti Fumagalli: Grounding Continuity Test, Normal Temperature Test, Dielectric Voltage-Withstand Test, Rain Test, Sprinkler Test.


Certificate of Compliance
Underwriters Laboratories Inc.
Issued to: Fumagalli S.r.l.
Via Ca Bassa 29
I-21100 Varese Italy
This is to certify that representative samples of Incandescent Luminaires
Surface-Mounted, Wet Locations
Have been investigated by Underwriters Laboratories Inc.® in accordance with the Standard(s) indicated on this Certificate.
Standard(s) for Safety: UL 1598 - Luminaires
CSA C22.2 No. 250.0 - Luminaires
Additional Information: Not Applicable

All Fumagalli products are manufactured according to the most updated international standards and regulation and are CE marked in order to ensure to our worldwide customers the highest levels of quality in the full respect of enviroment and person.

Tutti i prodotti Fumagalli sono fabbricati secondo le più aggiornate norme e standard internazionali e sono marcati CE, in modo da assicurare ai nostri clienti in tutto il mondo i più alti livelli di qualità nel pieno rispetto dell'ambiente e delle persone.

With the aim of offering to our customers very reliable and safe LED solutions with certified quality and certified performances, all Fumagalli LED lamps (GX53, GU10, E27) obtained the prestigious TÜV SÜD German certification mark, which includes the following certifications:
- TÜV Certificate of Compliance: Fumagalli lamps comply with the international standards EN 60968:2015, EN 62031:2008, IEC/TR 62778:2014, IEC 62560:2012/A1:2015, EN 62493:2015.
- EMC Certificate: Fumagalli lamps meet the Electromagnetic Compatibility Directive 2014/30/EU
- LVD Certificate: Fumagalli lamps fulfil the Low Voltage Directive 2014/35/EU, therefore are CE marked and comply with safety requirements like protection against electrical shock, moisture and heat resistance, resistance to flame and ignition.
- ERP Attestation of conformity: Fumagalli lamps fulfil the European Ecodesign Directive 2009/125/EC about the energy performance requirements of energy related products.

Al fine di offrire ai nostri clienti soluzioni a Led affidabili e sicure con qualità e prestazioni certificate, tutte le lampadine a LED Fumagalli (GX53, GU10, E27) hanno ottenuto la prestigiosa certificazione TÜV SÜD,che comprende le seguenti certificazioni:
-Certificato di Conformità TÜV: le lampadine Fumagalli sono conformi ai seguenti standard internazionali: EN 60968:2015, EN 62031:2008, IEC/TR 62778:2014, IEC 62560:2012/A1:2015, EN 62493:2015.
-Certificato EMC: le lampadine Fumagalli rispettano la Direttiva di Compatibilità Elettromagnetica 2014/30/EU.
-Certificato LVD: le lampadine Fumagalli rispettano la Direttiva Bassa Tensione 2014/35/EU, sono perciò marchiate CE e conformi a requisiti di sicurezza quali protezione contro scosse elettriche, resistenza al calore e all'umidità, resistenza alla fiamma e alle accensioni.
-Certificato di Conformità ERP: le lampadine Fumagalli sono conformi alla Direttiva europea 2009/125/EC sulla progettazione ecocompatibile che stabilisce i requisiti di prestazione energetica (ERP) dei prodotti conessi all'energia.





COMPANY

TECHNICAL ASSISTANCE

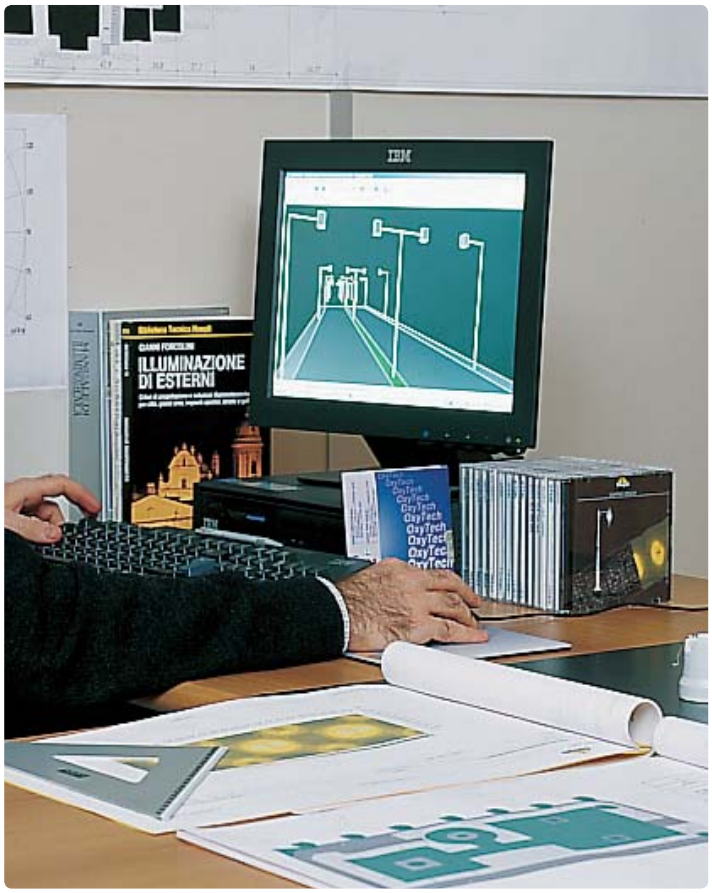

A specialized team of lighting professionals is permanently at our customers' disposal to provide a qualified product technical support, to supply lighting diagrams and to give advice about the optimal article selection and light sources distribution, according the customer's needs.
In addition, our technical division can provide at any time the following information and services to our worldwide customers:

- photometric data for all Fumagalli diffusers with different wattages: they are available on request in eulumdat, iesna 86/91/95, cibse\1, ltli
- calculation of the average horizontal luminance and of the isolux curves at a given high level
- wind load calculations

From Fumagalli web site www.fumagalli.it it's possible to download the technical specification and the photometric data in .eulumdat or .ies format of all Fumagalli luminaries.

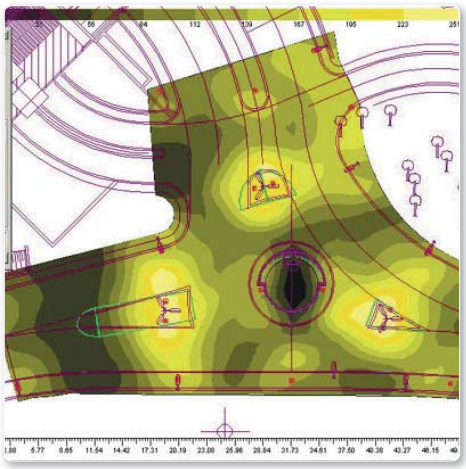



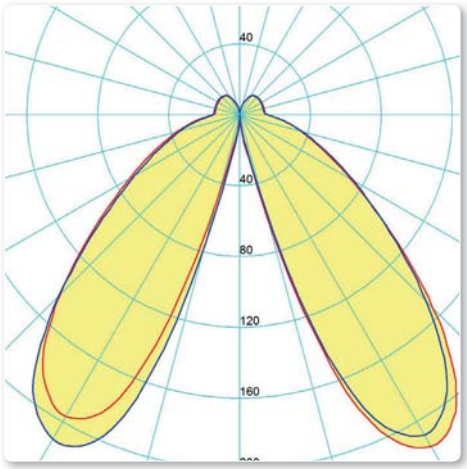

Un team dedicato di professionisti della luce è permanentemente a disposizione dei nostri clienti per fornire un qualificato supporto tecnico relativo al prodotto, per elaborare studi fotometrici e per fornire consigli sulle soluzioni ottimali relative alla selezione degli articoli e alla distribuzione delle sorgenti luminose in una data area.
In aggiunta, il nostro dipartimento tecnico può fornire in ogni momento ai nostri clienti in tutto il mondo le seguenti informazioni e servizi:

- *dati fotometrici di tutti i diffusori Fumagalli con diversi wattaggi: questi sono disponibili su richiesta nei formati eulumdat, iesna 86/91/95, cibse\1, ltli*
- *calcolo dell'illuminamento medio orizzontale e delle curve isolux ad una data altezza*
- *calcoli relativi alla resistenza al vento*

È possibile scaricare dal sito Fumagalli www.fumagalli.it le schede tecniche e le fotometrie di tutti i diffusori Fumagalli in formato .eulumdat o .ies.

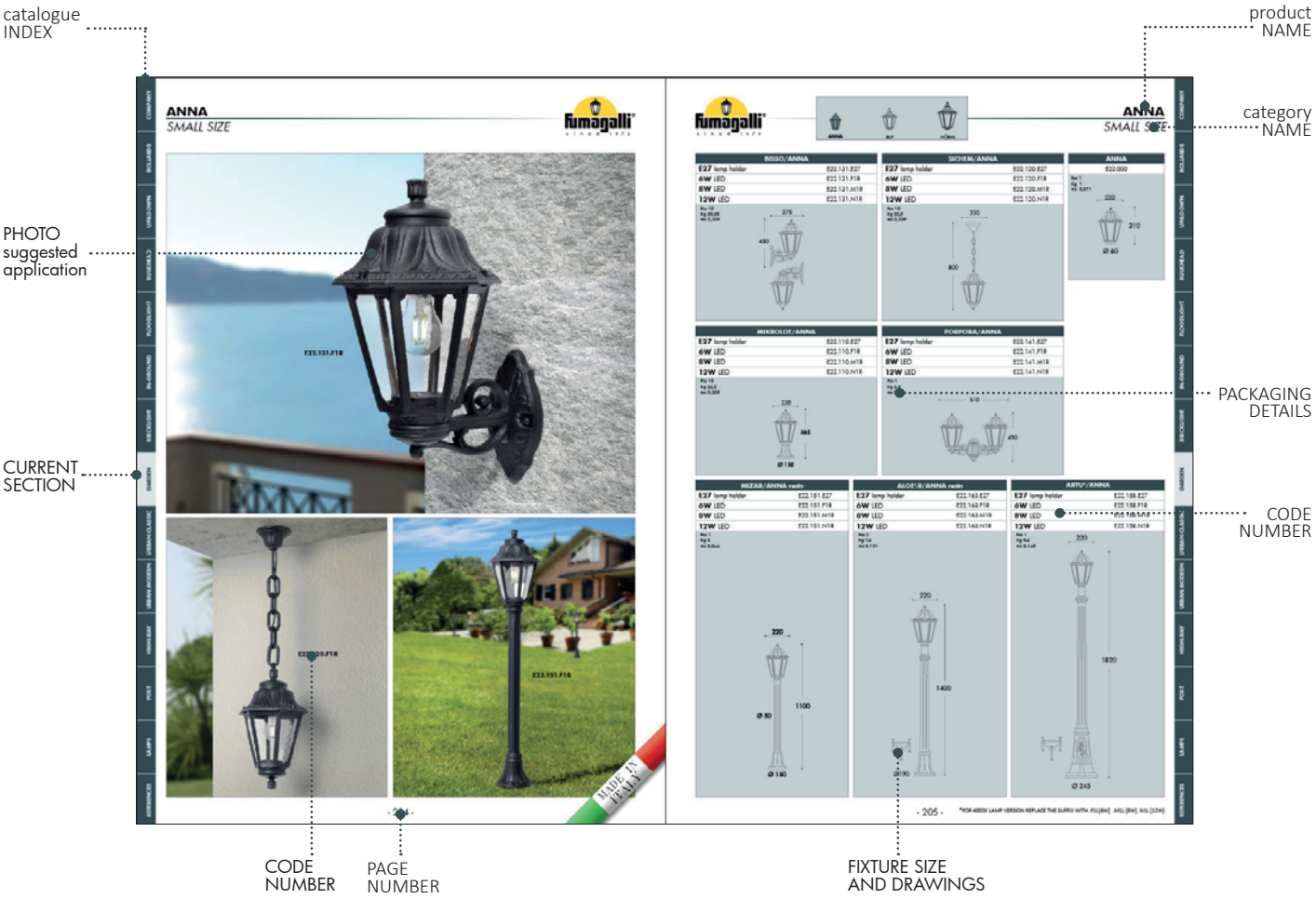

HOW TO READ THE CODES

IDENTIFIES THE **COLOUR OF THE STRUCTURE**

BLACK	A
WHITE	W
GREY	L
ANTIQUE GREEN*	V
ANTIQUE BRONZE*	B

IDENTIFIES **THE COLOUR OF THE DIFFUSER** OR THE GLOBE

X	CLEAR / FROSTED
Y	OPAL (milky white)
Z	SMOKED (for globes only)
N	GREEN
R	ORANGE
U	BLUE

IDENTIFIES THE **STRUCTURE** ON WITCH THE DIFFUSER IS MOUNTED (POLE, BRACKET, BASE)

Q43 . 223 . N40 . V Y E27 FC6

IDENTIFIES THE **DIFFUSER**

IDENTIFIES THE MULTI-LIGHT **SYSTEM** IF PRESENT

IDENTIFIES THE TYPE OF **ELECTRIFICATION** AND THE EVENTUAL PRESENCE OF **LED LAMPS**

VARIANT- IDENTIFIES THE PRESENCE OF COMPONENTS SUCH AS AN EVENTUAL LOUVRE OR BACKLIT BASE ON THE BULKHEAD RANGE

** hand-made painted colour*

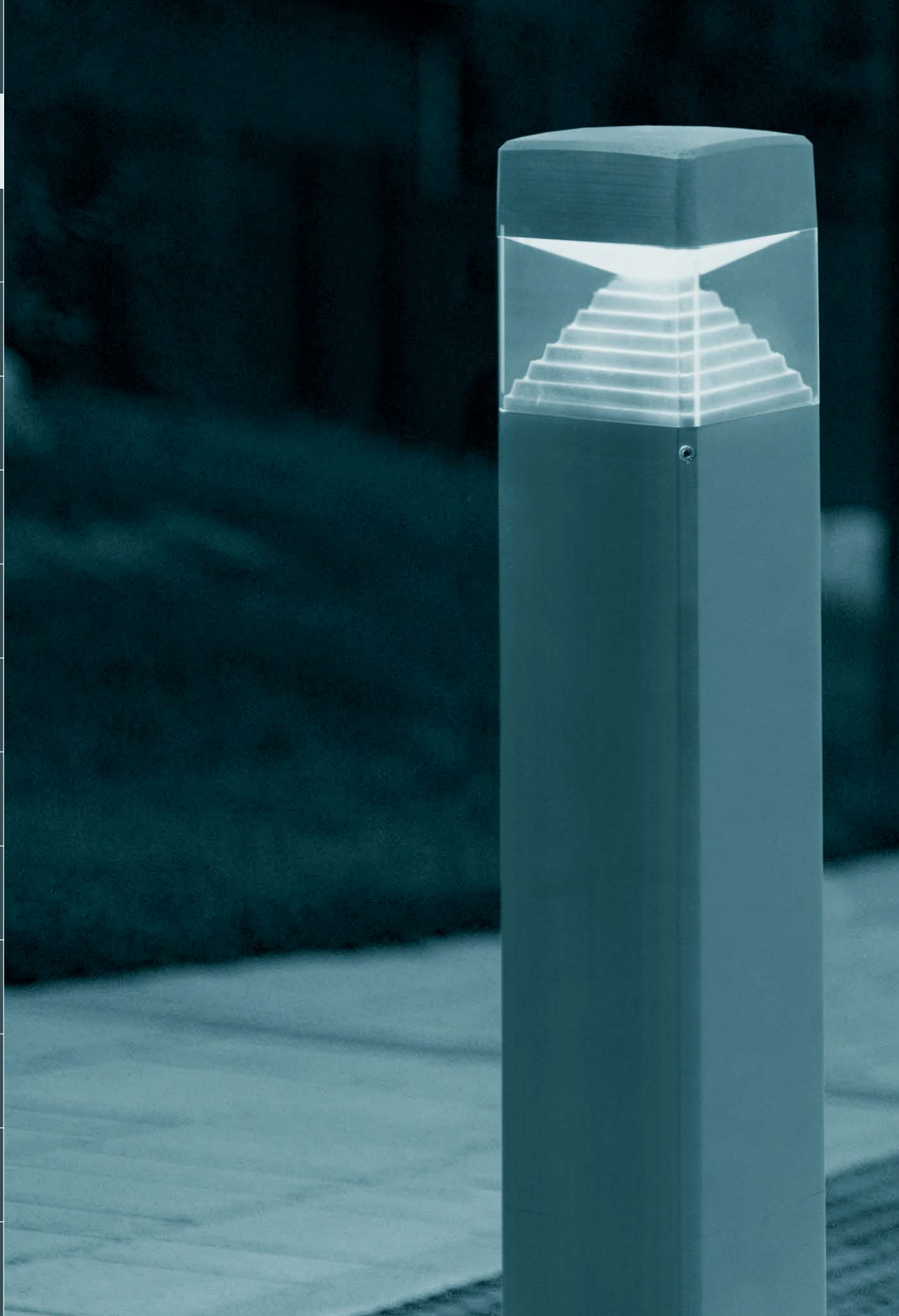



BOLLARD

CARLO

MODERN BOLLARD

LED lamp range in modern style, made of shockproof resin material, UV-rays stabilized, rust and corrosion-free. Round bollards in different sizes, spike and wall mounted versions available. Provided with double PMMA diffusers to gather the lighting output and get its uniform spread. Supplied as standard with TÜV approved, long-life and efficient **GU10 LED lamp included**. Insulation class II, protection rating IP55.

*Collezione di lampade a LED in stile moderno, realizzata in resina antiurto, stabilizzata ai raggi UV, inattaccabile da ruggine e corrosione. Ampia gamma di versioni disponibili per istallazioni su stelo bollard in diverse altezze, con picchetto o a parete. Lampada provvista di un doppio diffusore in metacrilato per raccogliere il fascio di luce e garantirne un'uniforme distribuzione. Fornita con **inclusa lampadina a LED GU10**, approvata TÜV di lunga durata ed elevata efficienza. Classe di isolamento II, grado di protezione IP55.*

DR1.575.U1L

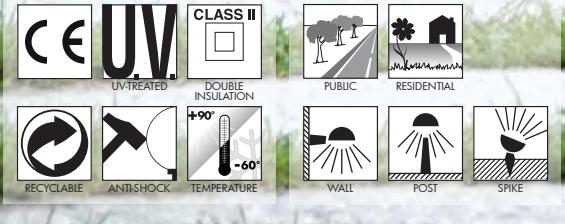

MADE IN ITALY

CARLO COMPONENTS

IP55



CAP fixed to the diffuser with no visible screws made of shockproof resin material, UV-rays stabilized, rust and corrosion-free.

CALOTTA *fissata al diffusore senza viti a vista, realizzata in resina antiurto, stabilizzata ai raggi UV, inattaccabile da ruggine e corrosione.*

OUTER DIFFUSER in clear colour made of UV-rays stabilized polymethylmethacrilate (PMMA) provided with silicone rubber gasket to ensure high protection against external agents.

DIFFUSORE ESTERNO *in colore trasparente realizzato in polimetilmetacrilato (PMMA) resistente all'ingiallimento ed ai raggi UV. Fornito completo di guarnizione in gomma siliconica per garantire un alto livello di protezione contro gli agenti esterni.*

INNER DIFFUSER made of opal PMMA to gather the lighting output and get its uniform spread.

DIFFUSORE INTERNO *realizzato in PMMA opale per raccogliere il fascio di luce e garantirne un'uniforme distribuzione.*



CONNECTION RING made of shockproof resin material, provided with GU10 lampholder.

GHIERA *di raccordo realizzata in resina antiurto fornita completa di portalampada GU10.*



INSTALLATION ELEMENTS:
-POLES for bollard versions
-BRACKETS for wall mounted versions
-SPIKE for in ground installation

ELEMENTI DI FISSAGGIO:
-STELI per versione bollard
-SUPPORTI per installazione a parete
-PICCHETTO per istallazione nel terreno

CARLO



Dimensions
Diameter: Ø100mm
Height: 250/400/800 mm

Moulded colours:
Black *White*
Grey

Outer Diffuser PMMA:
Clear

Inner Diffuser PMMA:
Opal

GU10 LED



				*ADD. SUFFIX
GU10 LED	3,5W	400 Lm	4000 K	.U1L
			3000 K	.U1R

Bollard supplied as standard with TÜV approved, long-life and efficient **GU10 LED lamp included**. Quick and easy lamp replacement for a very simple maintenance after installation.

- **COST SAVING:** long-life and efficient LED light sources
- **BUILT-IN DRIVER:** quick and easy lamp replacement
- **GREAT FLEXIBILITY:** GU10 standard lamp holder
- **FUTURE-PROOFED LUMINARIES:** performances easy to upgrade to latest technology developments
- **SUITABLE FOR OUTDOOR USE:** built-in driver fully protected against heat and humidity by silicone paste.

3,5W
400 Lm

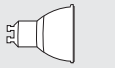

=

50W
halogen



SAVE 92%

LED LAMPS

More technical details about TÜV approved Fumagalli LED Lamps on page 512.

** ADD THESE SUFFIXES TO THE REFERENCES MENTIONED IN THE CATALOGUE*

CARLO

MODERN BOLLARD


DR1.570.U1L


DR1.571.U1L


DR1.573.U1L


DR1.575.U1L


DR1.574.U1L



CARLO

MODERN BOLLARD

CARLO 800

DR1.575.U1L **3,5W** DR1.575.U1R

4000K GU10 LED LAMP INCLUDED *3000K*

Pcs 6
Kg 15
mc 0,147

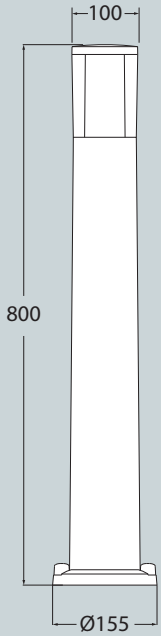

CARLO 400

DR1.574.U1L **3,5W** DR1.574.U1R

4000K GU10 LED LAMP INCLUDED *3000K*

Pcs 12
Kg 22,5
mc 0,147

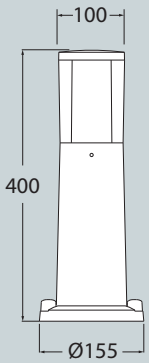

CARLO 250

DR1.573.U1L **3,5W** DR1.573.U1R

4000K GU10 LED LAMP INCLUDED *3000K*

Pcs 20
Kg 21
mc 0,121

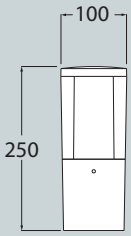

CARLO-FS

DR1.571.U1L **3,5W** DR1.571.U1R

4000K GU10 LED LAMP INCLUDED *3000K*

Pcs 20
Kg 21
mc 0,121

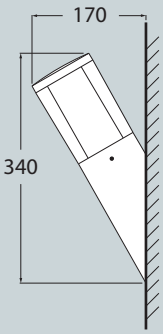

CARLO WALL

DR1.570.U1L **3,5W** DR1.570.U1R

4000K GU10 LED LAMP INCLUDED *3000K*

Pcs 20
Kg 21
mc 0,121

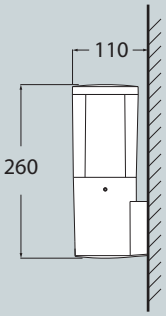

CARLO SPIKE

DR1.572.U1L **3,5W** DR1.572.U1R

4000K GU10 LED LAMP INCLUDED *3000K*

Pcs 20
Kg 21
mc 0,121

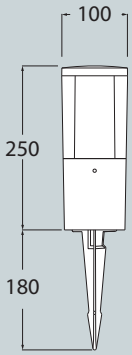

AMELIA

MODERN BOLLARD

LED lamp range in modern style, made of shockproof resin material, UV-rays stabilized, rust and corrosion-free. Round bollards in different sizes, spike and wall mounted versions available. Provided with opal PMMA diffuser to get a uniform light distribution. Supplied with TÜV approved, long-life and efficient **E27 LED filament lamps** suitable for outdoor use **included**. Insulation class II, protection rating IP55.

*Collezione di lampade a LED in stile moderno, realizzata in resina antiurto, stabilizzata ai raggi UV, inattaccabile da ruggine e corrosione. Ampia gamma di versioni disponibili per istallazioni su stelo bollard in diverse altezze, con picchetto o a parete. Lampada provvista di diffusore in metacrilato opale che garantisce un'uniforme distribuzione della luce. Fornita con **incluse lampadine LED a filamento E27** adatte ad uso in ambiente esterno, approvate TÜV, di lunga durata ed elevata efficienza. Classe di isolamento II, grado di protezione IP55.*



MADE IN ITALY

AMELIA COMPONENTS

IP55



CAP fixed to the diffuser with no visible screws made of shockproof resin material, UV-rays stabilized, rust and corrosion-free.

CALOTTA *fissata al diffusore senza viti a vista, realizzata in resina antiurto, stabilizzata ai raggi UV, inattaccabile da ruggine e corrosione.*

DIFFUSER in opal colour to get a uniform light distribution. Made of UV-rays stabilized polymethylmethacrilate (PMMA) and provided with silicone rubber gasket to ensure high protection against external agents.

DIFFUSORE *in colore opale per garantire un'uniforme distribuzione della luce. Realizzato in polimetilmetacrilato (PMMA) resistente all'ingiallimento ed ai raggi UV, completo di guarnizione in gomma siliconica per garantire un alto livello di protezione contro gli agenti esterni.*

CONNECTION RING made of shockproof resin material, provided with E27 lampholder.

GHIERA *di raccordo realizzata in resina antiurto fornita completa di portalampada E27.*

INSTALLATION ELEMENTS:
-POLES for bollard versions
-BRACKETS for wall mounted versions
-SPIKE for in ground installation

ELEMENTI DI FISSAGGIO:
-STELI per versione bollard
-SUPPORTI per installazione a parete
-PICCHETTO per istallazione nel terreno

AMELIA



Dimensions
Diameter: Ø100mm
Height: 250/400/800 mm

Moulded colours:
Black *White* *Grey*

Diffuser PMMA:
Opal

E27 LED



FILAMENT LED E27

			*ADD. SUFFIX
6 W	800 Lm	4000 K	.F1L
		2700 K	.F1R
8 W	1000 Lm	4000 K	.M1L
		2700 K	.M1R
12 W	1500 Lm	4000 K	.N1L
		2700 K	.N1R

Bollard supplied as standard with TÜV approved, long-life and efficient **E27 LED filament lamp inlcuded**. Quick and easy lamp replacement for a very simple maintenance after installation.

- **SUITABLE FOR OUTDOOR USE**: 100-240 V built-in driver fully protected against heat and humidity by silicone paste.
- **OMNIDIRECTIONAL LIGHT**: 360° light output for a better lighting distribution.
- **HIGH EFFICIENCY**: 90% energy saving.



6W
8W
12W
=
60W
75W
100W
incandescent

SAVE 90%

LED LAMPS

More technical details about TÜV approved Fumagalli LED Lamps on page 512.

** ADD THESE SUFFIXES TO THE REFERENCES MENTIONED IN THE CATALOGUE*

AMELIA

MODERN BOLLARD











MADE IN ITALY



AMELIA

MODERN BOLLARD

AMELIA 800

DR2.575.F1L	**6W**	DR2.575.F1R
DR2.575.M1L	**8W**	DR2.575.M1R
DR2.575.N1L	**12W**	DR2.575.N1R

4000K E27 FILAMENT LED LAMP INCLUDED *2700K*

Pcs 6
Kg 15
mc 0,147

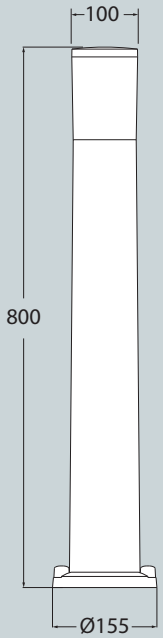

AMELIA 400

DR2.574.F1L	**6W**	DR2.574.F1R
DR2.574.M1L	**8W**	DR2.574.M1R
DR2.574.N1L	**12W**	DR2.574.N1R

4000K E27 FILAMENT LED LAMP INCLUDED *2700K*

Pcs 12
Kg 22,5
mc 0,147

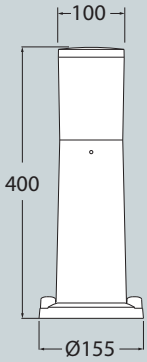

AMELIA 250

DR2.573.F1L	**6W**	DR2.573.F1R
DR2.573.M1L	**8W**	DR2.573.M1R
DR2.573.N1L	**12W**	DR2.573.N1R

4000K E27 FILAMENT LED LAMP INCLUDED *2700K*

Pcs 20
Kg 21
mc 0,121

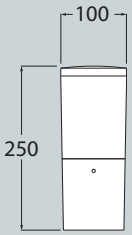

AMELIA-FS

DR2.571.F1L	**6W**	DR2.571.F1R
DR2.571.M1L	**8W**	DR2.571.M1R
DR2.571.N1L	**12W**	DR2.571.N1R

4000K E27 FILAMENT LED LAMP INCLUDED *2700K*

Pcs 20
Kg 21
mc 0,121

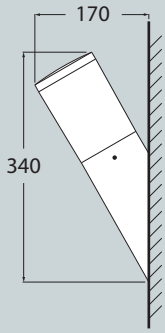

AMELIA WALL

DR2.570.F1L	**6W**	DR2.570.F1R
DR2.570.M1L	**8W**	DR2.570.M1R
DR2.570.N1L	**12W**	DR2.570.N1R

4000K E27 FILAMENT LED LAMP INCLUDED *2700K*

Pcs 20
Kg 21
mc 0,121

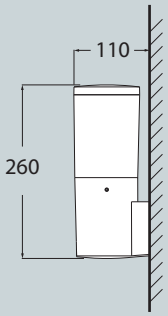

AMELIA SPIKE

DR2.572.F1L	**6W**	DR2.572.F1R
DR2.572.M1L	**8W**	DR2.572.M1R
DR2.572.N1L	**12W**	DR2.572.N1R

4000K E27 FILAMENT LED LAMP INCLUDED *2700K*

Pcs 20
Kg 21
mc 0,121

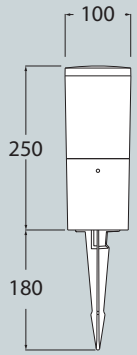

ESTER

MODERN BOLLARD

Architectural LED lamp range in modern style, made of shockproof resin material, UV-rays stabilized, rust and corrosion-free. Square bollards in different sizes, spike and wall mounted versions available. Supplied with stepped shape reflector and with TÜV approved, long-life and efficient **GX53 LED lamps included**. Insulation class II, Protection rating IP55.

*Collezione di lampade architetturali a LED in stile moderno, realizzata in resina antiurto, stabilizzata ai raggi UV, inattaccabile da ruggine e corrosione. Ampia gamma di versioni disponibili per istallazioni su stelo bollard quadro in diverse altezze, con picchetto o a parete. Provvista di riflettore a scaletta piramidale e fornita con **incluse lampadine a LED GX53** approvate TÜV di lunga durata ed elevata efficienza. Classe di isolamento II, grado di protezione IP55.*

DS1.564.D1L

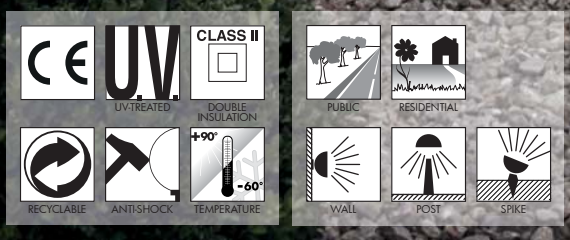

MADE IN ITALY

ESTER COMPONENTS

IP55



CAP fixed to the diffuser with no visible screws made of shockproof resin material, UV-rays stabilized, rust and corrosion-free.

CALOTTA *fissata al diffusore senza viti a vista, realizzata in resina antiurto, stabilizzata ai raggi UV, inattaccabile da ruggine e corrosione*

DIFFUSER in clear colour made of UV-rays stabilized polymethylmethacrilate (PMMA).

DIFFUSORE *trasparente realizzato in polimetilmetacrilato (PMMA) resistente all'ingiallimento ed ai raggi UV.*

REFLECTOR with stepped shape spreading the lighting output to emphasize the shape of the product. Made of shockproof resin material

RIFLETTORE *a scaletta piramidale che consente al fascio di luce di enfatizzare la sagoma del prodotto. Realizzato in resina antiurto.*



INSTALLATION ELEMENTS:
-POLES for bollard versions
-BASE for wall and surface installation
-SPIKE for in ground installation

ELEMENTI DI FISSAGGIO:
-STELI per versione bollard
-BASE per installazione a parete e al suolo
-PICCHETTO per istallazione nel terreno

ESTER



Dimensions
Height: 165/500/800 mm
Width: 126 mm
Depth: 126 mm

Moulded colours:
Black *White* *Grey*

Diffuser PMMA:
Clear

GX53 LED



				*ADD. SUFFIX
GX53 LED	3 W	350 Lm	4000 K	.G1L
			3000 K	.G1R
GX53 LED	7 W	800 Lm	4000 K	.C1L
			3000 K	.C1R
	10 W	1200 Lm	4000 K	.D1L
			3000 K	.D1R

Bollard supplied with TÜV approved, long-life and efficient **GX53 LED lamp included**. Different wattages available.

- **COST SAVING:** long-life and efficient LED light sources
- **BUILT-IN DRIVER:** quick and easy lamp replacement
- **GREAT FLEXIBILITY:** GX53 standard lamp holder
- **FUTURE-PROOFED LUMINARIES:** easy to upgrade
- **SUITABLE FOR OUTDOOR USE:** driver fully protected against heat and humidity by silicone paste.

LED LAMPS

More technical details about TÜV approved Fumagalli LED Lamps on page 512.

** ADD THESE SUFFIXES TO THE REFERENCES MENTIONED IN THE CATALOGUE*

PHOTOMETRIC DATA SAMPLE

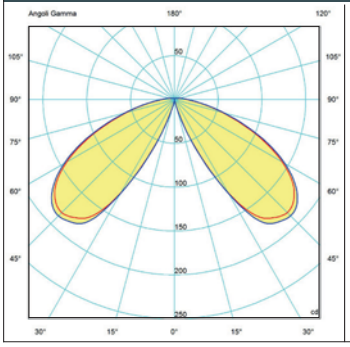

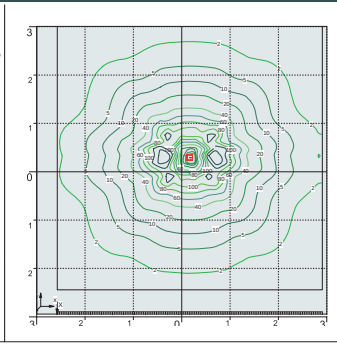

ESTER 800 *clear GX53 10W.*

Bollard height 0,8 mt
Area: 6x6 mt - average 15 lux

The photometric data for all the versions are available upon request or on our website.



3W 350 Lm = **40W** incandescent

SAVE 93%



7W 10W = **75W 100W** incandescent

SAVE 90%

ESTER

MODERN BOLLARD


DS1.564.D1L


DS1.560.D1L


DS1.561.D1L


DS1.563.D1L

MADE IN ITALY

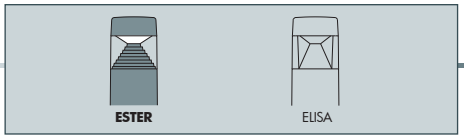

ESTER

CLASSIC BOLLARD

ESTER 800

DS1.564.G1L	**3W**	DS1.564.G1R
DS1.564.C1L	**7W**	DS1.564.C1R
DS1.564.D1L	**10W**	DS1.564.D1R

4000K GX53 LED LAMP INCLUDED *3000K*

Pcs 6
Kg 16
mc 0,145

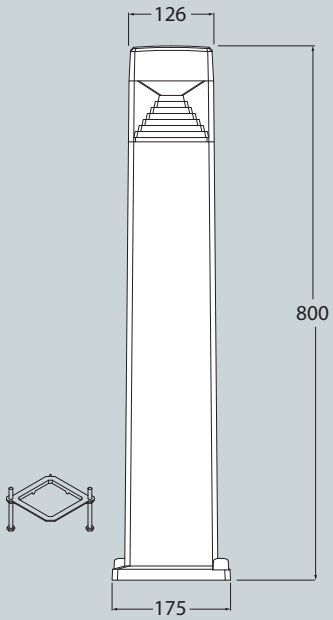

ESTER 500

DS1.563.G1L	**3W**	DS1.563.G1R
DS1.563.C1L	**7W**	DS1.563.C1R
DS1.563.D1L	**10W**	DS1.563.D1R

4000K GX53 LED LAMP INCLUDED *3000K*

Pcs 12
Kg 24
mc 0,145

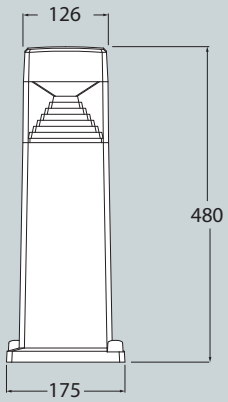

ESTER WALL

DS1.560.G1L	**3W**	DS1.560.G1R
DS1.560.C1L	**7W**	DS1.560.C1R
DS1.560.D1L	**10W**	DS1.560.D1R

4000K GX53 LED LAMP INCLUDED *3000K*

Pcs 18
Kg 22
mc 0,092

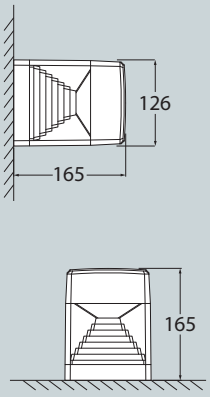

ESTER SPIKE

DS1.561.G1L	**3W**	DS1.561.G1R
DS1.561.C1L	**7W**	DS1.561.C1R
DS1.561.D1L	**10W**	DS1.561.D1R

4000K GX53 LED LAMP INCLUDED *3000K*

Pcs 18
Kg 23
mc 0,092

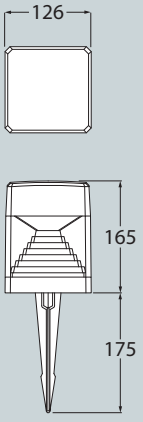

ELISA

MODERN BOLLARD

Architectural LED lamp range in modern style, made of shockproof resin material, UV-rays stabilized, rust and corrosion-free. Square bollards in different sizes, spike and wall mounted versions available. Supplied with white square reflector and with TÜV approved, long-life and efficient **GX53 LED lamps included**. Insulation class II, Protection rating IP55.

*Collezione di lampade architetturali a LED in stile moderno, realizzata in resina antiurto, stabilizzata ai raggi UV, inattaccabile da ruggine e corrosione. Ampia gamma di versioni disponibili per istallazioni su stelo bollard in diverse altezze, con picchetto o a parete. Provvista di riflettore quadro in colore bianco e fornita con **incluse lampadine a LED GX53** approvate TÜV di lunga durata ed elevata efficienza. Classe di isolamento II, grado di protezione IP55.*

DS2.564.D1L

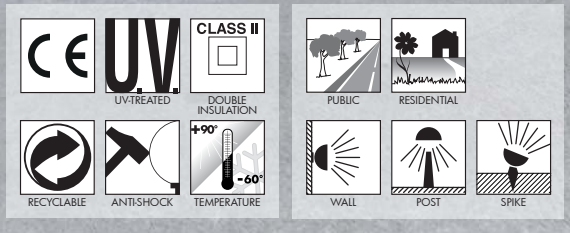

MADE IN ITALY

ELISA COMPONENTS

IP55



CAP fixed to the diffuser with no visible screws made of shockproof resin material, UV-rays stabilized, rust and corrosion-free.

CALOTTA *fissata al diffusore senza viti a vista, realizzata in resina antiurto, stabilizzata ai raggi UV, inattaccabile da ruggine e corrosione.*

DIFFUSER in clear colour made of UV-rays stabilized polymethylmethacrilate (PMMA).

DIFFUSORE *trasparente realizzato in polimetilmetacrilato (PMMA) resistente all'ingiallimento ed ai raggi UV.*

REFLECTOR with square shape spreading the lighting output to create a four beams luminous effect. Made of shockproof white reflective resin material.

RIFLETTORE *quadro che diffonde la luce dividendola in quattro fasci. Realizzato in resina antiurto di colore bianco.*



INSTALLATION ELEMENTS:
-POLES for bollard versions
-BASE for wall and surface installation
-SPIKE for in ground installation

ELEMENTI DI FISSAGGIO:
-STELI per versione bollard
-BASE per installazione a parete e al suolo
-PICCHETTO per istallazione nel terreno

ELISA



Dimensions
Height: 165/500/800 mm
Width: 126 mm
Depth: 126 mm

Moulded colours:
Black *White*
Grey

Diffuser PMMA:
Clear

GX53 LED



				*ADD. SUFFIX
GX53 LED	3 W	350 Lm	4000 K	.G1L
			3000 K	.G1R
GX53 LED	7 W	800 Lm	4000 K	.C1L
			3000 K	.C1R
	10 W	1200 Lm	4000 K	.D1L
			3000 K	.D1R

Bollard supplied with TÜV approved, long-life and efficient **GX53 LED lamp included**. Different wattages available.

- **COST SAVING:** long-life and efficient LED light sources
- **BUILT-IN DRIVER:** quick and easy lamp replacement
- **GREAT FLEXIBILITY:** GX53 standard lamp holder
- **FUTURE-PROOFED LUMINARIES:** easy to upgrade
- **SUITABLE FOR OUTDOOR USE:** driver fully protected against heat and humidity by silicone paste.

LED LAMPS

More technical details about TÜV approved Fumagalli LED Lamps on page 512.

** ADD THESE SUFFIXES TO THE REFERENCES MENTIONED IN THE CATALOGUE*

PHOTOMETRIC DATA SAMPLE

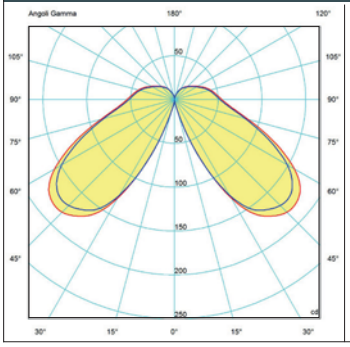

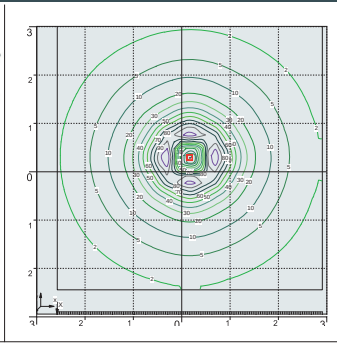

ELISA 800 *clear GX53 10W.*

Bollard height 0,8 mt
Area: 6x6 mt - average 13 lux

The photometric data for all the versions are available upon request or on our website.

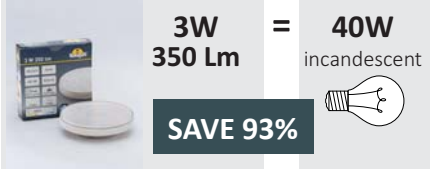



ELISA

MODERN BOLLARD


DS2.564.D1L


DS2.560.D1L


DS2.561.D1L


DS2.563.D1L

MADE IN ITALY

ELISA 800

DS2.564.G1L	**3W**	DS2.564.G1R
DS2.564.C1L	**7W**	DS2.564.C1R
DS2.564.D1L	**10W**	DS2.564.D1R
4000K	GX53 LED LAMP INCLUDED	*3000K*

Pcs 6
Kg 16
mc 0,145

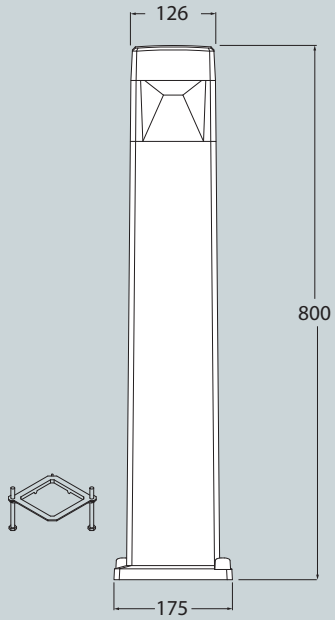

ELISA 500

DS2.563.G1L	**3W**	DS2.563.G1R
DS2.563.C1L	**7W**	DS2.563.C1R
DS2.563.D1L	**10W**	DS2.563.D1R
4000K	GX53 LED LAMP INCLUDED	*3000K*

Pcs 12
Kg 24
mc 0,145

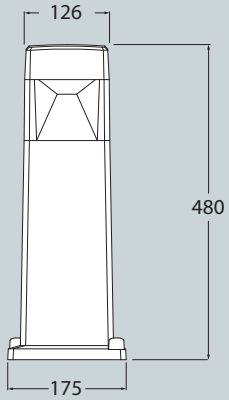

ELISA WALL

DS2.560.G1L	**3W**	DS2.560.G1R
DS2.560.C1L	**7W**	DS2.560.C1R
DS2.560.D1L	**10W**	DS2.560.D1R
4000K	GX53 LED LAMP INCLUDED	*3000K*

Pcs 18
Kg 22
mc 0,092

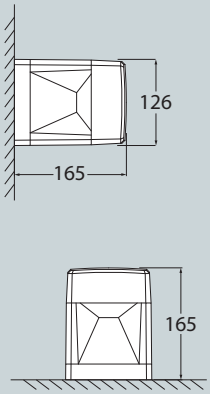

ELISA SPIKE

DS2.561.G1L	**3W**	DS2.561.G1R
DS2.561.C1L	**7W**	DS2.561.C1R
DS2.561.D1L	**10W**	DS2.561.D1R
4000K	GX53 LED LAMP INCLUDED	*3000K*

Pcs 18
Kg 23
mc 0,092

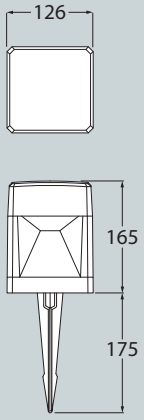

SAURO LED

CLASSIC BOLLARD

Bollard range in classic style made of shockproof resin material, UV-rays stabilized, rust and corrosion-free. Supplied with TÜV approved, long-life and efficient **GX53 LED lamp included** available in different wattages. Uniform light distribution for a safer and more enjoyable night atmosphere. Insulation class II, protection rating IP55.

*Gamma di bollard in stile classico, realizzata in resina antiurto, stabilizzata ai raggi UV, inattaccabile da ruggine e corrosione. Fornita con inclusa **lampadina a LED GX53** approvata TÜV, di lunga durata ed elevata efficienza, disponibile in diverse potenze. Uniforme distribuzione della luce per un'atmosfera notturna sicura e gradevole. Classe di isolamento II, grado di protezione IP55.*

D15.555.D1LCRB

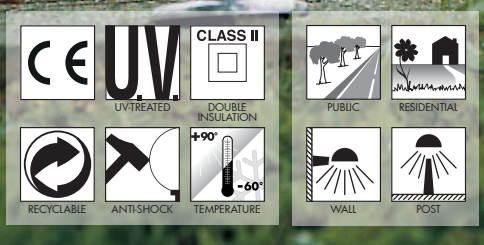

MADE IN ITALY

SAURO LED COMPONENTS

IP55



CAP made of shockproof resin material, locked to the diffuser and equipped with GX53 led lamp. To be removed for relamping by the supplied hexagonal key for locking screws.

CALOTTA *fissata al diffusore, realizzata in resina antiurto e completa di lampadina led GX53. Removibile tramite vite di sicurezza per permettere il cambio della lampadina.*

DISK made of UV-rays stabilized PMMA to spread the light and to get a lower dazzle.

DISCO *in polimetilmetacrilato (PMMA) per diffondere la luce e ridurre l'abbagliamento.*

DIFFUSER of UV stabilized polymethylmethacrylate (PMMA) available in clear or opal colour.

DIFFUSORE *in polimetilmetacrilato (PMMA) resistente all'ingiallimento ed ai raggi UV, disponibile in colore trasparente o opale.*

White **REFLECTOR** with conical shape made of shockproof resin material.

RIFLETTORE *bianco a forma conica, realizzato in resina antiurto.*

CONNECTION RING made of shockproof resin material, UV-rays stabilized, rust and corrosion-free.

GHIERA *di raccordo realizzata in resina antiurto, stabilizzata ai raggi UV, inattaccabile da ruggine e corrosione.*

SAURO LED



Dimensions
Diameter: Ø150 mm
Height: 500/800/1100 mm

Moulded colours:
Black, White, Grey

Painted colours:
Antique green, Antique bronze

Diffuser PMMA:
Clear, Opal

GX53 LED



			*ADD. SUFFIX
GX53 LED	7 W	800 Lm	4000 K .C1L
			3000 K .C1R
	10 W	1200 Lm	4000 K .D1L
			3000 K .D1R

Bollard supplied as standard with TÜV approved, long-life and efficient **GX53 LED lamp included.** Different wattages available. Quick and easy lamp replacement for a very simple maintenance after installation.

- **COST SAVING:** long-life and efficient LED light sources
- **BUILT-IN DRIVER:** quick and easy lamp replacement
- **GREAT FLEXIBILITY:** GX53 standard lamp holder
- **FUTURE-PROOFED LUMINARIES:** performances easy to upgrade to latest technology developments
- **SUITABLE FOR OUTDOOR USE:** driver fully protected against heat and humidity by silicone paste.

LED LAMPS

More technical details about TÜV approved Fumagalli LED Lamps on page 512.

** ADD THESE SUFFIXES TO THE REFERENCES MENTIONED IN THE CATALOGUE*

PHOTOMETRIC DATA SAMPLE

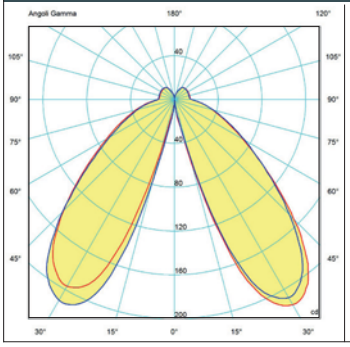

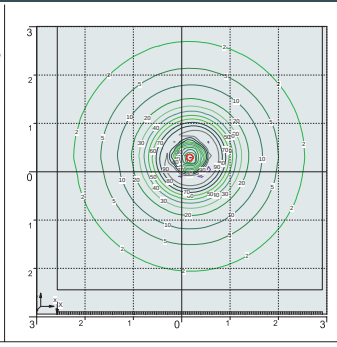

SAURO 1100 *clear GX53 10W.*

Sauro height 1,1 mt
Area: 6x6 mt - average 11 lux

The photometric data for all the versions are available upon request or on our website.



7W 800 Lm = **75W** incandescent

SAVE 90%



10W 1200 Lm = **100W** incandescent

SAVE 90%

SAURO LED

CLASSIC BOLLARD







MADE IN ITALY

SAURO 1100 LED

D15.555.C1LCRB	**7W**	D15.555.C1RCRB
D15.555.D1LCRB	**10W**	D15.555.D1RCRB

4000K GX53 LED LAMP INCLUDED *3000K*

Pcs 1
Kg 4,2
mc 0,068

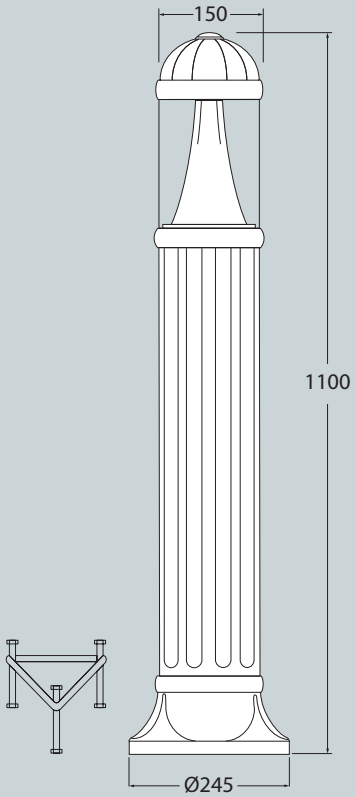

SAURO 800 LED

D15.554.C1LCRB	**7W**	D15.554.C1RCRB
D15.554.D1LCRB	**10W**	D15.554.D1RCRB

4000K GX53 LED LAMP INCLUDED *3000K*

Pcs 1
Kg 3,4
mc 0,05

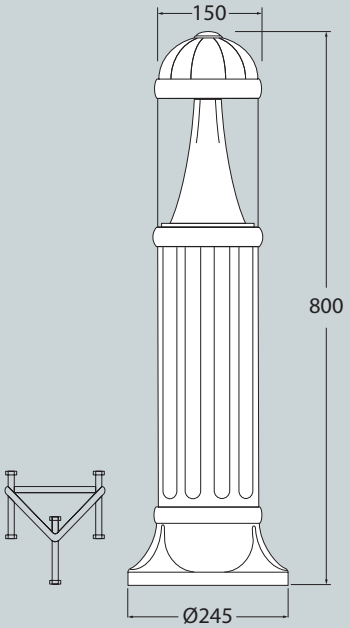

MIRELLA LED

D15.505.C1LCRB	**7W**	D15.505.C1RCRB
D15.505.D1LCRB	**10W**	D15.505.D1RCRB

4000K GX53 LED LAMP INCLUDED *3000K*

Pcs 1
Kg 2,7
mc 0,032

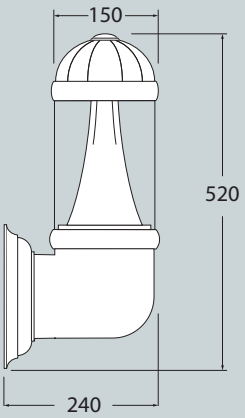

SAURO 500 LED

D15.553.C1LCRB	**7W**	D15.553.C1RCRB
D15.553.D1LCRB	**10W**	D15.553.D1RCRB

4000K GX53 LED LAMP INCLUDED *3000K*

Pcs 1
Kg 2
mc 0,032

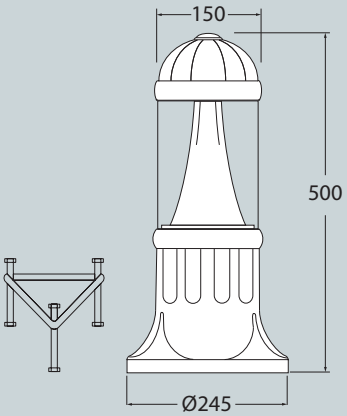

SAURO E27

CLASSIC BOLLARD

Bollard range in classic style made of shockproof resin material, UV-rays stabilized, rust and corrosion-free. Provided with E27 lampholder and prepared for louvre fixation. Insulation class II, protection rating IP55.

Gamma di bollard in stile classico, realizzata in resina antiurto, stabilizzata ai raggi UV, inattaccabile da ruggine e corrosione. Fornito con portalampada E27 e predisposto per il fissaggio del frangiluce. Classe di isolamento II, grado di protezione IP55.

D15.554.FC1

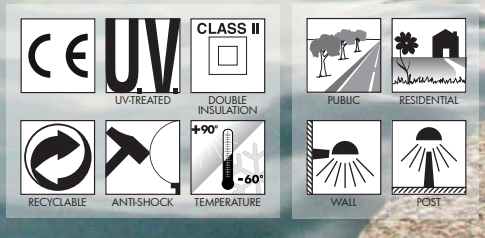

MADE IN ITALY

SAURO E27 COMPONENTS



CAP locked to the diffuser and made of shockproof resin material. To be removed for relamping by the supplied hexagonal key for locking screws.

CALOTTA *fissata al diffusore e realizzata in resina antiurto. Removibile tramite vite di sicurezza per permettere il cambio della lampadina.*

DIFFUSER made of UV-rays stabilized polymethylmethacrylate (PMMA), available in clear or opal colour.

DIFFUSORE *in polimetilmetacrilato (PMMA) resistente all'ingiallimento ed ai raggi UV, disponibile in colore trasparente o opale.*

LOUVRE (Optional) with a laminar symmetrical optic system, to direct the lighting output and to get a lower dazzle. Available in white resin material or in chrome aluminium. Recommended use with clear diffuser bollard.

FRANGILUCE (Optional) *con sistema ottico lamellare a ripartizione simmetrica, per orientare il fascio di luce e ridurre l'abbagliamento, disponibile nella versione in resina bianca o in alluminio cromato (utilizzo raccomandato con diffusore trasparente).*

CLOSED RING
White Resin
(H.FRA.D15)



CLOSED RING
Aluminium Chrome
(H.FC1)



CONNECTION RING provided with E27 lampholder seat in its upper side and equipped as an option with metal plate suitable for ballast fixation on its lower side.

GHIERA *di raccordo nella cui parte superiore si trova l'alloggiamento del portalampada E27e nella cui parte inferiore possono essere fissati gli ausiliari elettrici su apposita piastra metallica (opzionale).*

SAURO E27



Dimensions
Diameter: Ø150 mm
Height: 500/800/1100 mm

Moulded colours:
Black | White | Grey (except Nardo)

Painted colours:
Antique green | Antique bronze

Diffuser PMMA:
Clear | Opal

E27 VERSIONS



		lampholder only **E27** (CFL-LED-SON-HQI)	max 70W max 190mm		*ADD. SUFFIX
FILAMENT LED E27					.E27
	6 W	**800 Lm**	4000 K	.F1L
			2700 K	.F1R
	8 W	**1000 Lm**	4000 K	.M1L
			2700 K	.M1R
	12 W	**1500 Lm**	4000 K	.N1L
			2700 K	.N1R

** ADD THESE SUFFIXES TO THE REFERENCES MENTIONED IN THE CATALOGUE*

PHOTOMETRIC DATA SAMPLE

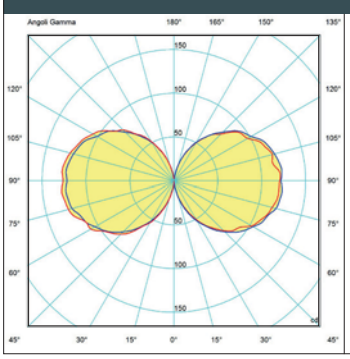

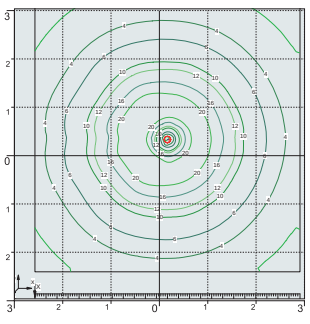

SAURO1100 *opal 12W Filament LED.*

Sauro height 1,1mt
Area: 6x6 mt - average 8 lux

The photometric data for all the versions are available upon request or on our website.

SAURO E27

CLASSIC BOLLARD







MADE IN ITALY

SAURO 1100

D15.555

Pcs 1
Kg 4
mc 0,068

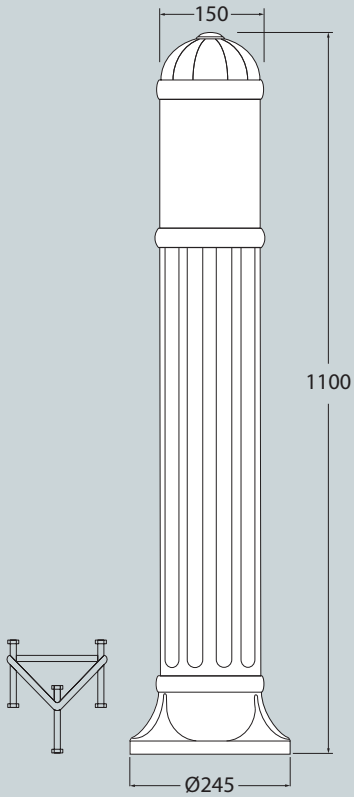

SAURO 800

D15.554

Pcs 1
Kg 3,2
mc 0,05

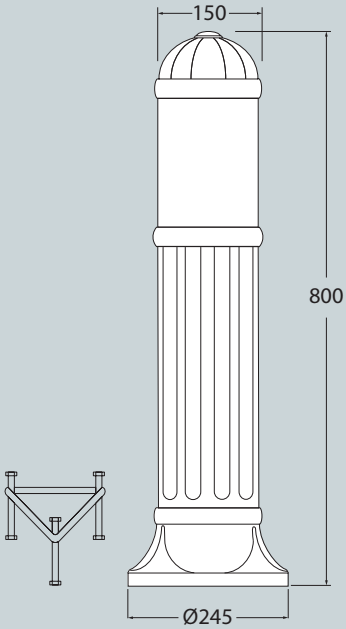

MIRELLA

D15.505

Pcs 1
Kg 2,5
mc 0,037

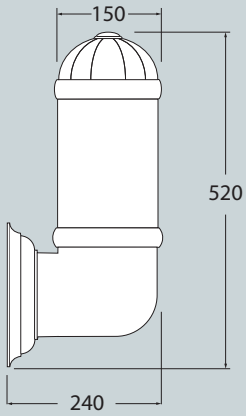

SAURO 500

D15.553

Pcs 1
Kg 1,8
mc 0,032

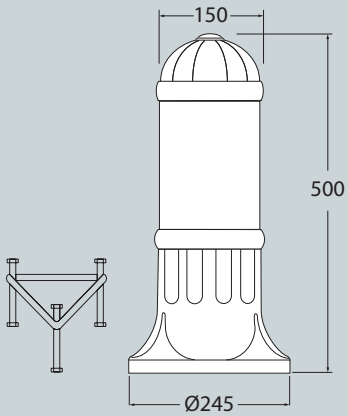

NARDO 900

000.515

Pcs 1
Kg 1,6
mc 0,054

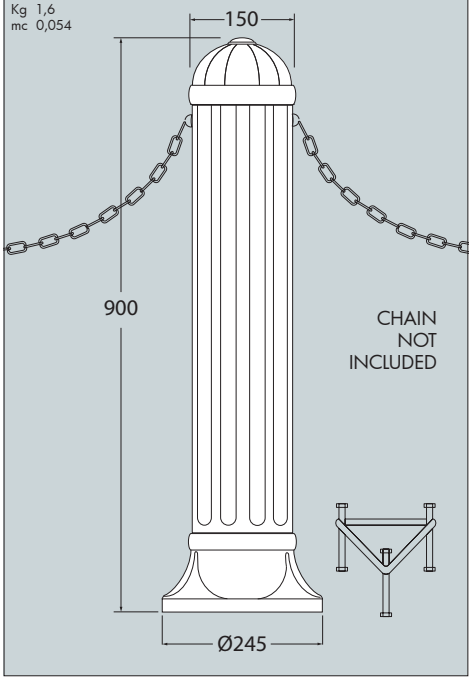

NARDO 600

000.514

Pcs 1
Kg 1,2
mc 0,040

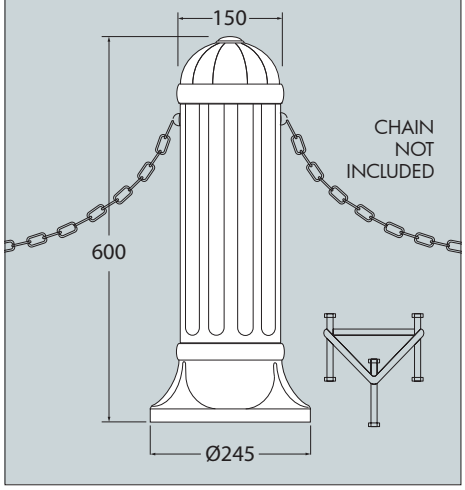

BOLLARD CHAIN (OPTIONAL)

H.BOL.CHN

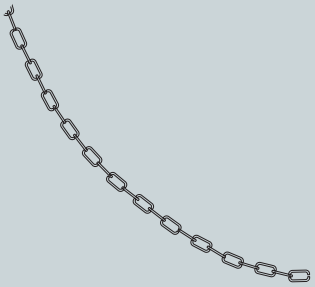

Optional resin chain for Bollard - Size 1000mm. Supplied with 2 open rings with closing system at the end.

Catena opzionale per bollard in resina - Misura 1000mm fornita con due anelli aperti con sistema di chiusura alle estremità.





UP&DOWN

FRANCA 90

UP & DOWN

LED lamp range in modern style made of shockproof resin material, UV-rays stabilized, rust and corrosion-free. Suitable for indoor and outdoor installations on wall and ceilings or on spike. Wall version available with single opening for one side light emission or with double opening for up&down light emission. Supplied as standard with TÜV approved, long-life and efficient **GU10 LED lamp included.** Insulation class II, protection rating IP55.

*Collezione di lampade a LED in stile moderno, realizzata in resina antiurto, stabilizzata ai raggi UV, inattaccabile da ruggine e corrosione. Idonea per istallazioni a parete, a soffitto o su picchetto. Disponibile con apertura singola ed emissione della luce in una sola direzione o con apertura doppia ed emissione della luce up&down. Fornita con **inclusa lampadina a LED GU10**, approvata TÜV di lunga durata ed elevata efficienza. Classe di isolamento II, grado di protezione IP55.*

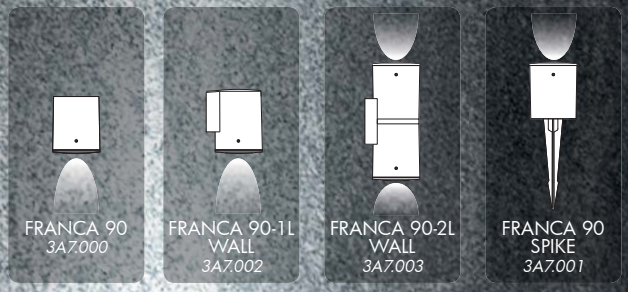

FRANCA 90
3A7.000

FRANCA 90-1L WALL
3A7.002

FRANCA 90-2L WALL
3A7.003

FRANCA 90 SPIKE
3A7.001

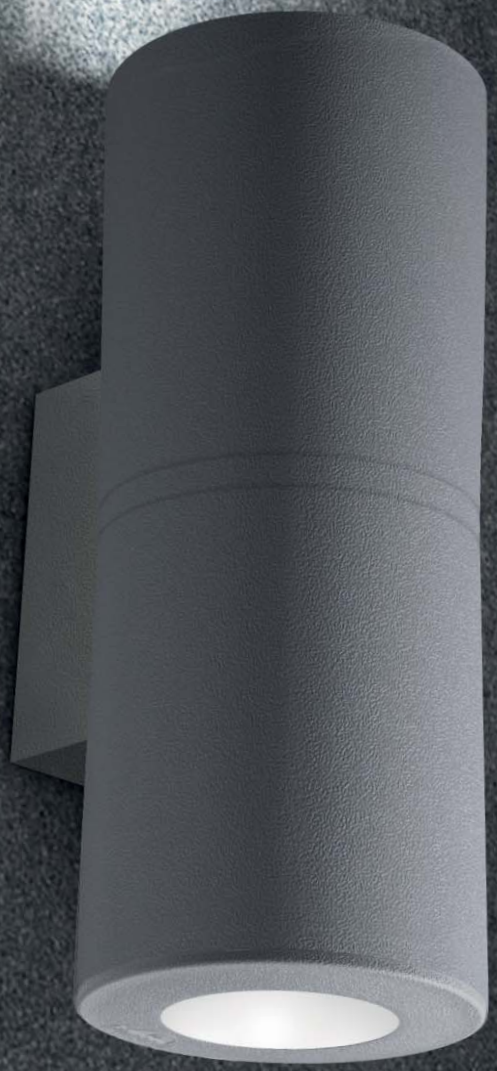

3A7.003.U2L

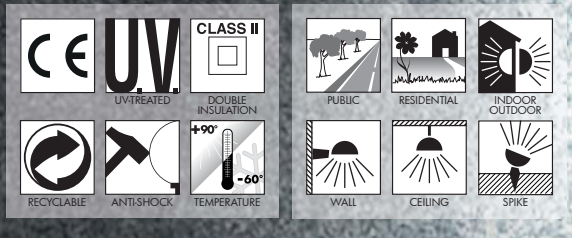

MADE IN ITALY

FRANCA 90 - COMPONENTS

IP55



COVER with no visible screws made of shockproof resin material.

COVER *senza viti a vista realizzata in resina antiurto.*

DIFFUSER made of shockproof resin material (PC) complete with silicone rubber gasket to ensure high protection against external agents. Frosted or coloured versions, to get a customized ambiance.

DIFFUSORE *in resina antiurto (PC) completo di guarnizione in gomma siliconica per garantire un alto livello di protezione contro gli agenti esterni. Disponibile nella versione satinata o colorata, per ottenere un'ambientazione personalizzata.*

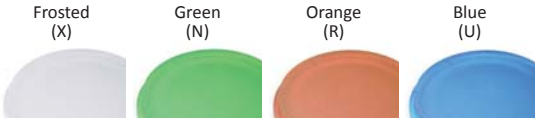

CONNECTION RINGmade of shockproof resin material, provided with GU10 lampholder.

GHIERA *di raccordo realizzata in resina antiurto fornita completa di portalampada GU10.*

BODY made of shockproof resin material, UV-rays stabilized, rust and corrosion-free.

CORPO *realizzato in resina antiurto, stabilizzata ai raggi UV, inattaccabile da ruggine e corrosione*

INSTALLATION ELEMENTS
-BRACKETS for single or double lights versions
-SPIKE for in ground installation

ELEMENTI DI FISSAGGIO:
-SUPPORTI per installazione a parete con luce singola o doppia
-PICCHETTO per l'istallazione nel terreno

FRANCA 90



Dimensions and weight
Diameter: Ø95 mm
Height: 115 mm
Weight: 0,4 Kg

Moulded colours:
Black *White* *Grey*

Diffuser PC:
Frosted *Green* *Orange* *Blue*

GU10 LED



				*ADD. SUFFIX
GU10 LED	3,5 W	400 Lm	4000 K	.U1L
			3000 K	.U1R
	2x 3,5W 7 W	800 Lm	4000 K	.U2L
			3000 K	.U2R

Up&down bulkhead supplied as standard with single or double TÜV approved long-life and efficient **GU10 LED lamp included**. Quick and easy lamp replacement for a very simple maintenance after installation.

- **COST SAVING:** long-life and efficient LED light sources.
- **BUILT-IN DRIVER:** quick and easy lamp replacement.
- **GREAT FLEXIBILITY:** GU10 standard lamp holder.
- **FUTURE-PROOFED LUMINARIES:** performances easy to upgrade to latest technology developments.
- **SUITABLE FOR OUTDOOR USE:** built-in driver fully protected against heat and humidity by silicone paste.

3,5W 400 Lm = **50W** halogen

SAVE 92%

LED LAMPS

More technical details about TÜV approved Fumagalli LED Lamps on page 512.

** ADD THESE SUFFIXES TO THE REFERENCES MENTIONED IN THE CATALOGUE*

FRANCA 90

UP & DOWN


3A7.002.U1L


3A7.003.U2L

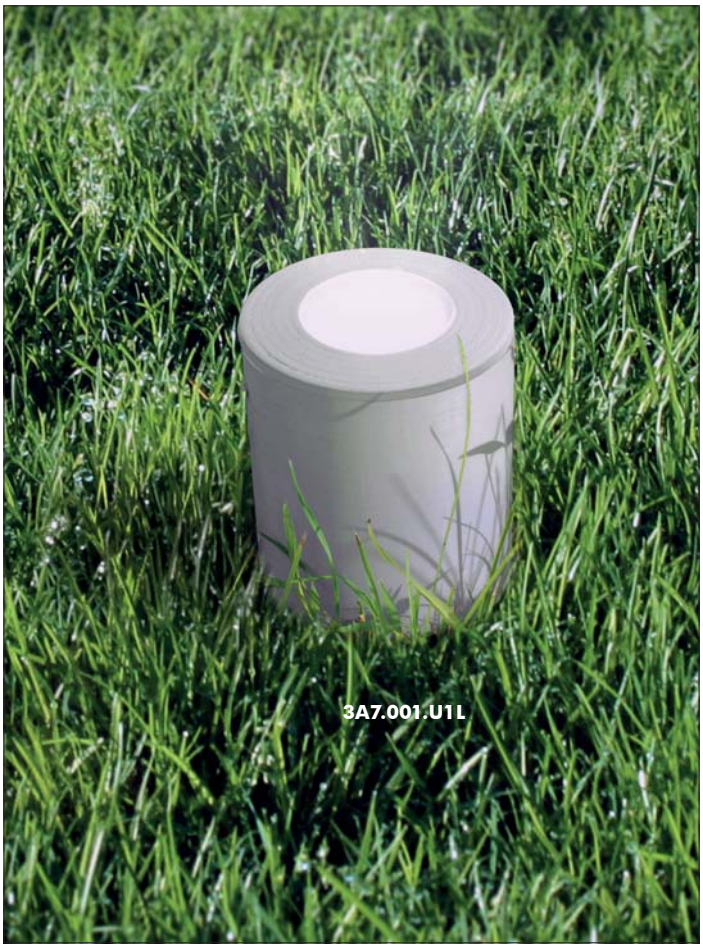
3A7.001.U1L


3A7.000.U1L

MADE IN ITALY

FRANCA 90

3A7.000.U1L	**3,5W**	3A7.000.U1R
4000K	GU10 LED LAMP INCLUDED	*3000K*

Pcs 30
Kg 12,6
mc 0,09

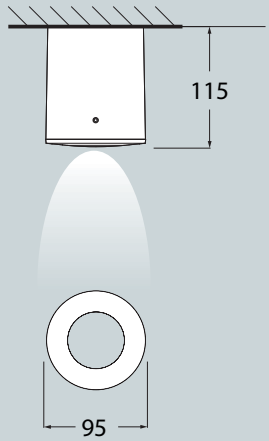

FRANCA 90 SPIKE

3A7.001.U1L	**3,5W**	3A7.001.U1R
4000K	GU10 LED LAMP INCLUDED	*3000K*

Pcs 30
Kg 13,6
mc 0,09

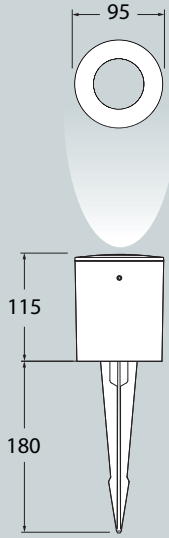

FRANCA 90-1L WALL

3A7.002.U1L	**3,5W**	3A7.002.U1R
4000K	GU10 LED LAMP INCLUDED	*3000K*

Pcs 30
Kg 13,6
mc 0,09

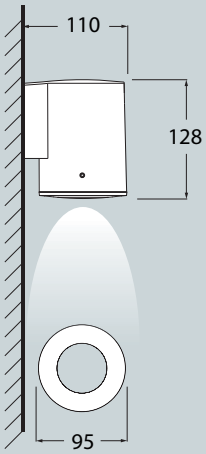

FRANCA 90-2L WALL

3A7.003.U2L	**2 x 3,5W**	3A7.003.U2R
4000K	2 GU10 LED LAMPS INCLUDED	*3000K*

Pcs 20
Kg 22
mc 0,12

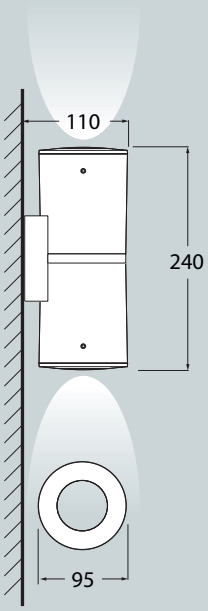

MARTA 90

UP & DOWN

Up&down bulkhead lamp made of shockproof resin material, UV-rays stabilized, rust and corrosion-free. Available with single opening for one side light emission or with double opening for up&down light emission. Supplied as standard with TÜV approved, long-life and efficient **GU10 LED lamps.** Insulation class II, Protection rating IP55.

*Plafoniera up&down realizzata in resina antiurto, stabilizzata ai raggi UV, inattaccabile da ruggine e corrosione. Disponibile con apertura singola ed emissione della luce in una sola direzione o con apertura doppia ed emissione della luce up&down. Fornito nella versione standard con **inclusa lampadina a LED GU10** approvata TÜV di lunga durata ed elevata efficienza. Classe di isolamento II, grado di protezione IP55.*

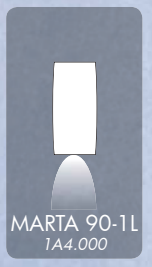

MARTA 90-1L
1A4.000

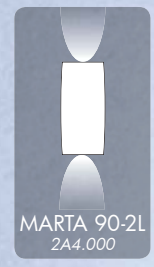

MARTA 90-2L
2A4.000



2A4.000.U2L

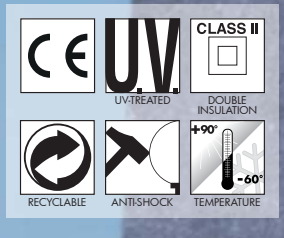

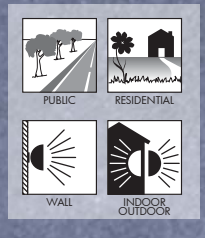

MARTA 90 - COMPONENTS

IP55



BODY made of shockproof resin material, UV-rays stabilized, rust and corrosion free. Available with double openings for up&down light emission or with single opening for one side light emission.

***CORPO** in resina antiurto, stabilizzata ai raggi UV, inattaccabile da ruggine e corrosione. Disponibile con apertura doppia ed emissione della luce UP&DOWN o con apertura singola ed emissione della luce in una sola direzione.*

DIFFUSER made of shockproof resin material (PC) complete with silicone rubber gasket to ensure high protection against external agents. Frosted or coloured versions, to get a customized ambiance.

***DIFFUSORE** in resina antiurto (PC) completo di guarnizione in gomma siliconica per garantire un alto livello di protezione contro gli agenti esterni. Disponibile nella versione satinata o colorata, per ottenere un'ambientazione personalizzata.*

Frosted (X) | Green (N) | Orange (R) | Blue (U)



BASE made of shockproof resin material suitable for the electrical devices fixation and provided with single or double GU10 lampholder.

***BASE** in resina antiurto predisposta per il fissaggio degli accessori elettrici. Fornita completa di portalampade GU10 singolo o doppio.*

MARTA 90



Dimensions and weight
Width: 92 mm
Height: 170 mm
Depth: 80 mm
Weight: 0,5 Kg

Moulded colours:
Black *White* *Grey*

Diffuser PC:
Frosted *Green* *Orange* *Blue*

GU10 LED



Up&down bulkhead supplied as standard with single or double TÜV approved long-life and efficient **GU10 LED lamps included**. Quick and easy lamp replacement for a very simple maintenance after installation.

- **COST SAVING:** long-life and efficient LED light sources.
- **BUILT-IN DRIVER:** quick and easy lamp replacement.
- **GREAT FLEXIBILITY:** GU10 standard lamp holder.
- **FUTURE-PROOFED LUMINARIES:** performances easy to upgrade to latest technology developments.
- **SUITABLE FOR OUTDOOR USE:** built-in driver fully protected against heat and humidity by silicone paste.

				*ADD. SUFFIX
GU10 LED	3,5 W	400 Lm	4000 K	.U1L
			3000 K	.U1R
	2x 3,5W **7 W**	800 Lm	4000 K	.U2L
			3000 K	.U2R

3,5W 400 Lm = **50W** halogen

SAVE 92%

LED LAMPS

More technical details about TÜV approved Fumagalli LED Lamps on page 512.

** ADD THESE SUFFIXES TO THE REFERENCES MENTIONED IN THE CATALOGUE*

MARTA 90

UP & DOWN

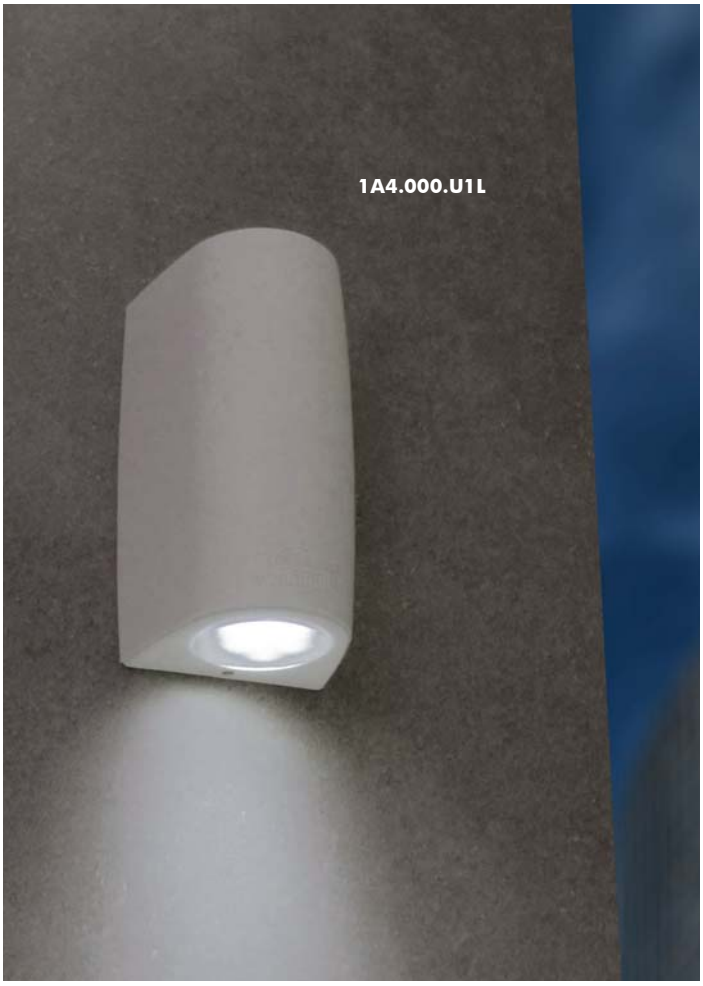





MADE IN ITALY

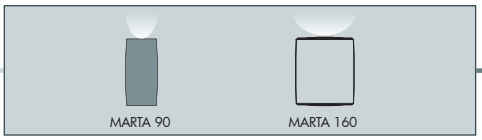

MARTA 90

UP & DOWN

MARTA 90-1L

1A4.000.U1L	**3,5W**	1A4.000.U1R
4000K	GU10 LED LAMP INCLUDED	*3000K*

Pcs 36
Kg 17,3
mc 0,12

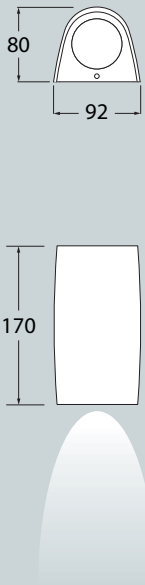

MARTA 90-2L

2A4.000.U2L	**2x3,5W**	2A4.000.U2R
4000K	2 GU10 LED LAMPS INCLUDED	*3000K*

Pcs 36
Kg 21,9
mc 0,12

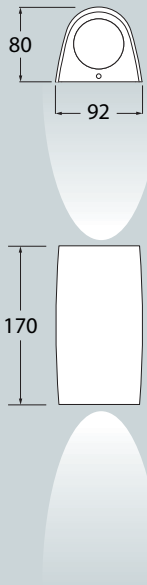

MARTA 160

UP & DOWN

Up&down bulkhead lamp made of shockproof resin material, UV-rays stabilized, rust and corrosion-free. Available with single opening for one side light emission or with double opening for up&down light emission. Supplied as standard with TÜV approved, long-life and efficient **GX53 LED lamps included**. Single opening version available also with E27 lampholder. Insulation class II, Protection rating IP55.

Plafoniera up&down realizzata in resina antiurto, stabilizzata ai raggi UV, inattaccabile da ruggine e corrosione. Disponibile con apertura singola ed emissione della luce in una sola direzione o con apertura doppia ed emissione della luce up&down. Fornita con incluse lampadine a LED GX53 approvate TÜV di lunga durata ed elevata efficienza o provvista di portalampada E27. Classe di isolamento II, grado di protezione IP55.



MARTA 160-1L
1A6.000



MARTA 160-2L
2A6.000



2A6.000.WUD2L

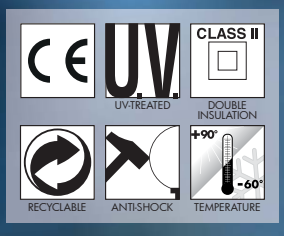





MARTA 160

UP & DOWN

MARTA 160 - COMPONENTS

IP55



BODY made of shockproof resin material, UV-rays stabilized, rust and corrosion free. Available with double openings for up&down light emission or with single opening for one side light emission.

CORPO *in resina antiurto, stabilizzata ai raggi UV, inattaccabile da ruggine e corrosione. Disponibile con apertura doppia ed emissione della luce up&down o con apertura singola ed emissione della luce in una sola direzione.*

DIFFUSER made of shockproof resin material (PC) complete with silicone rubber gasket to ensure high protection against external agents. Frosted or coloured versions, to get a customized ambiance.

DIFFUSORE *in resina antiurto (PC) completo di guarnizione in gomma siliconica per garantire un alto livello di protezione contro gli agenti esterni. Disponibile nella versione satinata o colorata, per ottenere un'ambientazione personalizzata.*

Frosted (X) | Green (N) | Orange (R) | Blue (U)



BASE made of shockproof resin material suitable for the electrical devices fixation and provided with single or double GX53 lampholder. For single opening version, the base can be supplied also with E27 lampholder.

BASE *in resina antiurto predisposta per il fissaggio degli accessori elettrici. Fornita completa di portalampada GX53 singolo o doppio. Nella versione con apertura singola la base può essere fornita anche con portalampada E27.*

MARTA 160

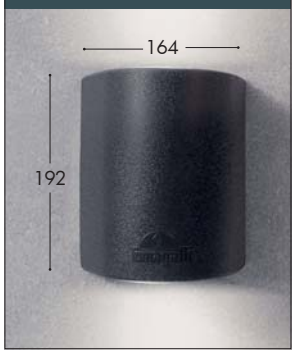

Dimensions and weight
Width: 164 mm
Height: 192 mm
Depth: 145 mm
Weight: 1,1 Kg

Moulded colours:
Black *White* *Grey*

Diffuser PC:
Frosted *Green* *Orange* *Blue*

GX53 LED



					*ADD. SUFFIX
MARTA 160-1L	GX53 LED	3 W	350 Lm	4000 K	.G1L
				3000 K	.G1R
	GX53 LED	7 W	800 Lm	4000 K	.C1L
				3000 K	.C1R
		10 W	1200 Lm	4000 K	.D1L
				3000 K	.D1R
MARTA 160-2L	GX53 LED	2x3 W 6 W	700 Lm	4000 K	.G2L
				3000 K	.G2R
	GX53 LED	2x7 W 14 W	1600 Lm	4000 K	.C2L
				3000 K	.C2R
		2x10 W 20 W	2400 Lm	4000 K	.D2L
				3000 K	.D2R

Up&Down bulkhead supplied as standard with TÜV approved, long-life and efficient **GX53 LED lamp included**. Different wattages available. Quick and easy lamp replacement for a very simple maintenance after installation.

- **COST SAVING:** long-life and efficient LED light sources
- **BUILT-IN DRIVER:** quick and easy lamp replacement
- **GREAT FLEXIBILITY:** GX53 standard lamp holder
- **FUTURE-PROOFED LUMINARIES:** performances easy to upgrade to latest technology developments
- **SUITABLE FOR OUTDOOR USE:** built-in driver fully protected against heat and humidity by silicone paste.

LED LAMPS

More technical details about TÜV approved Fumagalli LED Lamps on page 512.

** ADD THESE SUFFIXES TO THE REFERENCES MENTIONED IN THE CATALOGUE*

E27



MARTA 160-1L E27	**E27** (CFL -LED)	max 110 mm	.E27

The E27 version is avaiable only with single opening for one side light emission.

MARTA 160

UP & DOWN

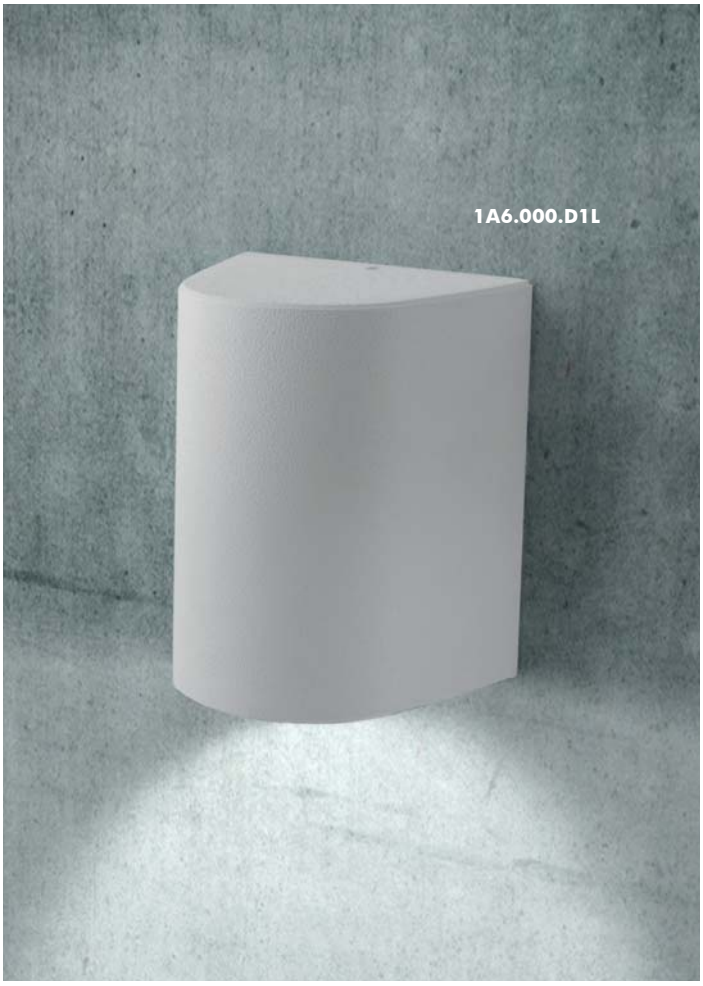





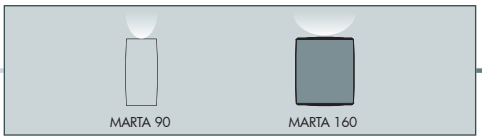

MARTA 160

UP & DOWN

MARTA 160-1L GX53		
1A6.000.G1L	**3W**	1A6.000.G1R
1A6.000.C1L	**7W**	1A6.000.C1R
1A6.000.D1L	**10W**	1A6.000.D1R
4000K	GX53 LED LAMP INCLUDED	*3000K*

Pcs 18
Kg 26
mc 0,12

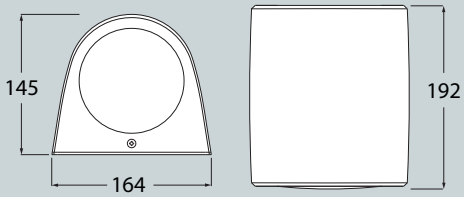

MARTA 160-2L GX53		
2A6.000.G2L	**2x3W**	2A6.000.G2R
2A6.000.C2L	**2x7W**	2A6.000.C2R
2A6.000.D2L	**2x10W**	2A6.000.D2R
4000K	2 GX53 LED LAMPS INCLUDED	*3000K*

Pcs 18
Kg 28
mc 0,12

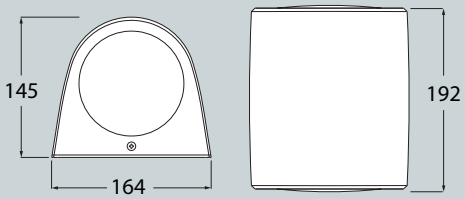

MARTA 160-1L E27	
E27 lampholder	1A6.000.E27

Pcs 18
Kg 20
mc 0,12

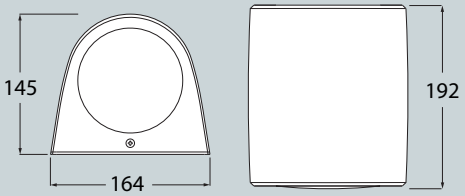

FRANCY

UP & DOWN

Bulkhead lamp with no visible screws and UP&DOWN light emission. Made of shockproof resin material, UV-rays stabilized, rust and corrosion-free. Supplied with TÜV approved, long-life and efficient **LED filament lamps** suitable for outdoor use **included**. Version with motion sensor available. Insulation class II, Protection rating IP66.

*Plafoniera senza viti a vista con emissione della luce UP&DOWN. Realizzata in resina antiurto, stabilizzata ai raggi UV, inattaccabile da ruggine e corrosione. Fornita con **incluse lampadine LED a filamento** adatte ad uso in ambiente esterno, approvate TÜV, di lunga durata ed elevata efficienza. Disponibile anche con sensore di movimento.Classe di isolamento II, grado di protezione IP66.*





1A1.000.F1L

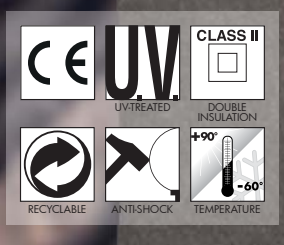

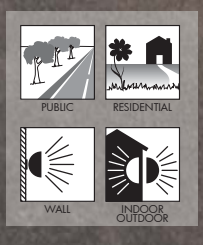

MADE IN ITALY

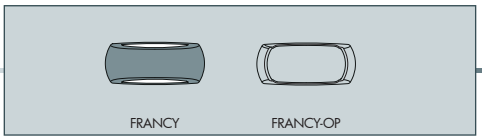

FRANCY - COMPONENTS

IP66



COVER with no visible screws made of shockproof resin material UV-rays stabilized. Designed for getting UP&DOWN or side light emission.

COVER *senza viti a vista realizzata in resina antiurto, stabilizzata ai raggi UV. Disegnata per ottenere un'emissione laterale della luce.*



DIFFUSER made of UV-rays stabilized polymethylmethacrylate (PMMA) screwed to the bulkhead base.

DIFFUSORE *realizzato in polimetilmetacrilato (PMMA) stabilizzato ai raggi UV da avvitare alla base della plafoniera.*



BASE made of shockproof resin material, UV-rays stabilized, suitable for the electrical devices fixation. Provided with E27 lampholder and with silicone rubber gasket to ensure high protection against external agents.

BASE realizzata in resina antiurto, stabilizzata ai raggi UV, adatta ad alloggiare gli accessori elettrici. Fornita completa di portalampada E27 e di guarnizione in gomma siliconica per garantire un alto livello di protezione contro gli agenti esterni.

FRANCY

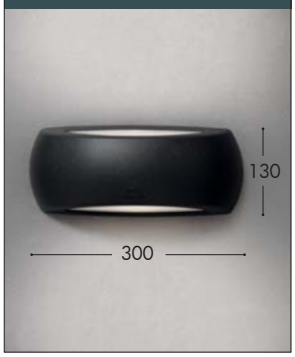

Dimensions and weight
Width: 130 mm
Height: 300 mm
Depth: 90 mm
Weight: 0,7 Kg

Moulded Colours:
Black *Grey* *White*

Diffuser PMMA:
Opal

E27



Bulkhead supplied **fully pre-wired** with **E27** lampholder. Provided with TÜV approved, long-life and efficient **LED filament lamps** suitable for outdoor use with driver fully protected against heat and humidity by silicone paste.

				*ADD. SUFFIX
FILAMENT LED E27	6 W	800 Lm	4000 K	.F1L
			2700 K	.F1R
	8 W	1000 Lm	4000 K	.M1L
			2700 K	.M1R
	12 W	1500 Lm	4000 K	.N1L
			2700 K	.N1R



6W
8W
12W
=
60W
75W
100W
incandescent

SAVE 90%

E27 with sensor



Bulkhead supplied **fully pre-wired** with **E27** lampholder and **LED filament lamps** as an option. Complete with microwave daylight and motion **sensor**. Sensor operating voltage: 220-240V. (120V version available on demand).

				*ADD. SUFFIX
FILAMENT LED E27	6 W	800 Lm	4000 K	.S1L
			2700 K	.S1R
	8 W	1000 Lm	4000 K	.T1L
			2700 K	.T1R
	12 W	1500 Lm	4000 K	.V1L
			2700 K	.V1R



6W
8W
12W
=
60W
75W
100W
incandescent

SAVE 90%

LED LAMPS

More technical details about TÜV approved Fumagalli LED Lamps on page 512.

** ADD THESE SUFFIXES TO THE REFERENCES MENTIONED IN THE CATALOGUE*

FRANCY

UP&DOWN



1A1.000.F1R



1A1.000.F1L

MADE IN ITALY

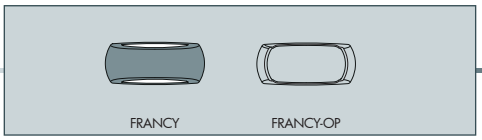

FRANCY

UP&DOWN

FRANCY		
1A1.000.F1L	**6W**	1A1.000.F1R
1A1.000.M1L	**8W**	1A1.000.M1R
1A1.000.N1L	**12W**	1A1.000.N1R
4000K	E27 FILAMENT LED LAMP INCLUDED	*2700K*

Pcs 24
Kg 18,2
mc 0,12

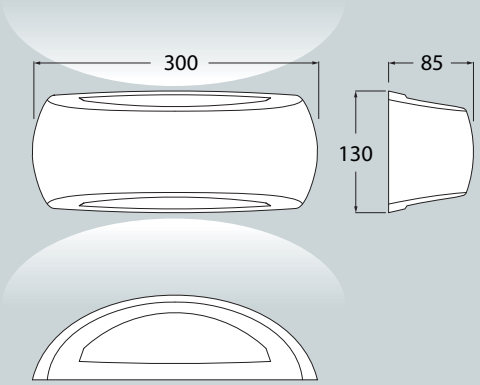





BULKHEAD

FRANCY-OP

RECTANGULAR

Bulkhead lamp with no visible screws and front light emission. Made of shockproof resin material, UV-rays stabilized, rust and corrosion-free. Suitable for wall and ceiling installation. Complete with TÜV approved, long-life and efficient **GX53 LED lamps included** or provided with **E27** lampholder. Version with motion sensor available. Insulation class II, Protection rating IP66.

*Plafoniera senza viti a vista con emissione della luce frontale. Realizzata in resina antiurto stabilizzata ai raggi UV, inattaccabile da ruggine e corrosione. Idonea per il montaggio a parete e a soffitto. Completa di **lampadine a LED GX53** approvate TÜV di lunga durata ed elevata efficienza o fornita nella versione **E27**. Disponibile anche con sensore di movimento. Classe di isolamento II, grado di protezione IP66.*



FRANCY-OP
2A1.000



2A1.000

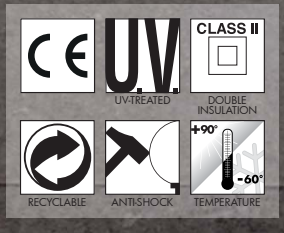

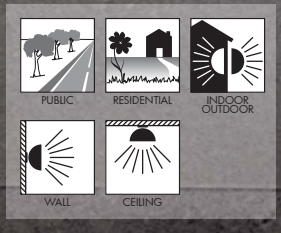

MADE IN ITALY

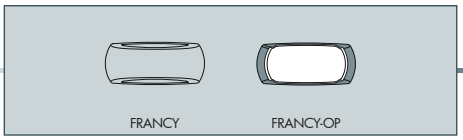

FRANCY-OP

RECTANGULAR

FRANCY-0P - COMPONENTS

IP66



COVER with no visible screws made of shockproof resin material UV-rays stabilized. Designed for getting front light emission.

***COVER** senza viti a vista realizzata in resina antiurto, stabilizzata ai raggi UV. Disegnata per ottenere un'emissione frontale della luce.*



DIFFUSER made of UV-rays stabilized polymethylmethacrylate (PMMA) screwed to the bulkhead base.

***DIFFUSORE** realizzato in polimetilmetacrilato (PMMA) stabilizzato ai raggi UV da avvitare alla base della plafoniera.*



BASE made of shockproof resin material, UV-rays stabilized, suitable for the electrical devices fixation. Provided with E27 or with 2x GX53 lampholders and complete with silicone rubber gasket to ensure high protection against external agents.

***BASE** realizzata in resina antiurto, stabilizzata ai raggi UV, adatta ad alloggiare gli accessori elettrici. Fornita completa di portalampada E27 o di 2 portalampada GX53. Completa di guarnizione in gomma siliconica per garantire un alto livello di protezione contro gli agenti esterni.*

FRANCY-OP

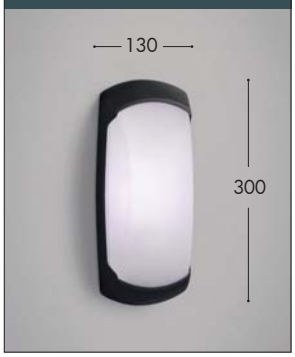

Dimensions and weight
Width: 130 mm
Height: 300 mm
Depth: 90 mm
Weight: 0,6 Kg

Moulded Colours:
Black *Grey* *White*

Diffuser PMMA:
Opal

LED LAMPS

More technical details about TÜV approved Fumagalli LED Lamps on page 512.

GX53 LED



Bulkhead supplied **fully pre-wired** complete with TÜV approved long-life and efficient **GX53 LED lamps 2x 3W-700lm included.** Quick and easy lamp replacement for a very simple maintenance after installation.

				*ADD. SUFFIX
GX53 LED	2x 3W **6 W**	**700 Lm**	4000 K	G2L
			3000 K	.G2R



2x 3W 700 Lm = **60W** incandescent

SAVE 90%

E27



Bulkhead supplied **fully pre-wired** with **E27** lampholder. Provided as an option with TÜV approved, long-life and efficient **LED filament lamps** suitable for outdoor use with driver fully protected against heat and humidity by silicone paste.

				*ADD. SUFFIX
E27 (CFL -LED)		max 160 mm		.E27
FILAMENT LED E27	**6 W**	**800 Lm**	4000 K	.F1L
			2700 K	.F1R
	8 W	**1000 Lm**	4000 K	.M1L
			2700 K	.M1R
	12 W	**1500 Lm**	4000 K	.N1L
			2700 K	.N1R



6W 8W 12W = **60W 75W 100W** incandescent

SAVE 90%

E27 with sensor



Bulkhead supplied **fully pre-wired** with **E27** lampholder and **LED filament lamps** as an option. Complete with microwave daylight and motion **sensor.** Sensor operating voltage: 220-240V. (120V version available on demand).

				*ADD. SUFFIX
E27 (CFL -LED)		max 160 mm		.ES7
FILAMENT LED E27	**6 W**	**800 Lm**	4000 K	.S1L
			2700 K	.S1R
	8 W	**1000 Lm**	4000 K	.T1L
			2700 K	.T1R
	12 W	**1500 Lm**	4000 K	.V1L
			2700 K	.V1R



6W 8W 12W = **60W 75W 100W** incandescent

SAVE 90%

** ADD THESE SUFFIXES TO THE REFERENCES MENTIONED IN THE CATALOGUE*

FRANCY-OP

RECTANGULAR



2A1.000



2A1.000

MADE IN ITALY

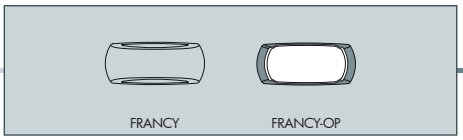

FRANCY-OP

RECTANGULAR

FRANCY-OP GX53

2A1.000.G2L	**2x3W**	2A1.000.G2R
4000K	2 GX53 LED LAMPS INCLUDED	*3000K*

Pcs 24
Kg 17,2
mc 0,12

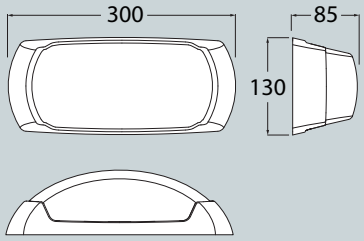

FRANCY-OP E27

2A1.000.F1L	**6W**	2A1.000.F1R
2A1.000.M1L	**8W**	2A1.000.M1R
2A1.000.N1L	**12W**	2A1.000.N1R
4000K		*2700K*

Pcs 24
Kg 15,7
mc 0,12

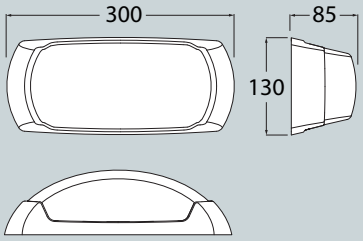

E27 lampholder	2A1.000.E27
E27 with sensor	2A1.000.ES7

BERTINA

SMALL ROUND

LED bulkhead lamp with round shape and **no visible screws.** Made of shockproof resin material, UV-rays stabilized, rust and corrosion-free. Suitable for wall and ceiling installation. Supplied with TÜV approved, long-life and efficient **GX53 LED lamps included**. Insulation class II, Protection rating IP66.

Plafoniera circolare a LED senza viti a vista. Realizzata in resina antiurto stabilizzata ai raggi UV, inattaccabile da ruggine e corrosione. Idonea per il montaggio a parete e a soffitto. Fornita con **incluse lampadine a *LED GX53*** *approvate TÜV, di lunga durata ed elevata efficienza, disponibil I in diverse potenze. Classe di isolamento II, grado di protezione IP66.*

BERTINA
1B1.000



1B1.000.D1L

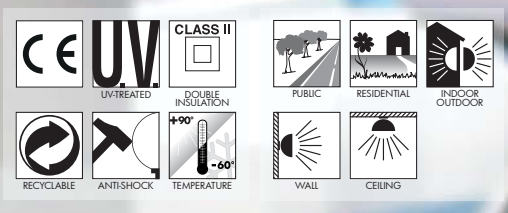

MADE IN ITALY

BERTINA - COMPONENTS

IP66



COVER with no visible screws made of shockproof resin material, UV-rays stabilized.

COVER senza viti a vista *realizzata in resina antiurto stabilizzata ai raggi UV.*



Opal **DIFFUSER** made of UV-rays stabilized polymethylmethacrylate (PMMA) screwed to the bulkhead base.

DIFFUSORE *opale realizzato in polimetilmetacrilato (PMMA) stabilizzato ai raggi UV da avvitare alla base della plafoniera.*

BASE made of shockproof resin material, UV-rays stabilized, suitable for the electrical devices fixation. Provided with GX53 lampholder and with silicone rubber gasket to ensure high protection against external agents.

BASE *realizzata in resina antiurto, stabilizzata ai raggi UV, adatta ad alloggiare gli accessori elettrici. Fornita completa di portalampade GX53 e di guarnizione in gomma siliconica per garantire un alto livello di protezione contro gli agenti esterni.*

BERTINA



Dimensions and weight
Diameter: ø 200 mm
Depth: 70 mm
Weight: 0,6 Kg

Moulded colours:
Black White Grey

Diffuser PMMA:
Opal

GX53 LED



				*ADD. SUFFIX
GX53 LED	3 W	350 Lm	4000 K	.G1L
			3000 K	.G1R
GX53 LED	7 W	800 Lm	4000 K	.C1L
			3000 K	.C1R
	10 W	1200 Lm	4000 K	.D1L
			3000 K	.D1R

Bulkhead supplied **fully pre-wired** complete with TÜV approved, long-life and efficient **GX53 LED lamp included**. Different wattages available. Quick and easy lamp replacement for a very simple maintenance after installation.

- **COST SAVING:** long-life and efficient LED light sources
- **BUILT-IN DRIVER:** quick and easy lamp replacement
- **GREAT FLEXIBILITY:** GX53 standard lamp holder
- **FUTURE-PROOFED LUMINARIES:** performances easy to upgrade to latest technology developments
- **SUITABLE FOR OUTDOOR USE:** driver fully protected against heat and humidity by silicone paste.

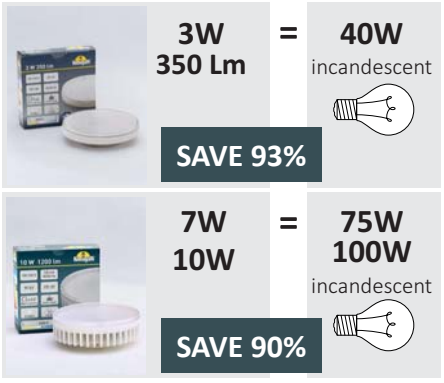

LED LAMPS

More technical details about TÜV approved Fumagalli LED Lamps on page 512.

** ADD THESE SUFFIXES TO THE REFERENCES MENTIONED IN THE CATALOGUE*

BERTINA

SMALL ROUND





MADE IN ITALY

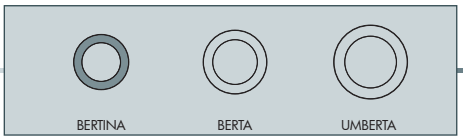

BERTINA

SMALL ROUND

BERTINA		
1B1.000.G1L	**3W**	1B1.000.G1R
1B1.000.C1L	**7W**	1B1.000.C1R
1B1.000.D1L	**10W**	1B1.000.D1R
4000K	GX53 LED LAMP INCLUDED	*3000K*

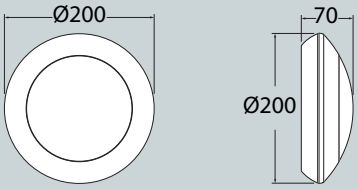

Pcs 45
Kg 30
mc 0,194

BERTA

MEDIUM ROUND

Round bulkhead lamp with **no visible screws**, made of shockproof resin material, UV-rays stabilized, rust and corrosion-free. Suitable for wall and ceiling installation. **GX53 LED** or **E27** version available. Insulation class II, Protection rating IP66.

*Plafoniera circolare **senza viti a vista**, realizzata in resina antiurto stabilizzata ai raggi UV, inattaccabile da ruggine e corrosione. Idonea per il montaggio a parete e a soffitto. Disponibile nella versione **GX53 LED** o **E27**. Classe di isolamento II, grado di protezione IP66.*



BERTA
1B2.000

1B2.000

BERTA - COMPONENTS

IP66



COVER with no visible screws made of shockproof resin material, UV-rays stabilized.

COVER senza viti a vista *realizzata in resina antiurto stabilizzata ai raggi UV.*

Opal **DIFFUSER** made of UV-rays stabilized polymethylmethacrylate (PMMA) screwed to the bulkhead base.

DIFFUSORE *opale realizzato in polimetilmetacrilato (PMMA) stabilizzato ai raggi UV da avvitare alla base della plafoniera.*

BASE made of shockproof resin material, UV-rays stabilized. Provided with GX53 lampholder or with white resin reflective plate and E27 lampholder. Complete with silicone rubber gasket to ensure high protection against external agents.

BASE *realizzata in resina antiurto, stabilizzata ai raggi UV. Fornita completa di portalampada GX53 o di piatto riflettente in resina bianca e portalampada E27. Completa di guarnizione in gomma siliconica per garantire un alto livello di protezione contro gli agenti esterni.*

BERTA

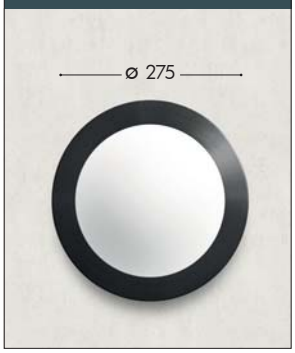

Dimensions and weight
Diameter: ø 270 mm
Depth: 80 mm
Weight: 1 Kg

Moulded colours:
Black *White* *Grey*

Diffuser PMMA:
Opal

GX53 LED



Bulkhead supplied **fully pre-wired** and complete with TÜV approved, long-life and efficient **GX53 LED lamp included.** Different wattage available.

- **COST SAVING:** long-life and efficient LED light sources
- **BUILT-IN DRIVER:** Quick and easy lamp replacement for a very simple maintenance after installation.

				*ADD. SUFFIX
GX53 LED	7 W	600 Lm	4000 K	.A1L
			3000 K	.A1R
	11 W	1300 Lm	4000 K	.B1L
			3000 K	.B1R
	18 W	2000 Lm	4000 K	.E1L
			3000 K	.E1R



7W 11W 18W = **60W 100W 150W** incandescent

SAVE 90%

E27



Bulkhead supplied **fully pre-wired** with **E27 lampholder**. White resin reflective plate designed to grant lampholder protection and isolation. Safe fixation of the electrical devices on the plate rear side.
Daylight and motion sensor available as an option. Sensor operating voltage: 220-240V (120V available on demand).

		*ADD. SUFFIX
E27 (CFL -LED)	max 160 mm	.P27
E27 + SENSOR (CFL -LED)		.PS7

LED LAMPS

More technical details about TÜV approved Fumagalli LED Lamps on page 512.

** ADD THESE SUFFIXES TO THE REFERENCES MENTIONED IN THE CATALOGUE*

BERTA

MEDIUM ROUND

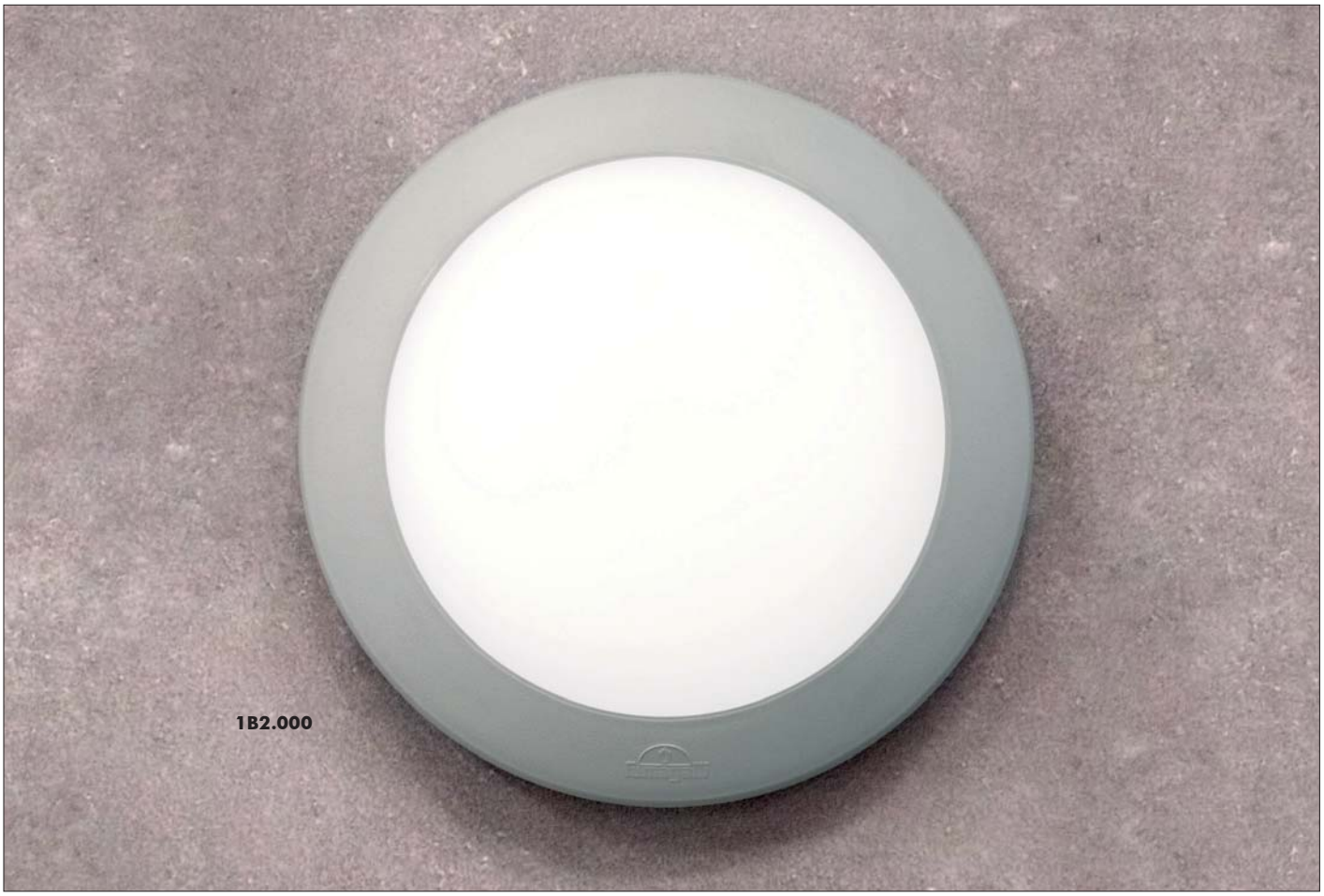



MADE IN ITALY

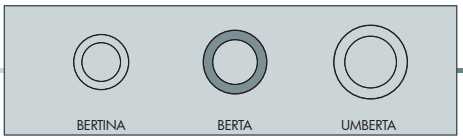

BERTA

MEDIUM ROUND

BERTA GX53		
1B2.000.A1L	**7W**	1B2.000.A1R
1B2.000.B1L	**11W**	1B2.000.B1R
1B2.000.E1L	**18W**	1B2.000.E1R
4000K	GX53 LED LAMP INCLUDED	*3000K*

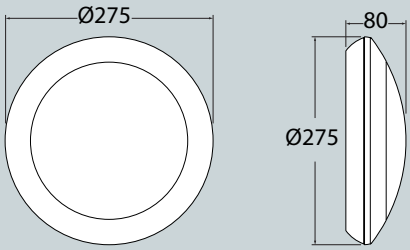

Pcs 16
Kg 20
mc 0,194

BERTA E27	
E27 lampholder	1B2.000.P27
E27 with sensor	1B2.000.PS7

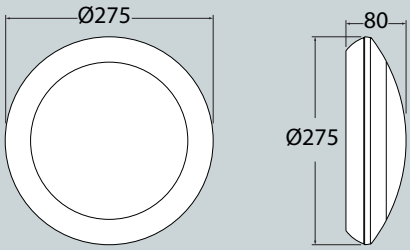

Pcs 16
Kg 16,8
mc 0,194

UMBERTA

LARGE ROUND

Round bulkhead lamp with **no visible screws.** Made of shockproof resin material, UV-rays stabilized, rust and corrosion-free. Suitable for wall and ceiling installation. **GX53 LED** or **2xE27** version available. Provided as option with motion sensor or emergency kit. Insulation class II, Protection rating IP66.

*Plafoniera circolare **senza viti a vista**, realizzata in resina antiurto stabilizzata ai raggi UV, inattaccabile da ruggine e corrosione. Idonea per il montaggio a parete e a soffitto. Disponibile nella versione a **LED GX53** o **2xE27**. Fornita anche con sensore o kit d'emergenza. Classe di isolamento II, grado di protezione IP66.*



UMBERTA
1B3.000



1B3.000

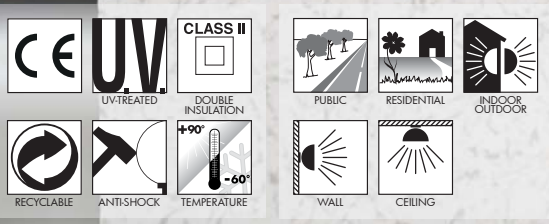

UMBERTA - COMPONENTS

IP66



COVER made of shockproof resin material, UV-rays stabilized, rust and corrosion free.

***COVER** in resina antiurto stabilizzata ai raggi UV inattaccabile da ruggine e corrosione.*

Opal **DIFFUSER** made of UV-rays stabilized polymethylmethacrylate (PMMA) screwed to the bulkhead base.

***DIFFUSORE** opale realizzato in polimetilmetacrilato (PMMA) stabilizzato ai raggi UV da avvitare alla base della plafoniera.*

BASE complete with highly heat resistant **REFLECTIVE PLATE**, suitable for the electrical devices fixation. Provided with GX53 or E27 lampholder and with silicone rubber gasket to ensure high protection against external agents.

***BASE** completa di **PIATTO RIFLETTENTE** ad alta resistenza al calore, adatto ad alloggiare gli accessori elettrici. Fornita completa di portalampada GX53 o E27 e guarnizione in gomma siliconica per garantire un alto livello di protezione contro gli agenti esterni.*

UMBERTA

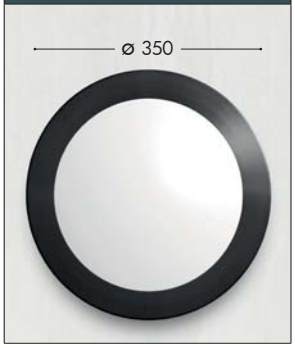

Dimensions and weight

Diameter: ø 350 mm
Depth: 94 mm
Weight: 1,3 Kg

Moulded Colours:

Black Grey White

Diffuser PMMA:

Opal

GX53 LED



Bulkhead supplied **fully pre-wired** and complete with TÜV approved, long-life and efficient **GX53 LED lamp included.** Different wattage available. Quick and easy lamp replacement for a very simple maintenance after installation.
Daylight and motion sensor available as option.

				*ADD. SUFFIX
GX53 LED	7 W	600 Lm	4000 K	.A1L
			3000 K	.A1R
	11 W	1300 Lm	4000 K	.B1L
			3000 K	.B1R
	18 W	2000 Lm	4000 K	.E1L
			3000 K	.E1R
GX53 LED + SENSOR	7 W + SENSOR	600 Lm	4000 K	.ASL
			3000 K	.ASR
	11 W + SENSOR	1300 Lm	4000 K	.BSL
			3000 K	.BSR
	18 W + SENSOR	2000 Lm	4000 K	.ESL
			3000 K	.ESR

E27



Bulkhead supplied **fully pre-wired** with single or double **E27 lampholder.**
Daylight and motion sensor available as option. Sensor operating voltage: 220-240V. (120V version available on demand).

	*ADD. SUFFIX
E27 (CFL -LED)	.E27
2x E27 (CFL -LED)	.E28
E27 + SENSOR (CFL -LED)	.ES7
2x E27 + SENSOR (CFL -LED)	.ES8



7W 11W 18W = **60W 100W 150W** incandescent

SAVE 90%

EMERGENCY VERSION



Detailed information on page 86

1B3.000.EM1

LED LAMPS

More technical details about TÜV approved Fumagalli LED Lamps on page 512.

** ADD THESE SUFFIXES TO THE REFERENCES MENTIONED IN THE CATALOGUE*

UMBERTA

LARGE ROUND



1B3.000



1B3.000

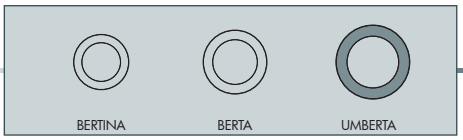

UMBERTA

LARGE ROUND

UMBERTA GX53		
1B3.000.A1L	**7W**	1B3.000.A1R
1B3.000.B1L	**11W**	1B3.000.B1R
1B3.000.E1L	**18W**	1B3.000.E1R
4000K	GX53 LED LAMP INCLUDED	*3000K*

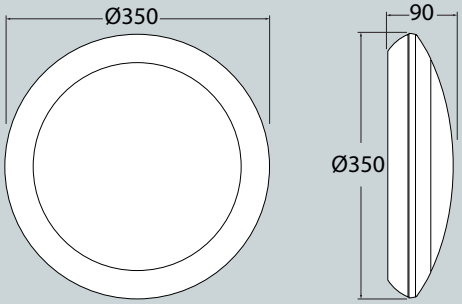

Pcs 12
Kg 22
mc 0,198

UMBERTA E27	
1xE27 lampholder	1B3.000.E27
2xE27 lampholder	1B3.000.E28
1xE27 with sensor	1B3.000.ES7
2xE27 with sensor	1B3.000.ES8

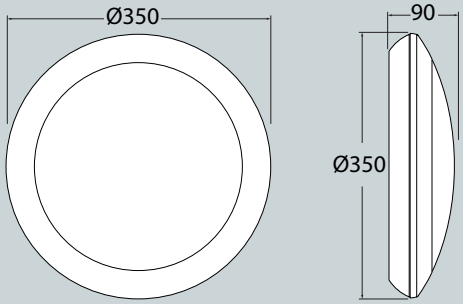

Pcs 12
Kg 19,6
mc 0,198

UMBERTA EMERGENCY

LARGE ROUND

LED MAINTAINED EMERGENCY bulkhead lamp with no visible screws. Made of shockproof resin material, UV-rays stabilized, rust and corrosion-free. Suitable for wall and ceiling installation. In case of blackout, the bulkhead switches from Normal mode to Emergency mode and keeps on working. Minimum 3 hours battery operating time. Insulation class II, Protection rating IP66.

Plafoniera a LED, RETE PIU' EMERGENZA, senza viti a vista. Realizzata in resina antiurto stabilizzata ai raggi UV, inattaccabile da ruggine e corrosione. Idonea per il montaggio a parete e a soffitto. In caso di interruzione di corrente, la plafoniera passa dalla modalità "Normale" alla modalità "Emergenza" e rimane accesa. Autonomia minima 3 ore. Classe di isolamento II, grado di protezione IP66.



UMBERTA
EMERGENCY
1B3.000.EM1

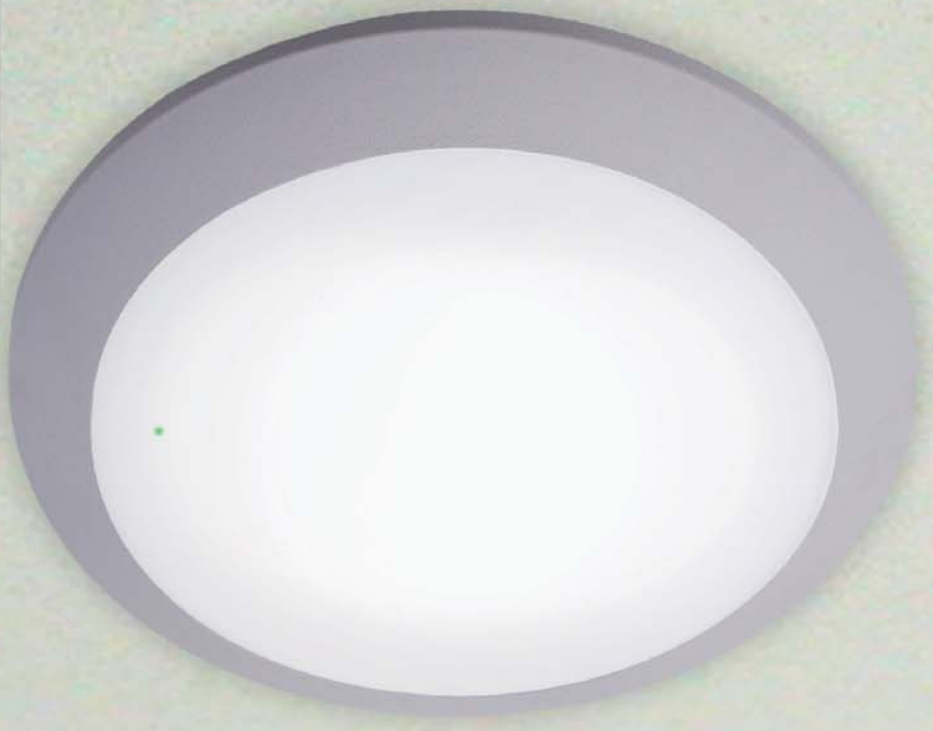

1B3.000.EM1

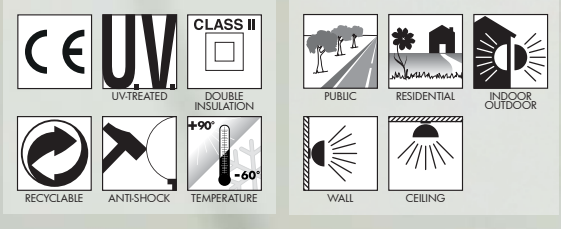

UMBERTA EMERGENCY - COMPONENTS

IP66



LED Printed Circuit Board provided with a fully-prewired **Emergency Kit**. In case of blackout the bulkhead automatically switches from Normal mode (15W - 2000 Lm) to Emergency mode (2,4W - 250 Lm) and keeps on working for the next 3 hours.

Circuito stampato a LED *fornito completo di* ***kit d'emergenza*** *pre-cablato. In caso di interruzione di corrente, la plafoniera passa dalla modalità "Normale" (15W - 2000 Lm) alla modalità "Emergenza" (2,4W - 250lm) e rimane accesa per 3 ore.*



UMBERTA



Dimensions and weight

Diameter: ø 350 mm
Depth: 94 mm
Weight: 2,3 Kg

Moulded Colours:

Black *Grey* *White*

Diffuser PMMA:

Opal

UMBERTA MAINTAINED EMERGENCY

1B3.000.EM1

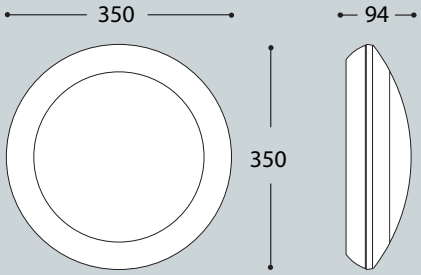

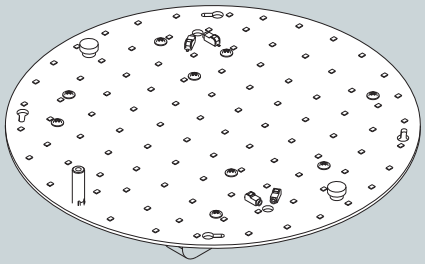

Pcs 12
Kg 25
mc 0,198

PRODUCT TYPE	Wall and Ceiling bulkhead with Emegency kit
OPERATING VOLTAGE	220~240 vAC
LUMINOUS FLUX & POWER	**2000 lumen (Normal mode), 15W 250 lumen (Emergency mode), 2.4W**
LED TYPE	Edison SMD 2835, 4000 K
CRI	>80Ra
PF (POWER FACTOR)	>0.95
BEAM ANGLE	120°
OPERATING TEMPERATURE	0~50°C
BATTERY	Ni-MH, BK370Ah3.6V,Panasonic (3.5Ah,3.6V)
BATTERY OPERATING TIME	**min 3 hours (250 lumen)**
BATTERY CHARGING TIME	24 hours
Drivers Standards	EN 61347-1, EN 61347-2-7, EN 61347-2-13, EN 62384, EN 60598-2-22 EN 55015, EN61547, EN 61000 -3-2, EN 61000-3-3
Battery Standards	EN 5501-1, EN 61000, EN 55014-2





Emergency details

15W = 150W incandescent



SAVE 90%



GREEN LED

Identifies the emergency light and shows that the system is operating correctly.



TEST BUTTON

Bulkhead provided with built-in test button to check battery status.



MAINTAINED EMERGENCY

Normal mode: 15W - 2000Lm
Emergency mode: 2.4W - 250 Lm

GELMI RANGE

ROUND

Round bulkhead lamp with ring, eyelid or grid cover. Made of shockproof resin material, UV-rays stabilized, rust and corrosion-free. Suitable for wall and ceiling installation. **GX53 LED** or **E27** version available. Insulation class II, Protection rating IP66.

*Plafoniera circolare con cover ad anello, a palpebra o a griglia. Realizzata in resina antiurto stabilizzata ai raggi UV, inattaccabile da ruggine e corrosione. Idonea per il montaggio a parete e a soffitto. Disponibile nella versione a **LED GX53** o **E27**. Classe di isolamento II, grado di protezione IP66.*

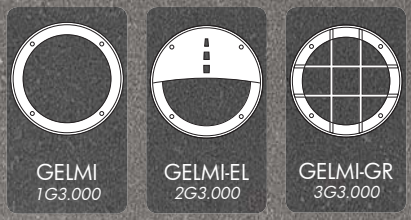

GELMI
1G3.000

GELMI-EL
2G3.000

GELMI-GR
3G3.000

2G3.000



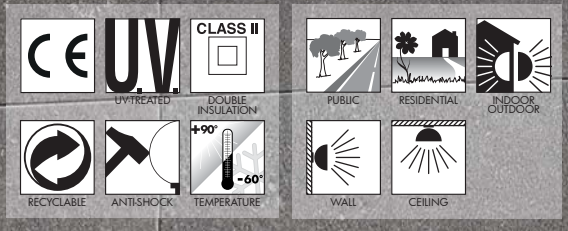

GELMI - COMPONENTS

IP66



COVER made of shockproof resin material, UV-rays stabilized. Ring, eyelid and grid versions available.

***COVER** in resina antiurto stabilizzata ai raggi UV, disponibile nella versione ad anello, a palpebra e a griglia.*

Opal **DIFFUSER** made of UV-rays stabilized polymethylmethacrylate (PMMA), with silicone rubber gasket to ensure high protection against external agents.

***DIFFUSORE** opale realizzato in polimetilmetacrilato (PMMA) stabilizzato ai raggi UV. Completo di guarnizione in gomma siliconica per garantire un alto livello di protezione contro gli agenti esterni.*

BASE made of shockproof resin material, UV-rays stabilized. Provided with GX53 lampholder or with white resin reflective plate and E27 lampholder.

***BASE** realizzata in resina antiurto, stabilizzata ai raggi UV. Fornita completa di portalampada GX53 o di piatto riflettente in resina bianca e portalampada E27.*

GELMI



Dimensions and weight

Diameter: ø 313 mm
Depth: 90 mm
Weight: 1 Kg

Moulded colours:

Black *White* *Grey*

Diffuser PMMA:

Opal

GX53 LED



Bulkhead supplied **fully pre-wired** and complete with TÜV approved, long-life and efficient **GX53 LED lamp included.** Different wattage available.

- **COST SAVING:** long-life and efficient LED light sources
- **BUILT-IN DRIVER:** Quick and easy lamp replacement for a very simple maintenance after installation.

				*ADD. SUFFIX
GX53 LED	7 W	600 Lm	4000 K	.A1L
			3000 K	.A1R
	11 W	1300 Lm	4000 K	.B1L
			3000 K	.B1R
	18 W	2000 Lm	4000 K	.E1L
			3000 K	.E1R



7W 11W 18W = **60W 100W 150W** incandescent

SAVE 90%

E27



Bulkhead supplied **fully pre-wired** with **E27 lampholder**. White resin reflective plate designed to grant lampholder protection and isolation. Safe fixation of the electrical devices on the plate rear side.
Daylight and motion sensor available as an option. Sensor operating voltage: 220-240V (120V available on demand).

		*ADD. SUFFIX
E27 (CFL -LED)	max 160 mm	.E27
E27 + SENSOR (CFL -LED)		.ES7

LED LAMPS

More technical details about TÜV approved Fumagalli LED Lamps on page 512.

** ADD THESE SUFFIXES TO THE REFERENCES MENTIONED IN THE CATALOGUE*

GELMI RANGE

ROUND







MADE IN ITALY

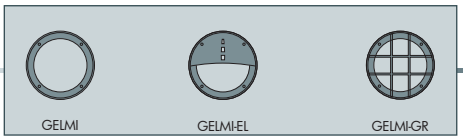

GELMI RANGE

ROUND

GELMI GX53		
1G3.000.A1L	**7W**	1G3.000.A1R
1G3.000.B1L	**11W**	1G3.000.B1R
1G3.000.E1L	**18W**	1G3.000.E1R
4000K	GX53 LED LAMP INCLUDED	*3000K*

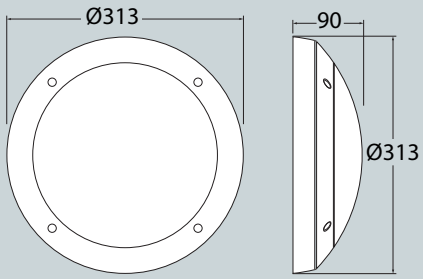

Pcs 16
Kg 20
mc 0,194

GELMI E27	
E27 lampholder	1G3.000.E27
E27 with sensor	1G3.000.ES7

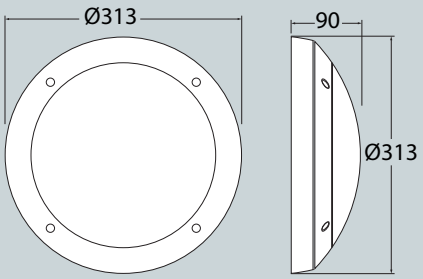

Pcs 16
Kg 16,8
mc 0,194

GELMI-EL GX53		
2G3.000.A1L	**7W**	2G3.000.A1R
2G3.000.B1L	**11W**	2G3.000.B1R
2G3.000.E1L	**18W**	2G3.000.E1R
4000K	GX53 LED LAMP INCLUDED	*3000K*

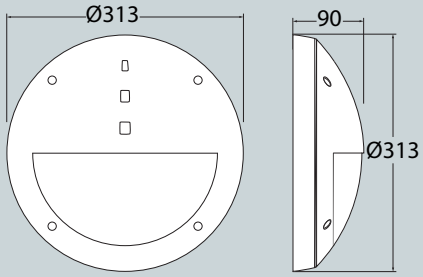

Pcs 16
Kg 20
mc 0,194

GELMI-EL E27	
E27 lampholder	2G3.000.E27
E27 with sensor	2G3.000.ES7

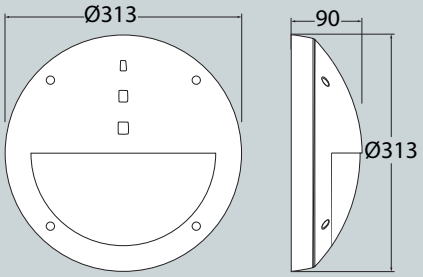

Pcs 16
Kg 16,8
mc 0,194

GELMI-GR GX53		
3G3.000.A1L	**7W**	3G3.000.A1R
3G3.000.B1L	**11W**	3G3.000.B1R
3G3.000.E1L	**18W**	3G3.000.E1R
4000K	GX53 LED LAMP INCLUDED	*3000K*

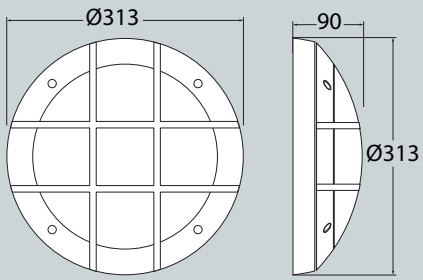

Pcs 16
Kg 20
mc 0,194

GELMI-GR E27	
E27 lampholder	3G3.000.E27
E27 with sensor	3G3.000.ES7

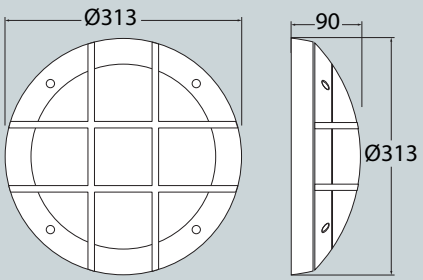

Pcs 16
Kg 16,8
mc 0,194

DANZI RANGE

OVAL

Oval bulkhead lamp with ring, eyelid or grid cover. Made of shockproof resin material, UV-rays stabilized, rust and corrosion-free. Suitable for wall and ceiling installation. **GX53 LED** or **E27** version available. Insulation class II, Protection rating IP66.

Plafoniera ovale con cover ad anello, a palpebra o a griglia. Realizzata in resina antiurto stabilizzata ai raggi UV, inattaccabile da ruggine e corrosione. Idonea per il montaggio a parete e a soffitto. Disponibile nella versione a ***LED GX53*** *o* ***E27.*** *Classe di isolamento II, grado di protezione IP66.*


DANZI
1D3.000


DANZI-VE
2D3.000


DANZI-GR
3D3.000



1D3.000

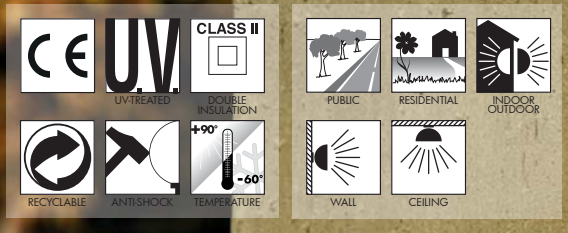

MADE IN ITALY

DANZI - COMPONENTS

IP66



COVER made of shockproof resin material, UV-rays stabilized. Ring, eyelid and grid versions available.

***COVER** in resina antiurto stabilizzata ai raggi UV, disponibile nella versione ad anello, a palpebra e a griglia.*

Opal **DIFFUSER** made of UV-rays stabilized polymethylmethacrylate (PMMA), with silicone rubber gasket to ensure high protection against external agents.

***DIFFUSORE** opale realizzato in polimetilmetacrilato (PMMA) stabilizzato ai raggi UV. Completo di guarnizione in gomma siliconica per garantire un alto livello di protezione contro gli agenti esterni.*

BASE made of shockproof resin material, UV-rays stabilized. Provided with GX53 lampholder or with white resin reflective plate and E27 lampholder.

***BASE** realizzata in resina antiurto, stabilizzata ai raggi UV. Fornita completa di portalampada GX53 o di piatto riflettente in resina bianca e portalampada E27.*

DANZI



Dimensions and weight
Width: 245 mm
Height: 338 mm
Depth: 90 mm
Weight: 1 Kg

Moulded colours:
Black *White* *Grey*

Diffuser PMMA:
Opal

GX53 LED



Bulkhead supplied **fully pre-wired** and complete with TÜV approved, long-life and efficient **GX53 LED lamp included.** Different wattage available.

- **COST SAVING:** long-life and efficient LED light sources
- **BUILT-IN DRIVER:** Quick and easy lamp replacement for a very simple maintenance after installation.

				*ADD. SUFFIX
GX53 LED	7 W	600 Lm	4000 K	.A1L
			3000 K	.A1R
	11 W	1300 Lm	4000 K	.B1L
			3000 K	.B1R
	18 W	2000 Lm	4000 K	.E1L
			3000 K	.E1R



7W 11W 18W = **60W 100W 150W** incandescent

SAVE 90%

E27



Bulkhead supplied **fully pre-wired** with **E27 lampholder**. White resin reflective plate designed to grant lampholder protection and isolation. Safe fixation of the electrical devices on the plate rear side.
Daylight and motion sensor available as an option. Sensor operating voltage: 220-240V (120V available on demand).

		*ADD. SUFFIX
E27 (CFL -LED)	max 160 mm	.E27
E27 + SENSOR (CFL -LED)		.ES7

LED LAMPS

More technical details about TÜV approved Fumagalli LED Lamps on page 512.

** ADD THESE SUFFIXES TO THE REFERENCES MENTIONED IN THE CATALOGUE*

DANZI RANGE

OVAL







MADE IN ITALY



DANZI RANGE

OVAL

DANZI GX53		
1D3.000.A1L	**7W**	1D3.000.A1R
1D3.000.B1L	**11W**	1D3.000.B1R
1D3.000.E1L	**18W**	1D3.000.E1R
4000K	GX53 LED LAMP INCLUDED	*3000K*

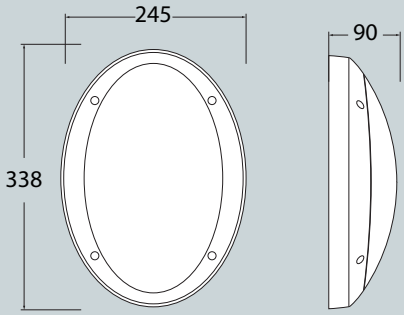

Pcs 16
Kg 18,7
mc 0,194

DANZI E27	
E27 lampholder	1D3.000.E27
E27 with sensor	1D3.000.ES7

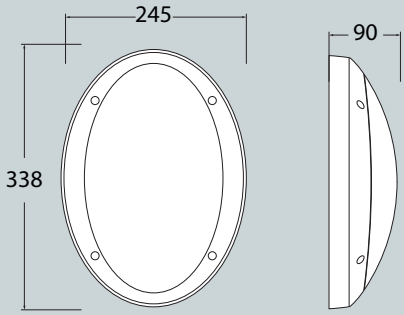

Pcs 16
Kg 15,5
mc 0,194

DANZI-VE GX53		
2D3.000.A1L	**7W**	2D3.000.A1R
2D3.000.B1L	**11W**	2D3.000.B1R
2D3.000.E1L	**18W**	2D3.000.E1R
4000K	GX53 LED LAMP INCLUDED	*3000K*

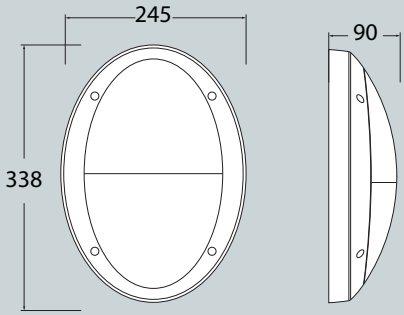

Pcs 16
Kg 18,7
mc 0,194

DANZI-VE E27	
E27 lampholder	2D3.000.E27
E27 with sensor	2D3.000.ES7

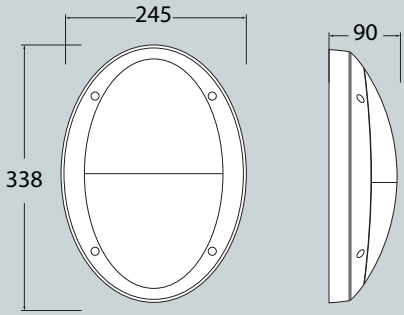

Pcs 16
Kg 15,5
mc 0,194

DANZI-GR GX53		
3D3.000.A1L	**7W**	3D3.000.A1R
3D3.000.B1L	**11W**	3D3.000.B1R
3D3.000.E1L	**18W**	3D3.000.E1R
4000K	GX53 LED LAMP INCLUDED	*3000K*

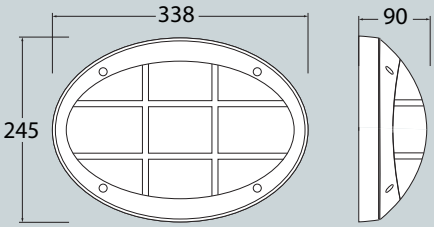

Pcs 16
Kg 18,7
mc 0,194

DANZI-GR E27	
E27 lampholder	3D3.000.E27
E27 with sensor	3D3.000.ES7

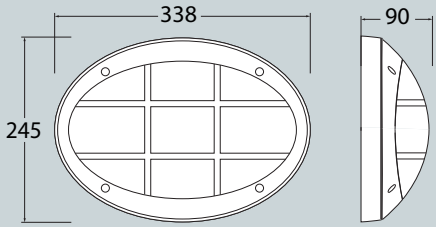

Pcs 16
Kg 15,5
mc 0,194

STUCCHI

SQUARE

Square bulkhead lamp made of shockproof resin material, UV-rays stabilized, rust and corrosion-free. Suitable for wall and ceiling installation. Supplied as option with colored backlit base. **GX53 LED** or **E27** version available. Insulation class II, Protection rating IP66.

*Plafoniera quadra realizzata in resina antiurto stabilizzata ai raggi UV, inattaccabile da ruggine e corrosione. Idonea per il montaggio a parete e a soffitto. Disponibile anche con base per retroilluminazione colorata. Fornita nella versione a **LED GX53** o **E27.** Classe di isolamento II, grado di protezione IP66.*



STUCCHI
1U3.000

1U3.000.BU1



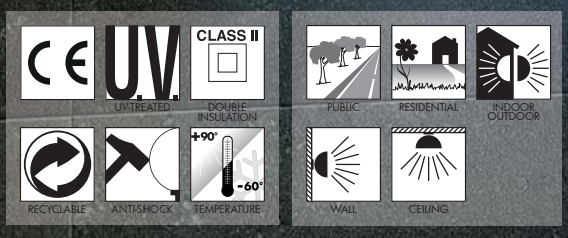

STUCCHI - COMPONENTS

IP66



COVER made of shockproof resin material, UV-rays stabilized.

***COVER** in resina antiurto stabilizzata ai raggi UV.*

Opal **DIFFUSER** made of UV-rays stabilized polymethylmethacrylate (PMMA), with silicone rubber gasket to ensure high protection against external agents.

***DIFFUSORE** opale realizzato in polimetilmetacrilato (PMMA) stabilizzato ai raggi UV. Completo di guarnizione in gomma siliconica per garantire un alto livello di protezione contro gli agenti esterni.*

BASE made of shockproof resin material, provided with E27 or GX53 lampholder. Available in different backlit colours to create a coloured effect on wall and ceilings.

***BASE** realizzata in resina antiurto. Fornita completa di portalampada E27 o GX53. Disponibile in diversi colori per creare una retroilluminazione colorata su pareti e soffitti.*

Clear .CL1	Blue .BU1	Pink .PK1	Green .GN1	Orange .OR1



STUCCHI



Dimensions and weight
Height: 310 mm
Width: 310 mm
Depth: 90 mm
Weight: 1 Kg

Moulded colours:
Black *White* *Grey*

Diffuser PMMA:
Opal

GX53 LED



Bulkhead supplied **fully pre-wired** and complete with TÜV approved, long-life and efficient **GX53 LED lamp included.** Different wattage available.

- **COST SAVING:** long-life and efficient LED light sources
- **BUILT-IN DRIVER:** Quick and easy lamp replacement for a very simple maintenance after installation.

			*ADD. SUFFIX	
GX53 LED	7 W	600 Lm	4000 K	.A1L
			3000 K	.A1R
	11 W	1300 Lm	4000 K	.B1L
			3000 K	.B1R
	18 W	2000 Lm	4000 K	.E1L
			3000 K	.E1R



7W 11W 18W = **60W 100W 150W** incandescent

SAVE 90%

E27



Bulkhead supplied **fully pre-wired** with **E27 lampholder**. White resin reflective plate designed to grant lampholder protection and isolation. Safe fixation of the electrical devices on the plate rear side.
Daylight and motion sensor available as an option. Sensor operating voltage: 220-240V (120V available on demand).

		*ADD. SUFFIX
E27 (CFL -LED)	max 160 mm	.E27
E27 + SENSOR (CFL -LED)		.ES7

LED LAMPS

More technical details about TÜV approved Fumagalli LED Lamps on page 512.

** ADD THESE SUFFIXES TO THE REFERENCES MENTIONED IN THE CATALOGUE*

STUCCHI

SQUARE



1U3.000.PK1



1U3.000

MADE IN ITALY

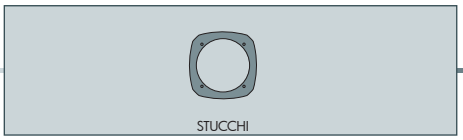

STUCCHI GX53		
1U3.000.A1L	**7W**	1U3.000.A1R
1U3.000.B1L	**11W**	1U3.000.B1R
1U3.000.E1L	**18W**	1U3.000.E1R
4000K	GX53 LED LAMP INCLUDED	*3000K*

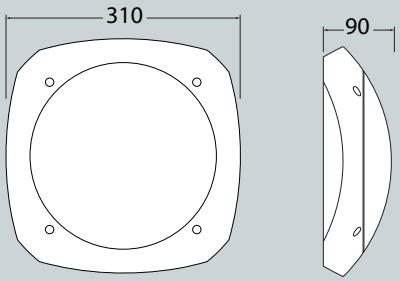

Pcs 16
Kg 20
mc 0,194

STUCCHI E27	
E27 lampholder	1U3.000.E27
E27 with sensor	1U3.000.ES7

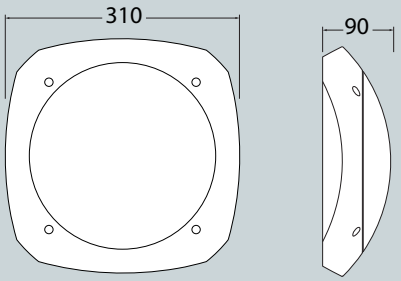

Pcs 16
Kg 16.8
mc 0,194

CECCHI

RECTANGULAR

Rectangular bulkhead lamp made of shockproof resin material, UV-rays stabilized, rust and corrosion-free. Suitable for wall and ceiling installation. Supplied as option with coloured backlit base. **GX53 LED** or **E27** version available. Insulation class II, Protection rating IP66.

*Plafoniera rettangolare realizzata in resina antiurto stabilizzata ai raggi UV, inattaccabile da ruggine e corrosione. Idonea per il montaggio a parete e a soffitto. Disponibile anche con base per retroilluminazione colorata. Fornita nella versione a **LED GX53** o **E27.** Classe di isolamento II, grado di protezione IP66.*



1H3.000.CL1



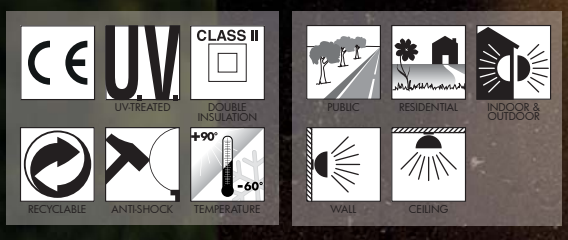

CECCHI COMPONENTS

IP66



COVER made of shockproof resin material, UV-rays stabilized.

COVER *in resina antiurto stabilizzata ai raggi UV.*

Opal **DIFFUSER** made of UV-rays stabilized polymethylmethacrylate (PMMA), with silicone rubber gasket to ensure high protection against external agents.

DIFFUSORE *opale realizzato in polimetilmetacrilato (PMMA) stabilizzato ai raggi UV. Completo di guarnizione in gomma siliconica per garantire un alto livello di protezione contro gli agenti esterni.*

BASE made of shockproof resin material, provided with E27 or GX53 lampholder. Available in different backlit colours to create a coloured effect on wall and ceilings.

BASE *realizzata in resina antiurto. Fornita completa di portalampada E27 o GX53. Disponibile in diversi colori per creare una retroilluminazione colorata su pareti e soffitti.*



CECCHI



Dimensions and weight
Width: 338 mm
Height: 245 mm
Depth: 90 mm
Weight: 1 Kg

Moulded colours:
Black *White* *Grey*

Diffuser PMMA:
Opal

GX53 LED



Bulkhead supplied **fully pre-wired** and complete with TÜV approved, long-life and efficient **GX53 LED lamp included.** Different wattage available.

- **COST SAVING:** long-life and efficient LED light sources
- **BUILT-IN DRIVER:** Quick and easy lamp replacement for a very simple maintenance after installation.

				*ADD. SUFFIX
GX53 LED	7 W	600 Lm	4000 K	.A1L
			3000 K	.A1R
	11 W	1300 Lm	4000 K	.B1L
			3000 K	.B1R
	18 W	2000 Lm	4000 K	.E1L
			3000 K	.E1R



7W 11W 18W = **60W 100W 150W** incandescent

SAVE 90%

E27



Bulkhead supplied **fully pre-wired** with **E27 lampholder.** White resin reflective plate designed to grant lampholder protection and isolation. Safe fixation of the electrical devices on the plate rear side.
Daylight and motion sensor available as an option. Sensor operating voltage: 220-240V (120V available on demand).

		*ADD. SUFFIX
E27 (CFL -LED)	max 160 mm	.E27
E27 + SENSOR (CFL -LED)		.ES7

LED LAMPS

More technical details about TÜV approved Fumagalli LED Lamps on page 512.

** ADD THESE SUFFIXES TO THE REFERENCES MENTIONED IN THE CATALOGUE*

CECCHI

RECTANGULAR





MADE IN ITALY



CECCHI

CECCHI

RECTANGULAR

CECCHI GX53		
1H3.000.A1L	**7W**	1H3.000.A1R
1H3.000.B1L	**11W**	1H3.000.B1R
1H3.000.E1L	**18W**	1H3.000.E1R
4000K	GX53 LED LAMP INCLUDED	*3000K*

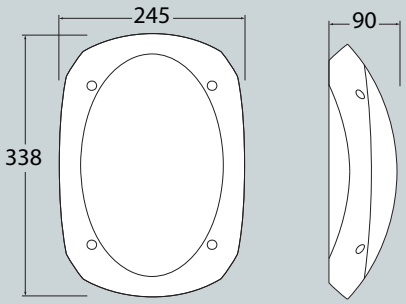

Pcs 16
Kg 18,7
mc 0,194

CECCHI E27	
E27 lampholder	1H3.000.E27
E27 with sensor	1H3.000.ES7

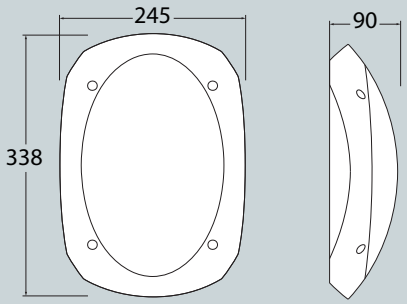

Pcs 16
Kg 15,5
mc 0,194

RITA

CLASSIC ROUND

Round bulkhead lamp in classic style, made of shockproof resin material, UV-rays stabilized, rust and corrosion-free. Suitable for wall and ceiling installation. **GX53 LED** or **E27** version available. Insulation class II, Protection rating IP66.

*Plafoniera circolare in stile classico, realizzata in resina antiurto stabilizzata ai raggi UV, inattaccabile da ruggine e corrosione. Idonea per il montaggio a parete e a soffitto. Disponibile nella versione a **LED GX53** o **E27.** Classe di isolamento II, grado di protezione IP66.*

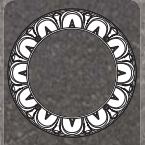

RITA
1T3.000



1T3.000

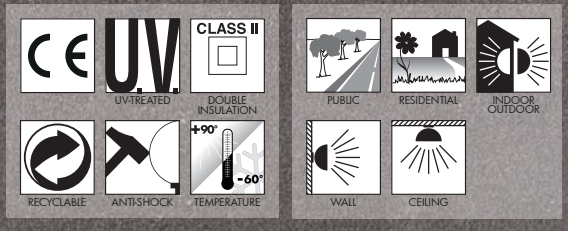

RITA COMPONENTS

IP66



COVER with classic design made of shockproof resin material, UV-rays stabilized.

COVER *in stile classico realizzata in resina antiurto stabilizzata ai raggi UV.*

Opal **DIFFUSER** made of UV-rays stabilized polymethylmethacrylate (PMMA), with silicone rubber gasket to ensure high protection against external agents.

DIFFUSORE *opale realizzato in polimetilmetacrilato (PMMA) stabilizzato ai raggi UV. Completo di guarnizione in gomma siliconica per garantire un alto livello di protezione contro gli agenti esterni.*

BASE made of shockproof resin material, UV-rays stabilized. Provided with GX53 lampholder or with white resin reflective plate and E27 lampholder.

BASE *realizzata in resina antiurto, stabilizzata ai raggi UV. Fornita completa di portalampada GX53 o di piatto riflettente in resina bianca e portalampada E27.*

RITA



Dimensions and weight
Diameter: ø 355 mm
Depth: 90 mm
Weight: 1 Kg

Moulded colours:
Black *White*

Painted colours:
Antique green *Antique bronze*

Diffuser PMMA:
Opal

GX53 LED



Bulkhead supplied **fully pre-wired** and complete with TÜV approved, long-life and efficient **GX53 LED lamp included.** Different wattage available.

- **COST SAVING:** long-life and efficient LED light sources
- **BUILT-IN DRIVER:** Quick and easy lamp replacement for a very simple maintenance after installation.

				*ADD. SUFFIX
GX53 LED	7 W	600 Lm	4000 K	.A1L
			3000 K	.A1R
	11 W	1300 Lm	4000 K	.B1L
			3000 K	.B1R
	18 W	2000 Lm	4000 K	.E1L
			3000 K	.E1R



7W 11W 18W = **60W 100W 150W** incandescent

SAVE 90%

E27



Bulkhead supplied **fully pre-wired** with **E27 lampholder**. White resin reflective plate designed to grant lampholder protection and isolation. Safe fixation of the electrical devices on the plate rear side.
Daylight and motion sensor available as an option. Sensor operating voltage: 220-240V (120V available on demand).

		*ADD. SUFFIX
E27 (CFL -LED)	max 160 mm	.E27
E27 + SENSOR (CFL -LED)		.ES7

LED LAMPS

More technical details about TÜV approved Fumagalli LED Lamps on page 512.

** ADD THESE SUFFIXES TO THE REFERENCES MENTIONED IN THE CATALOGUE*

RITA

CLASSIC ROUND



MADE IN ITALY

RITA GX53		
1T3.000.A1L	**7W**	1T3.000.A1R
1T3.000.B1L	**11W**	1T3.000.B1R
1T3.000.E1L	**18W**	1T3.000.E1R

4000K GX53 LED LAMP INCLUDED *3000K*

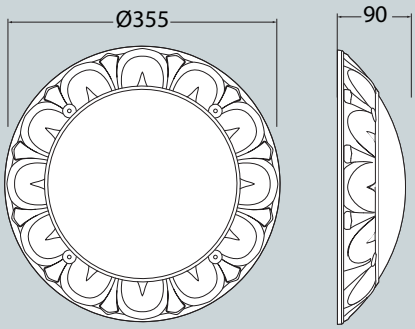

Pcs 12
Kg 17,8
mc 0,198

RITA E27	
E27 lampholder	1T3.000.E27
E27 with sensor	1T3.000.ES7

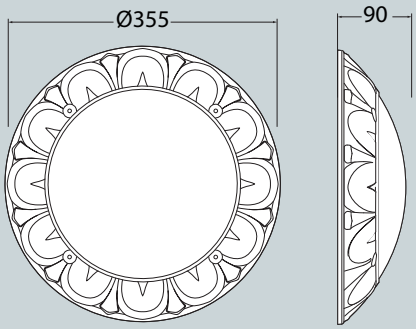

Pcs 12
Kg 15,4
mc 0,198

LUCIA RANGE

ROUND

Round bulkhead lamp with ring, eyelid or guard cover. Made of shockproof resin material, UV-rays stabilized, rust and corrosion-free. Suitable for ceiling, wall and post installation also with bracket angled at 35°. Supplied as option with coloured backlit base. **GX53 LED** or **E27** version available. Insulation class II, Protection rating IP66.

*Plafoniera circolare con cover ad anello, a palpebra o a manubrio. Realizzata in resina antiurto stabilizzata ai raggi UV, inattaccabile da ruggine e corrosione. Idonea per il montaggio a parete, a soffitto e a palo anche con braccio angolato a 35°. Disponibile anche con base per retroilluminazione colorata. Fornita nella versione a **LED GX53** o **E27.** Classe di isolamento II, grado di protezione IP66.*

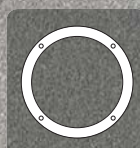
LUCIA
1R3.000


LUCIA-EL
2R3.000


LUCIA-GD
3R3.000


REMI/LUCIA
1R3.602


REMI/LUCIA-EL
2R3.602


REMI/LUCIA-GD
3R3.602



1R3.000.OR1

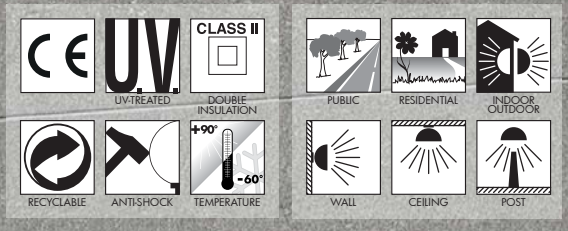

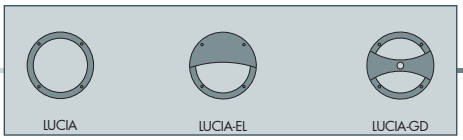

LUCIA COMPONENTS

IP66



COVER made of shockproof resin material, UV-rays stabilized. Ring, eyelid and grid versions available.

COVER *in resina antiurto stabilizzata ai raggi UV, disponibile nella versione ad anello, a palpebra e a griglia.*

Opal **DIFFUSER** made of UV-rays stabilized polymethylmethacrylate (PMMA), with silicone rubber gasket to ensure high protection against external agents.

DIFFUSORE *opale realizzato in polimetilmetacrilato (PMMA) stabilizzato ai raggi UV. Completo di guarnizione in gomma siliconica per garantire un alto livello di protezione contro gli agenti esterni.*

BASE made of shockproof resin material, provided with E27 or GX53 lampholder. Available in different backlit colours to create a coloured effect on wall and ceilings.

BASE *realizzata in resina antiurto. Fornita completa di portalampada E27 o GX53. Disponibile in diversi colori per creare una retroilluminazione colorata su pareti e soffitti.*



LUCIA

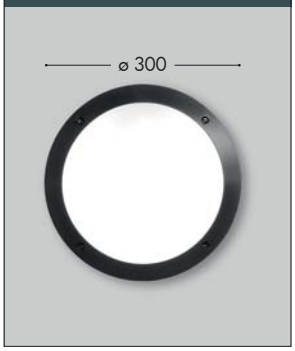

Dimensions and weight

Diameter: ø 300 mm
Depth: 90 mm
Weight: 1 Kg

Moulded colours:

Black *White* *Grey*

Diffuser PMMA:

Opal

GX53 LED



Bulkhead supplied **fully pre-wired** and complete with TÜV approved, long-life and efficient **GX53 LED lamp included.** Different wattage available.

- **COST SAVING:** long-life and efficient LED light sources
- **BUILT-IN DRIVER:** Quick and easy lamp replacement for a very simple maintenance after installation.

				*ADD. SUFFIX
GX53 LED	7 W	600 Lm	4000 K	.A1L
			3000 K	.A1R
	11 W	1300 Lm	4000 K	.B1L
			3000 K	.B1R
	18 W	2000 Lm	4000 K	.E1L
			3000 K	.E1R



7W 11W 18W = **60W 100W 150W** incandescent

SAVE 90%

E27



Bulkhead supplied **fully pre-wired** with **E27 lampholder**. White resin reflective plate designed to grant lampholder protection and isolation. Safe fixation of the electrical devices on the plate rear side.
Daylight and motion sensor available as an option. Sensor operating voltage: 220-240V (120V available on demand).

		*ADD. SUFFIX
E27 (CFL -LED)	max 160 mm	.E27
E27 + SENSOR (CFL -LED)		.ES7

POST VERSION



Lucia bulkhead range can be mounted on a pole with or without an angled bracket.

** ADD THESE SUFFIXES TO THE REFERENCES MENTIONED IN THE CATALOGUE*

LED LAMPS

More technical details about TÜV approved Fumagalli LED Lamps on page 512.

LUCIA RANGE

ROUND









MADE IN ITALY

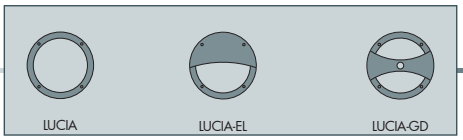

LUCIA RANGE

ROUND

LUCIA E27

1R3.000.E27

Pcs 16
Kg 16,8
mc 0,194

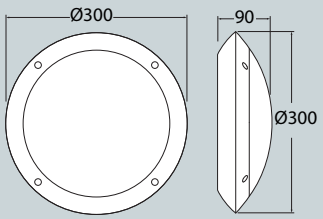

4000K *3000K*

LUCIA GX53		
1R3.000.A1L	**7W**	1R3.000.A1R
1R3.000.B1L	**11W**	1R3.000.B1R
1R3.000.E1L	**18W**	1R3.000.E1R

GABRI/ LUCIA 1L

1R3.613.010

Pcs 1
Kg 4
mc 0,097

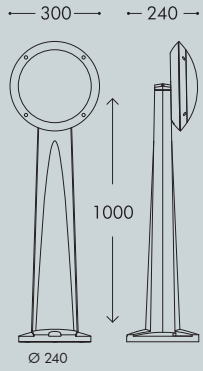

GABRI/ LUCIA 2L

1R3.613.020

Pcs 1
Kg 5
mc 0,097

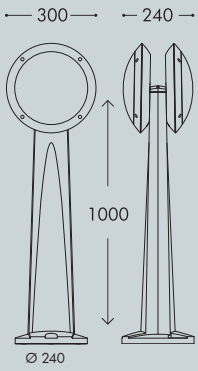

MINIGABRI/ LUCIA 1L

1R3.612.010

Pcs 1
Kg 3,5
mc 0,065

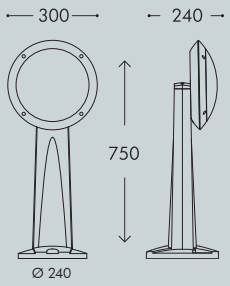

MINIGABRI/ LUCIA 2L

1R3.612.020

Pcs 1
Kg 4,5
mc 0,065

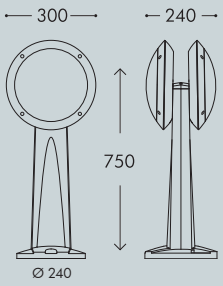

LUCIA-EL E27

2R3.000.E27

Pcs 16
Kg 16,8
mc 0,194

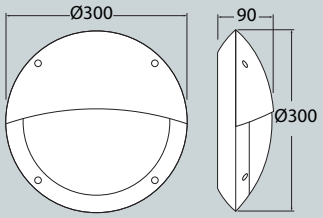

4000K *3000K*

LUCIA-EL GX53		
2R3.000.A1L	**7W**	2R3.000.A1R
2R3.000.B1L	**11W**	2R3.000.B1R
2R3.000.E1L	**18W**	2R3.000.E1R

GABRI/ LUCIA-EL 1L

2R3.613.010

Pcs 1
Kg 4
mc 0,097

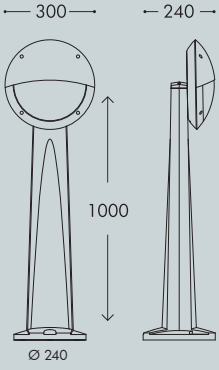

GABRI/ LUCIA-EL 2L

2R3.613.020

Pcs 1
Kg 5
mc 0,097

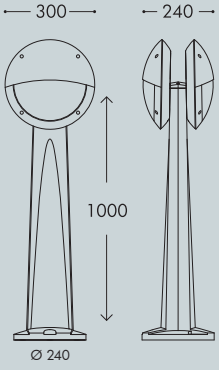

MINIGABRI/ LUCIA-EL 1L

2R3.612.010

Pcs 1
Kg 3,5
mc 0,065

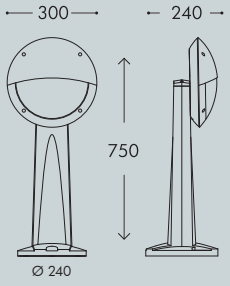

MINIGABRI/ LUCIA-EL 2L

2R3.612.020

Pcs 1
Kg 4,5
mc 0,065

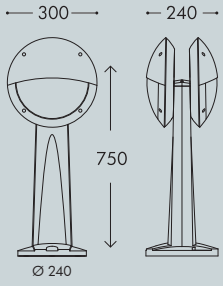

LUCIA-GD E27

3R3.000.E27

Pcs 16
Kg 16,8
mc 0,194

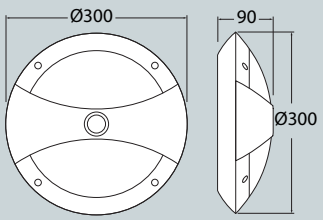

4000K *3000K*

LUCIA-GD GX53		
3R3.000.A1L	**7W**	3R3.000.A1R
3R3.000.B1L	**11W**	3R3.000.B1R
3R3.000.E1L	**18W**	3R3.000.E1R

GABRI/ LUCIA-GD 1L

3R3.613.010

Pcs 1
Kg 4
mc 0,097

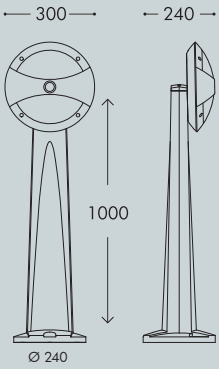

GABRI/ LUCIA-GD 2L

3R3.613.020

Pcs 1
Kg 5
mc 0,097

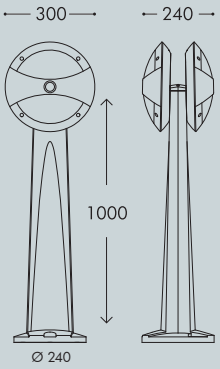

MINIGABRI/ LUCIA-GD 1L

3R3.612.010

Pcs 1
Kg 3,5
mc 0,065

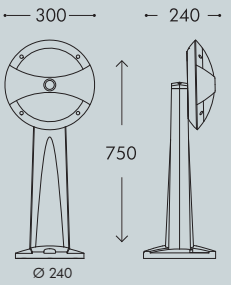

MINIGABRI/ LUCIA-GD 2L

3R3.612.020

Pcs 1
Kg 4,5
mc 0,065

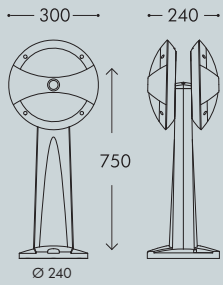

REMI/LUCIA RANGE

ROUND









MADE IN ITALY

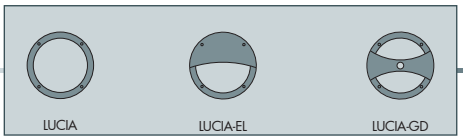

REMI/LUCIA RANGE

ROUND

REMI/LUCIA E27

1R3.602.E27

Pcs 16
Kg 20
mc 0,194

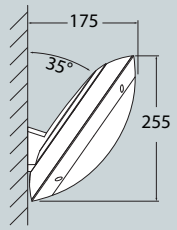

4000K 3000K

REMI/LUCIA GX53		
1R3.602.A1L	**7W**	1R3.602.A1R
1R3.602.B1L	**11W**	1R3.602.B1R
1R3.602.E1L	**18W**	1R3.602.E1R

GABRI REMI/LUCIA 1L

1R3.613.X10

Pcs 1
Kg 4,5
mc 0,097

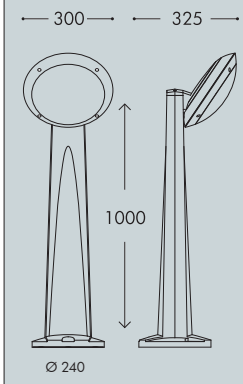

GABRI REMI/LUCIA 2L

1R3.613.X20

Pcs 1
Kg 6
mc 0,097

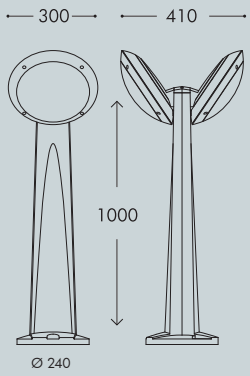

MINIGABRI REMI/LUCIA 1L

1R3.612.X10

Pcs 1
Kg 3,5
mc 0,065

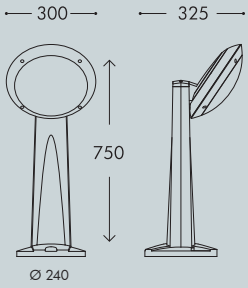

MINIGABRI REMI/LUCIA 2L

1R3.612.X20

Pcs 1
Kg 5
mc 0,065

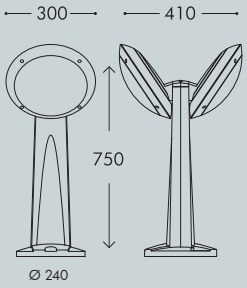

REMI/LUCIA-EL E27

2R3.602.E27

Pcs 16
Kg 20
mc 0,194

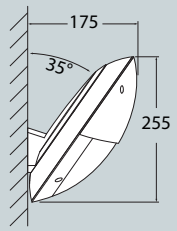

4000K 3000K

REMI/LUCIA-EL GX53		
2R3.602.A1L	**7W**	2R3.602.A1R
2R3.602.B1L	**11W**	2R3.602.B1R
2R3.602.E1L	**18W**	2R3.602.E1R

GABRI REMI/LUCIA-EL 1L

2R3.613.X10

Pcs 1
Kg 4,5
mc 0,097

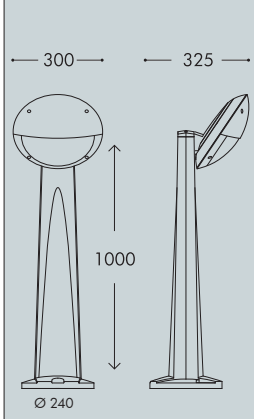

GABRI REMI/LUCIA-EL 2L

2R3.613.X20

Pcs 1
Kg 6
mc 0,097

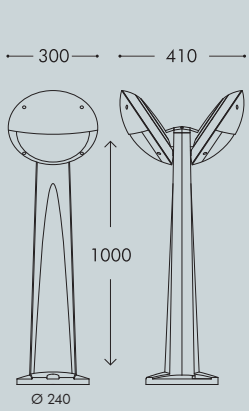

MINIGABRI REMI/LUCIA-EL 1L

2R3.612.X10

Pcs 1
Kg 3,5
mc 0,065

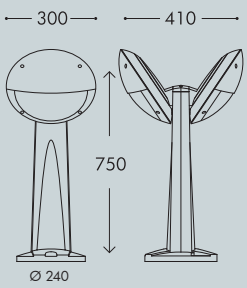

MINIGABRI REMI/LUCIA-EL 2L

2R3.612.X20

Pcs 1
Kg 5
mc 0,065

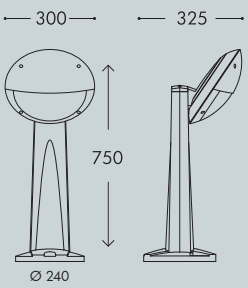

REMI/LUCIA-GD E27

3R3.602.E27

Pcs 16
Kg 20
mc 0,194

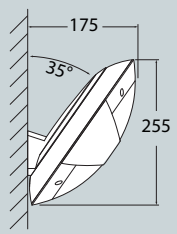

4000K 3000K

REMI/LUCIA-GD GX53		
3R3.602.A1L	**7W**	3R3.602.A1R
3R3.602.B1L	**11W**	3R3.602.B1R
3R3.602.E1L	**18W**	3R3.602.E1R

GABRI REMI/LUCIA-GD 1L

3R3.613.X10

Pcs 1
Kg 4,5
mc 0,097

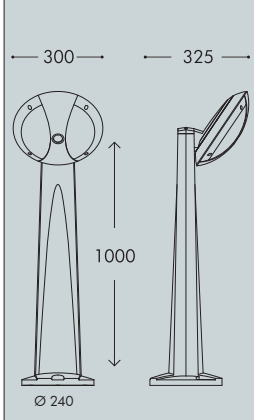

GABRI REMI/LUCIA-GD 2L

3R3.613.X20

Pcs 1
Kg 6
mc 0,097

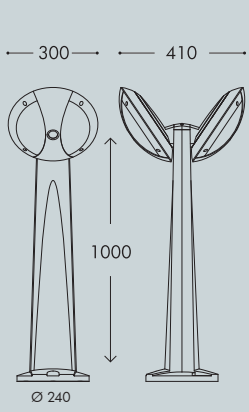

MINIGABRI REMI/LUCIA-GD 1L

3R3.612.X10

Pcs 1
Kg 3,5
mc 0,065

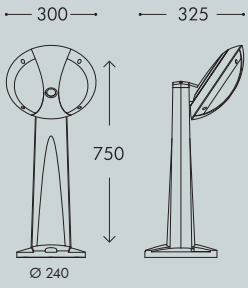

MINIGABRI REMI/LUCIA-GD 2L

3R3.612.X20

Pcs 1
Kg 5
mc 0,065

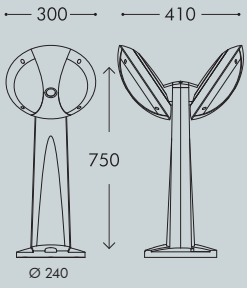

MADDI RANGE

OVAL

Oval bulkhead lamp with ring, vertical eyelid or horizontal eyelid cover. Made of shockproof resin material, UV-rays stabilized, rust and corrosion-free. Suitable for wall, ceiling and post installation also with bracket angled at 35°. Supplied as option with coloured backlit base. **GX53 LED** or **E27** version available. Insulation class II, Protection rating IP66.

*Plafoniera ovale con cover ad anello o a palpebra (orizzontale o verticale). Realizzata in resina antiurto stabilizzata ai raggi UV, inattaccabile da ruggine e corrosione. Idonea per il montaggio a parete, a soffitto e a palo anche con braccio angolato a 35°. Disponibile anche con base per retroilluminazione colorata. Fornita nella versione a **LED GX53** o **E27.** Classe di isolamento II, grado di protezione IP66.*

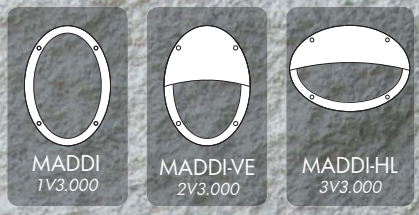

MADDI
1V3.000

MADDI-VE
2V3.000

MADDI-HL
3V3.000



REMI/MADDI
1V3.602



REMI/MADDI-VE
2V3.602



REMI/MADDI-HL
3V3.602



1V3.000

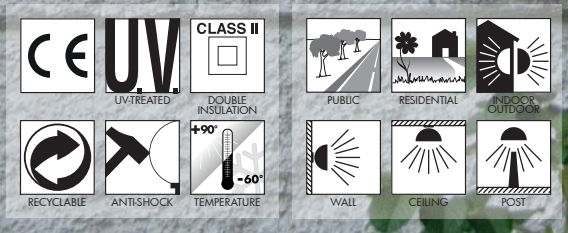

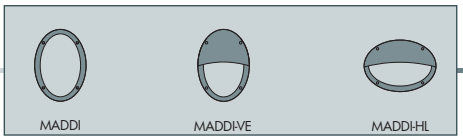

MADDI RANGE

OVAL

MADDI COMPONENTS

IP66



COVER made of shockproof resin material, UV-rays stabilized. Ring, eyelid and grid versions available.

***COVER** in resina antiurto stabilizzata ai raggi UV, disponibile nella versione ad anello, a palpebra e a griglia.*

Opal **DIFFUSER** made of UV-rays stabilized polymethylmethacrylate (PMMA), with silicone rubber gasket to ensure high protection against external agents.

***DIFFUSORE** opale realizzato in polimetilmetacrilato (PMMA) stabilizzato ai raggi UV. Completo di guarnizione in gomma siliconica per garantire un alto livello di protezione contro gli agenti esterni.*

BASE made of shockproof resin material, provided with E27 or GX53 lampholder. Available in different backlit colours to create a coloured effect on wall and ceilings.

***BASE** realizzata in resina antiurto. Fornita completa di portalampada E27 o GX53. Disponibile in diversi colori per creare una retroilluminazione colorata su pareti e soffitti.*



MADDI



Dimensions and weight
Width: 230 mm
Height: 330 mm
Depth: 90 mm
Weight: 1 Kg

Moulded colours:
Black *White* *Grey*

Diffuser PMMA:
Opal

GX53 LED



Bulkhead supplied **fully pre-wired** and complete with TÜV approved, long-life and efficient **GX53 LED lamp included.** Different wattage available.

- **COST SAVING:** long-life and efficient LED light sources
- **BUILT-IN DRIVER:** Quick and easy lamp replacement for a very simple maintenance after installation.

				*ADD. SUFFIX
GX53 LED	7 W	600 Lm	4000 K	.A1L
			3000 K	.A1R
	11 W	1300 Lm	4000 K	.B1L
			3000 K	.B1R
	18 W	2000 Lm	4000 K	.E1L
			3000 K	.E1R



7W 11W 18W = **60W 100W 150W** incandescent

SAVE 90%

E27



Bulkhead supplied **fully pre-wired** with **E27 lampholder**. White resin reflective plate designed to grant lampholder protection and isolation. Safe fixation of the electrical devices on the plate rear side.
Daylight and motion sensor available as an option. Sensor operating voltage: 220-240V (120V available on demand).

		*ADD. SUFFIX
E27 (CFL -LED)	max 160 mm	.E27
E27 + SENSOR (CFL -LED)		.ES7

POST VERSION



Maddi bulkhead range can be mounted on a pole with or without an angled bracket.

** ADD THESE SUFFIXES TO THE REFERENCES MENTIONED IN THE CATALOGUE*

LED LAMPS

More technical details about TÜV approved Fumagalli LED Lamps on page 512.

MADDI RANGE

OVAL





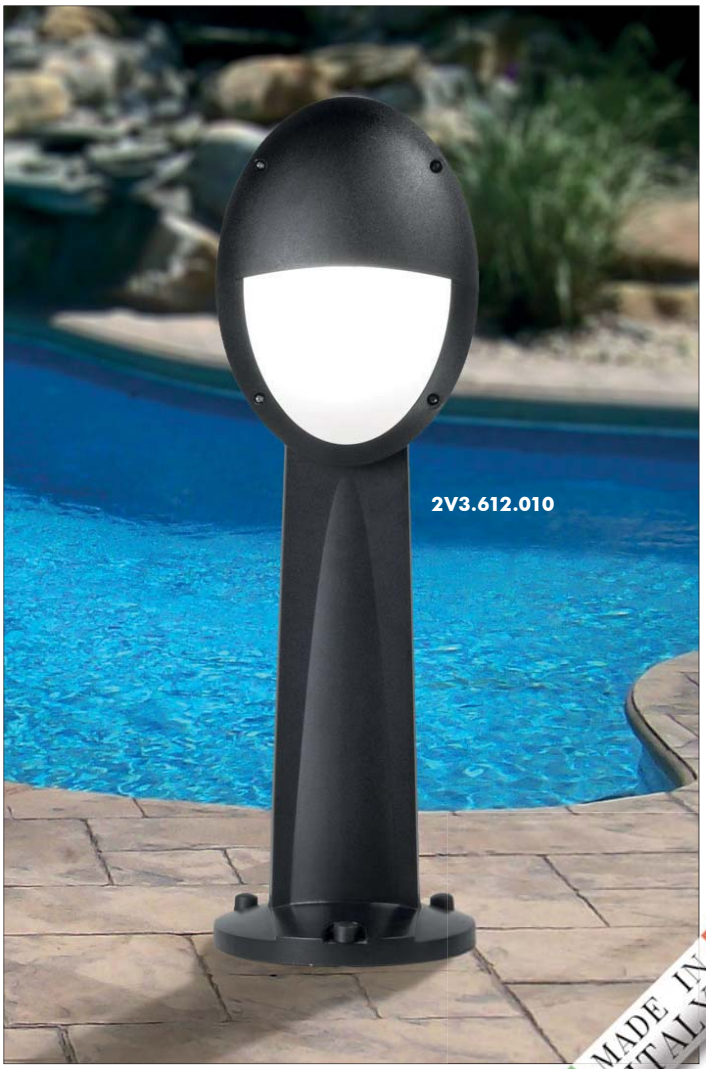



MADE IN ITALY

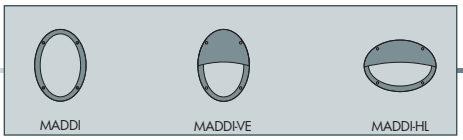

MADDI RANGE

OVAL

MADDI E27

1V3.000.E27

Pcs 16
Kg 15,5
mc 0,194

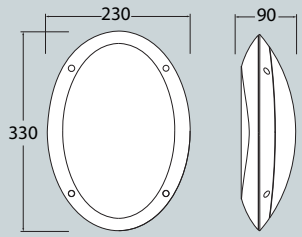

4000K *3000K*

MADDI GX53		
1V3.000.A1L	**7W**	1V3.000.A1R
1V3.000.B1L	**11W**	1V3.000.B1R
1V3.000.E1L	**18W**	1V3.000.E1R

GABRI/ MADDI 1L

1V3.613.010

Pcs 1
Kg 4
mc 0,097

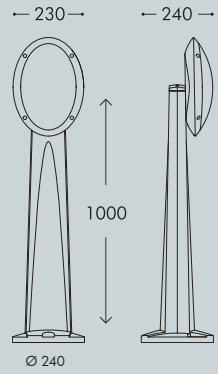

GABRI/ MADDI 2L

1V3.613.020

Pcs 1
Kg 5
mc 0,097

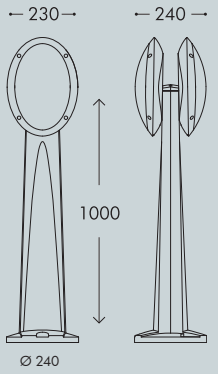

MINIGABRI/ MADDI 1L

1V3.612.010

Pcs 1
Kg 3,5
mc 0,065

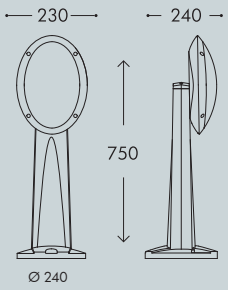

MINIGABRI/ MADDI 2L

1V3.612.020

Pcs 1
Kg 4,5
mc 0,065

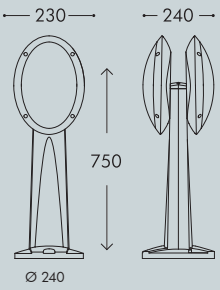

MADDI-VE E27

2V3.000.E27

Pcs 16
Kg 15,5
mc 0,194

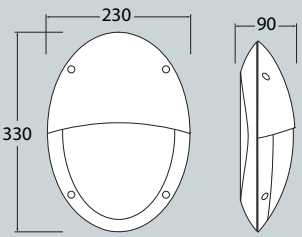

4000K *3000K*

MADDI-VE GX53		
2V3.000.A1L	**7W**	2V3.000.A1R
2V3.000.B1L	**11W**	2V3.000.B1R
2V3.000.E1L	**18W**	2V3.000.E1R

GABRI/ MADDI-VE 1L

2V3.613.010

Pcs 1
Kg 4
mc 0,097

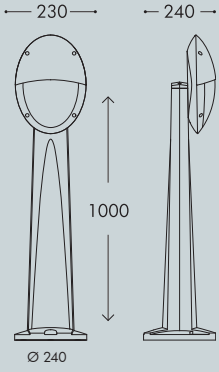

GABRI/ MADDI-VE 2L

2V3.613.020

Pcs 1
Kg 5
mc 0,097

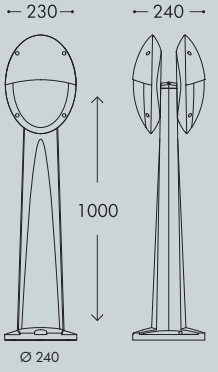

MINIGABRI/ MADDI-VE 1L

2V3.612.010

Pcs 1
Kg 3,5
mc 0,065

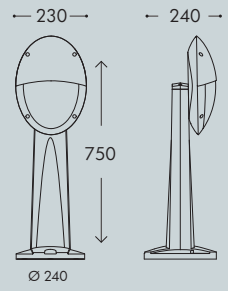

MINIGABRI/ MADDI-VE 2L

2V3.612.020

Pcs 1
Kg 4,5
mc 0,065

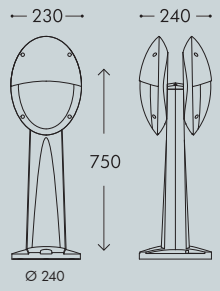

MADDI-HL E27

3V3.000.E27

Pcs 16
Kg 15,5
mc 0,194

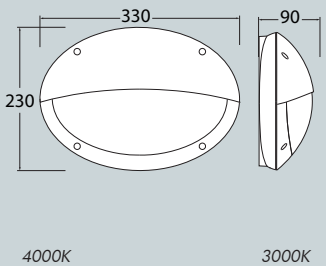

4000K *3000K*

MADDI-HL GX53		
3V3.000.A1L	**7W**	3V3.000.A1R
3V3.000.B1L	**11W**	3V3.000.B1R
3V3.000.E1L	**18W**	3V3.000.E1R

REMI/MADDI RANGE

OVAL









MADE IN ITALY

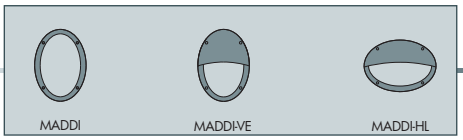

REMI/MADDI RANGE

OVAL

REMI/MADDI E27

1V3.602.E27

Pcs 16
Kg 18,7
mc 0,194

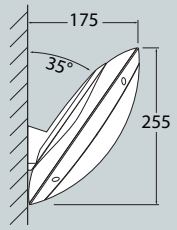

4000K 3000K

REMI/MADDI GX53		
1V3.602.A1L	**7W**	1V3.602.A1R
1V3.602.B1L	**11W**	1V3.602.B1R
1V3.602.E1L	**18W**	1V3.602.E1R

GABRI REMI/MADDI 1L

1V3.613.X10

Pcs 1
Kg 4,5
mc 0,097

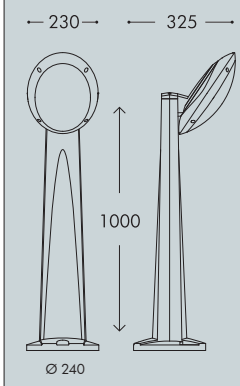

GABRI REMI/MADDI 2L

1V3.613.X20

Pcs 1
Kg 6
mc 0,097

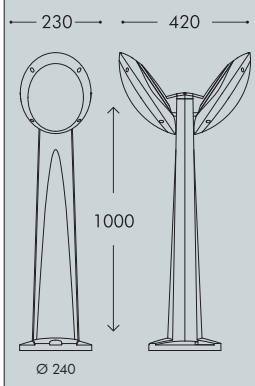

MINIGABRI REMI/MADDI 1L

1V3.612.X10

Pcs 1
Kg 3,5
mc 0,065

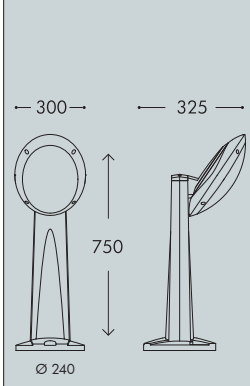

MINIGABRI REMI/MADDI 2L

1V3.612.X20

Pcs 1
Kg 5
mc 0,065

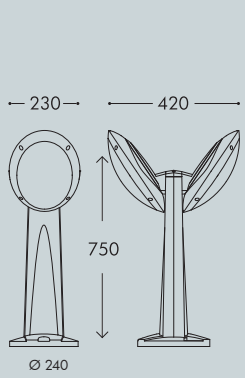

REMI/MADDI-VE E27

2V3.602.E27

Pcs 16
Kg 18,7
mc 0,194

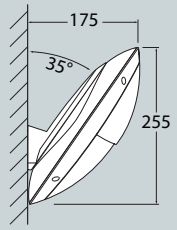

4000K 3000K

REMI/MADDI-VE GX53		
2V3.602.A1L	**7W**	2V3.602.A1R
2V3.602.B1L	**11W**	2V3.602.B1R
2V3.602.E1L	**18W**	2V3.602.E1R

GABRI REMI/MADDI-VE 1L

2V3.613.X10

Pcs 1
Kg 4,5
mc 0,097

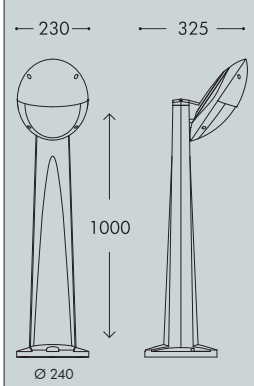

GABRI REMI/MADDI-VE 2L

2V3.613.X20

Pcs 1
Kg 6
mc 0,097

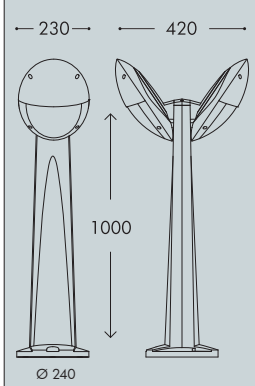

MINIGABRI REMI/MADDI-VE 1L

2V3.612.X10

Pcs 1
Kg 3,5
mc 0,065

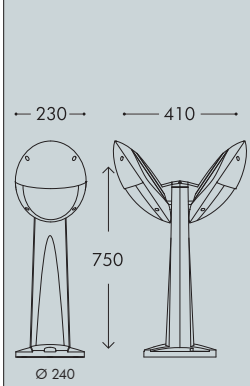

MINIGABRI REMI/MADDI-VE 2L

2V3.612.X20

Pcs 1
Kg 5
mc 0,065

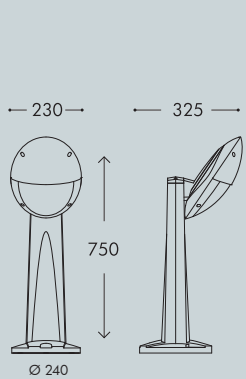

REMI/MADDI-HL E27

3V3.602.E27

Pcs 16
Kg 18,7
mc 0,194

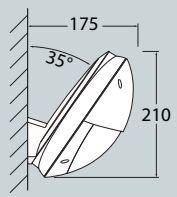

4000K 3000K

REMI/MADDI-HL GX53		
3V3.602.A1L	**7W**	3V3.602.A1R
3V3.602.B1L	**11W**	3V3.602.B1R
3V3.602.E1L	**18W**	3V3.602.E1R

GABRI REMI/MADDI-HL 1L

3V3.613.X10

Pcs 1
Kg 4,5
mc 0,097

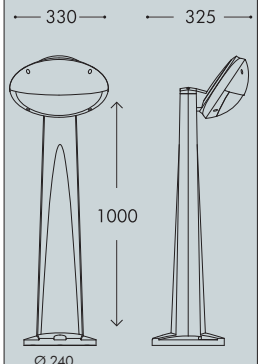

GABRI REMI/MADDI-HL 2L

3V3.613.X20

Pcs 1
Kg 6
mc 0,097

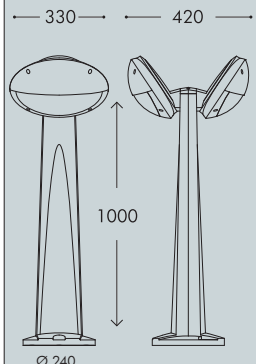

MINIGABRI REMI/MADDI-HL 1L

3V3.612.X10

Pcs 1
Kg 3,5
mc 0,065

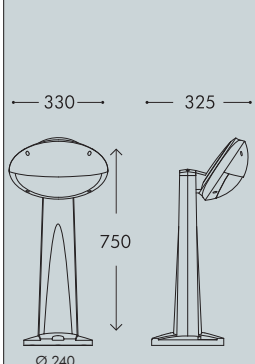

MINIGABRI REMI/MADDI-HL 2L

3V3.612.X20

Pcs 1
Kg 5
mc 0,065

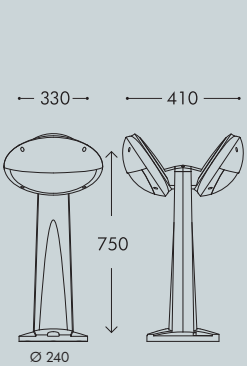





FLOODLIGHT

MINITOMMY

FLOODLIGHT

LED floodlight with single or double lights made of shockproof resin material, UV-rays stabilized, rust and corrosion-free. Suitable for indoor and outdoor installations on wall and ceilings, in the ground or on spikes. Ring or eyelid cover versions available with no visible screws. Supplied as standard with TÜV approved, long-life and efficient **GU10 LED lamp included**. The floodlight is fully adjustable and it can tilt and turn at will. Insulation class II, Protection rating IP66.

*Proiettore a LED a luce singola o doppia fabbricato in resina antiurto stabilizzata ai raggi UV inattaccabile da ruggine e corrosione. Idoneo per istallazioni a parete, a soffitto, al suolo o su picchetto, sia in ambienti esterni che interni. Cover ad anello o a palpebra senza viti a vista. Fornito nella versione standard con **inclusa lampadina a LED GU10** approvata TÜV di lunga durata ed elevata efficienza. Il proiettore è completamente regolabile e si può inclinare e orientare a piacimento. Classe di isolamento II, grado di protezione IP66.*



MINITOMMY
1M1.000



MINITOMMY-EL
1M2.000



MINITOMMY 2L
3M1.000



MINITOMMY-EL 2L
3M2.000

1M1.001.U1L

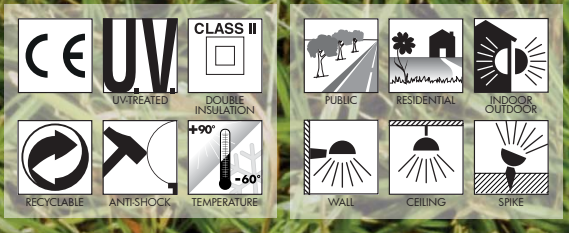

MINITOMMY - COMPONENTS

IP66



COVER with no visible screws made of shockproof resin material, UV-rays stabilized, rust and corrosion free. Ring or eyelid versions available.

COVER *senza viti a vista in resina antiurto stabilizzata ai raggi UV inattaccabile da ruggine e corrosione. Disponibile nella versione ad anello o a palpebra.*

DIFFUSER made of shockproof resin material (PC) complete with silicone rubber gasket to ensure high protection against external agents. Frosted or coloured versions, to get a customized ambiance.

DIFFUSORE *in resina antiurto (PC) completo di guarnizione in gomma siliconica per garantire un alto livello di protezione contro gli agenti esterni. Disponibile nella versione satinata o colorata, per ottenere un'ambientazione personalizzata.*



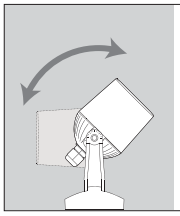

Resin **BODY** suitable for the electrical devices fixation and resin **SUPPORT FORK** to allow a fully adjustable floodlight position.

CORPO *in resina predisposto per il fissaggio degli accessori elettrici e* ***FORCELLA*** *di supporto per permettere l'orientamento del proiettore.*

INSTALLATION ELEMENTS:
- ROTATION DISK for surface installation.
- SPIKE for in ground installation.
- CONNECTION FITTING for double lights version.

ELEMENTI DI FISSAGGIO*:*
- DISCO DI ROTAZIONE per l'istallazione a parete.
- PICCHETTO per l'istallazione nel terreno.
- SUPPORTO per la versione a luce doppia.

MINITOMMY



Dimensions and weight
Height: 127 mm
Width: 122 mm
Weight: 0,45 Kg

Moulded Colours:
Black *Grey* *White*

Diffuser PC:
Frosted
Blue *Green* *Orange*

GU10 LED



			*ADD. SUFFIX
GU10 LED	3,5W	400 Lm	4000 K .U1L
			3000 K .U1R



3.5W 400 Lm = **50W** HALOGEN

SAVE 92%

Floodlight supplied as standard with TÜV approved, long-life and efficient **GU10 LED lamp included**. Quick and easy lamp replacement for a very simple maintenance after installation.

- **COST SAVING:** long-life and efficient LED light sources
- **BUILT-IN DRIVER:** quick and easy lamp replacement
- **GREAT FLEXIBILITY:** GU10 standard lamp holder
- **FUTURE-PROOFED LUMINARIES:** performances easy to upgrade to latest technology developments
- **SUITABLE FOR OUTDOOR USE:** built-in driver fully protected against heat and humidity by silicone paste.

LED LAMPS

More technical details about TÜV approved Fumagalli LED Lamps on page 512.

** ADD THESE SUFFIXES TO THE REFERENCES MENTIONED IN THE CATALOGUE*

MINITOMMY

FLOODLIGHT







MADE IN ITALY

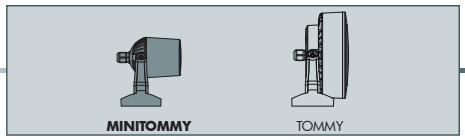

MINITOMMY

1M1.000.U1L	**3,5W**	1M1.000.U1R
4000K	GU10 LED LAMP INCLUDED	*3000K*

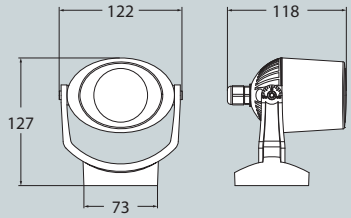

Pcs 30
Kg 12,6
mc 0,092

MINITOMMY SPIKE

1M1.001.U1L	**3,5W**	1M1.001.U1R
4000K	GU10 LED LAMP INCLUDED	*3000K*

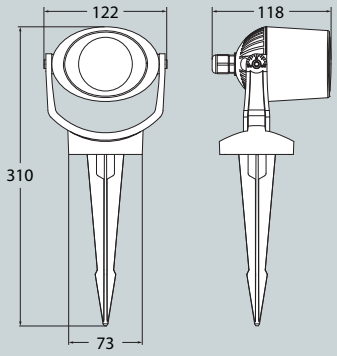

Pcs 30
Kg 13,8
mc 0,092

MINITOMMY 2L

3M1.000.U2L	**2x3,5W**	3M1.000.U2R
4000K	2 GU10 LED LAMPS INCLUDED	*3000K*

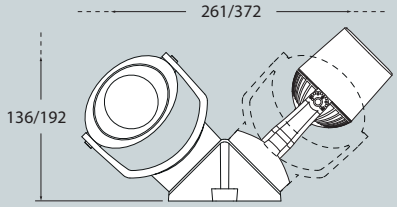

Pcs 18
Kg 16,2
mc 0,092

MINITOMMY 2L SPIKE

3M1.001.U2L	**2x3,5W**	3M1.001.U2R
4000K	2 GU10 LED LAMPS INCLUDED	*3000K*

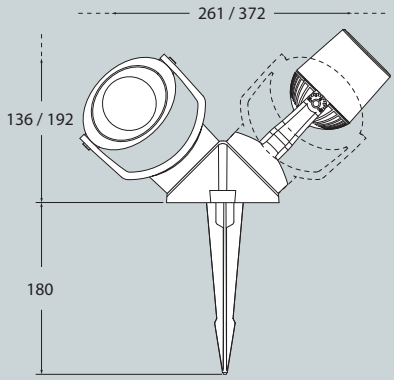

Pcs 18
Kg 17
mc 0,092

MINITOMMY-EL

FLOODLIGHT





MADE IN ITALY

MINITOMMY-EL

1M2.000.U1L	**3,5W**	1M2.000.U1R
4000K	GU10 LED LAMP INCLUDED	*3000K*

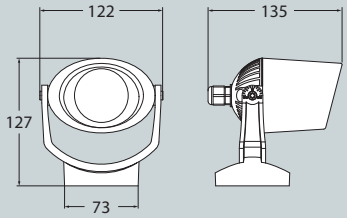

Pcs 30
Kg 12,6
mc 0,092

MINITOMMY-EL SPIKE

1M2.001.U1L	**3,5W**	1M2.001.U1R
4000K	GU10 LED LAMP INCLUDED	*3000K*

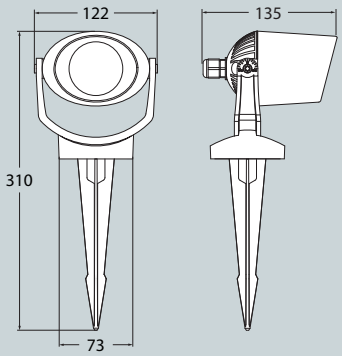

Pcs 30
Kg 13,8
mc 0,092

MINITOMMY-EL 2L

3M2.000.U2L	**2x3,5W**	3M2.000.U2R
4000K	2 GU10 LED LAMPS INCLUDED	*3000K*

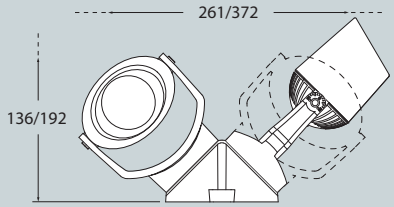

Pcs 18
Kg 16,2
mc 0,092

MINITOMMY-EL 2L SPIKE

3M2.001.U2L	**2x3,5W**	3M2.001.U2R
4000K	2 GU10 LED LAMPS INCLUDED	*3000K*

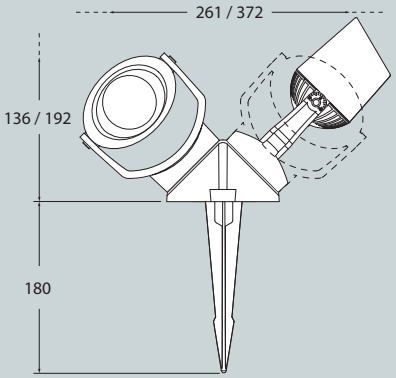

Pcs 18
Kg 17
mc 0,092

TOMMY

FLOODLIGHT

LED floodlight with single or double lights made of shockproof resin material, UV-rays stabilized, rust and corrosion-free. Suitable for indoor and outdoor installations on wall and ceilings, in the ground or on spikes. Square, ring or eyelid cover versions available with no visible screws. Supplied as standard with TÜV approved, long-life and efficient **GX53 LED lamp included**. The floodlight is fully adjustable and it can tilt and turn at will. Insulation class II, Protection rating IP66.

*Proiettore a LED a luce singola o doppia fabbricato in resina antiurto stabilizzata ai raggi UV, inattaccabile da ruggine e corrosione. Idoneo per istallazioni a parete, a soffitto, al suolo o su picchetto, sia in ambienti esterni che interni. Cover quadrata, ad anello o a palpebra senza viti a vista. Fornito con **inclusa lampadina a LED GX53** approvata TÜV di lunga durata ed elevata efficienza. Il proiettore è completamente regolabile e si può inclinare e orientare a piacimento. Classe di isolamento II, grado di protezione IP66.*


TOMMY
2M1.000


TOMMY-EL
2M2.000


TOMMY-SQ
5M1.000


TOMMY 2L
4M1.000


TOMMY-EL 2L
4M2.000


TOMMY-SQ 2L
6M1.000

2M1.001.D1L

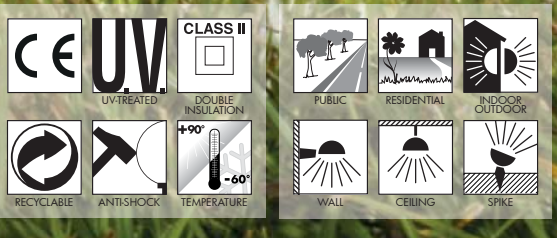

TOMMY - COMPONENTS

IP66



ROTATION DISK



SPIKE



CONNECTION FITTING



COVER with no visible screws made of shockproof resin material, UV-rays stabilized, rust and corrosion free. Ring or eyelid versions available.

COVER *senza viti a vista in resina antiurto stabilizzata ai raggi UV inattaccabile da ruggine e corrosione. Disponibile nella versione ad anello o a palpebra.*

DIFFUSER made of shockproof resin material (PC) complete with silicone rubber gasket to ensure high protection against external agents. Frosted or coloured versions, to get a customized ambiance.

DIFFUSORE *in resina antiurto (PC) completo di guarnizione in gomma siliconica per garantire un alto livello di protezione contro gli agenti esterni. Disponibile nella versione satinata o colorata, per ottenere un'ambientazione personalizzata.*

Frosted (X) | Green (N) | Orange (R) | Blue (U)



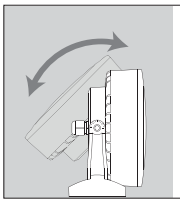

Resin **BODY** suitable for the electrical devices fixation and resin **SUPPORT FORK** to allow a fully adjustable floodlight position.

CORPO *in resina predisposto per il fissaggio degli accessori elettrici e* ***FORCELLA*** *di supporto per permettere l'orientamento del proiettore.*

INSTALLATION ELEMENTS:
- ROTATION DISK for surface installation.
- SPIKE for in ground installation.
- CONNECTION FITTING for double lights version.

ELEMENTI DI FISSAGGIO*:*
- DISCO DI ROTAZIONE per l'istallazione a parete.
- PICCHETTO per l'istallazione nel terreno.
- SUPPORTO per la versione a luce doppia.

TOMMY



Dimensions and weight
Height:165 mm
Width: 152 mm
Weight: 0,8 Kg

Moulded Colours:
Black *Grey* *White*

Diffuser PC:
Frosted
Blue *Green* *Orange*

GX53 LED



				*ADD. SUFFIX
GX53 LED	3 W	350 Lm	4000 K	.G1L
			3000 K	.G1R
GX53 LED	7 W	800 Lm	4000 K	.C1L
			3000 K	.C1R
	10 W	1200 Lm	4000 K	.D1L
			3000 K	.D1R

Floodlight supplied as standard with TÜV approved, long-life and efficient **GX53 LED lamp included**. Different wattages available. Quick and easy lamp replacement for a very simple maintenance after installation.

- **COST SAVING:** long-life and efficient LED light sources
- **BUILT-IN DRIVER:** quick and easy lamp replacement
- **GREAT FLEXIBILITY:** GX53 standard lamp holder
- **FUTURE-PROOFED LUMINARIES:** performances easy to upgrade to latest technology developments
- **SUITABLE FOR OUTDOOR USE:** built-in driver fully protected against heat and humidity by silicone paste.



3W 350 Lm = **40W** incandescent

SAVE 93%



7W 10W = **75W 100W** incandescent

SAVE 90%

LED LAMPS

More technical details about TÜV approved Fumagalli LED Lamps on page 512.

** ADD THESE SUFFIXES TO THE REFERENCES MENTIONED IN THE CATALOGUE*

TOMMY

FLOODLIGHT





MADE IN ITALY

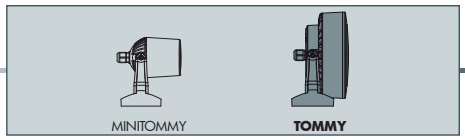

TOMMY
FLOODLIGHT

TOMMY		
2M1.000.G1L	**3W**	2M1.000.G1R
2M1.000.C1L	**7W**	2M1.000.C1R
2M1.000.D1L	**10W**	2M1.000.D1R
4000K	GX53 LED LAMP INCLUDED	*3000K*

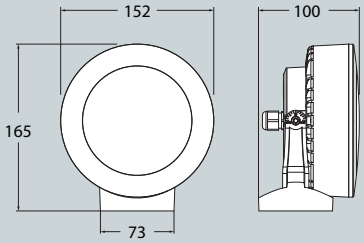

Pcs 18
Kg 15,3
mc 0,092

TOMMY SPIKE		
2M1.001.G1L	**3W**	2M1.001.G1R
2M1.001.C1L	**7W**	2M1.001.C1R
2M1.001.D1L	**10W**	2M1.001.D1R
4000K	GX53 LED LAMP INCLUDED	*3000K*

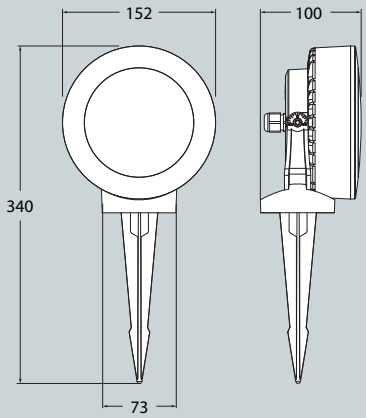

Pcs 18
Kg 16
mc 0,092

TOMMY 2L		
4M1.000.G2L	**2x3W**	4M1.000.G2R
4M1.000.C2L	**2x7W**	4M1.000.C2R
4M1.000.D2L	**2x10W**	4M1.000.D2R
4000K	2 GX53 LED LAMPS INCLUDED	*3000K*

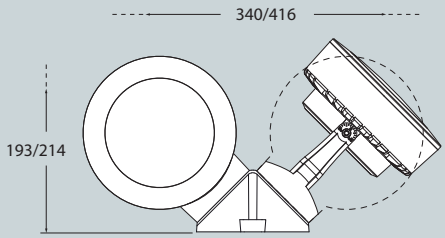

Pcs 8
Kg 13,9
mc 0,092

TOMMY 2L SPIKE		
4M1.001.G2L	**2x3W**	4M1.001.G2R
4M1.001.C2L	**2x7W**	4M1.001.C2R
4M1.001.D2L	**2x10W**	4M1.001.D2R
4000K	2 GX53 LED LAMPS INCLUDED	*3000K*

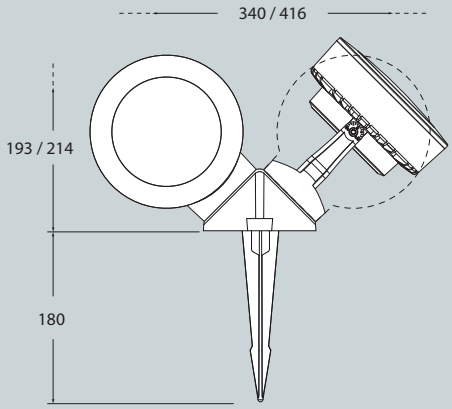

Pcs 8
Kg 14,2
mc 0,092

TOMMY-EL

FLOODLIGHT





MADE IN ITALY

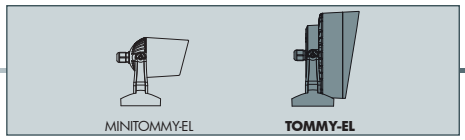

TOMMY-EL

FLOODLIGHT

TOMMY-EL		
2M2.000.G1L	**3W**	2M2.000.G1R
2M2.000.C1L	**7W**	2M2.000.C1R
2M2.000.D1L	**10W**	2M2.000.D1R
4000K	GX53 LED LAMP INCLUDED	*3000K*

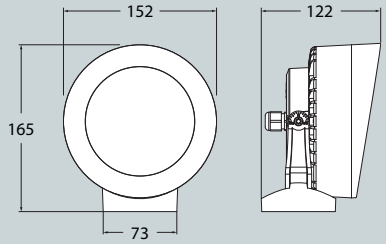

Pcs 18
Kg 15,3
mc 0,092

TOMMY-EL SPIKE		
2M2.001.G1L	**3W**	2M2.001.G1R
2M2.001.C1L	**7W**	2M2.001.C1R
2M2.001.D1L	**10W**	2M2.001.D1R
4000K	GX53 LED LAMP INCLUDED	*3000K*

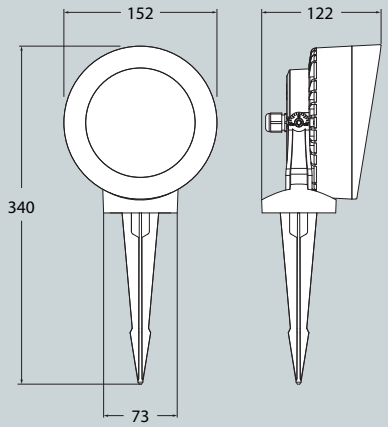

Pcs 18
Kg 16
mc 0,092

TOMMY-EL 2L		
4M2.000.G2L	**2x3W**	4M2.000.G2R
4M2.000.C2L	**2x7W**	4M2.000.C2R
4M2.000.D2L	**2x10W**	4M2.000.D2R
4000K	2 GX53 LED LAMPS INCLUDED	*3000K*

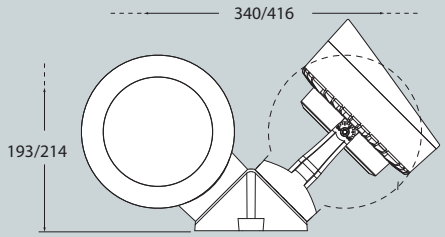

Pcs 8
Kg 13,9
mc 0,092

TOMMY-EL 2L SPIKE		
4M2.001.G2L	**2x3W**	4M2.001.G2R
4M2.001.C2L	**2x7W**	4M2.001.C2R
4M2.001.D2L	**2x10W**	4M2.001.D2R
4000K	2 GX53 LED LAMPS INCLUDED	*3000K*

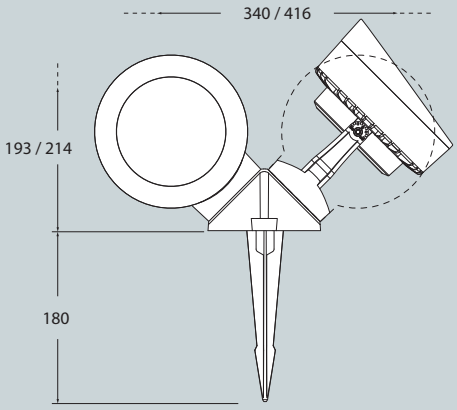

Pcs 8
Kg 14,2
mc 0,092

TOMMY-SQ

FLOODLIGHT





MADE IN ITALY

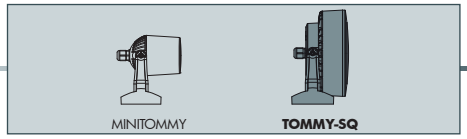

TOMMY-SQ

FLOODLIGHT

TOMMY-SQ		
5M1.000.G1L	**3W**	5M1.000.G1R
5M1.000.C1L	**7W**	5M1.000.C1R
5M1.000.D1L	**10W**	5M1.000.D1R

4000K GX53 LED LAMP INCLUDED *3000K*

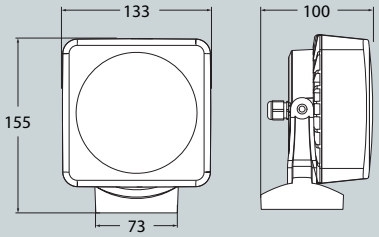

Pcs 18
Kg 15,3
mc 0,092

TOMMY-SQ SPIKE		
5M1.001.G1L	**3W**	5M1.001.G1R
5M1.001.C1L	**7W**	5M1.001.C1R
5M1.001.D1L	**10W**	5M1.001.D1R

4000K GX53 LED LAMP INCLUDED *3000K*

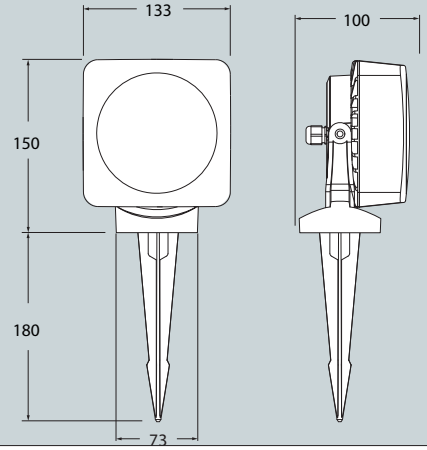

Pcs 18
Kg 16
mc 0,092

TOMMY-SQ 2L		
6M1.000.G2L	**2x3W**	6M1.000.G2R
6M1.000.C2L	**2x7W**	6M1.000.C2R
6M1.000.D2L	**2x10W**	6M1.000.D2R

4000K 2 GX53 LED LAMPS INCLUDED *3000K*

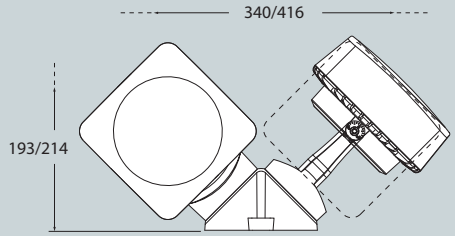

Pcs 8
Kg 13,9
mc 0,092

TOMMY-SQ 2L SPIKE		
6M1.001.G2L	**2x3W**	6M1.001.G2R
6M1.001.C2L	**2x7W**	6M1.001.C2R
6M1.001.D2L	**2x10W**	6M1.001.D2R

4000K 2 GX53 LED LAMPS INCLUDED *3000K*

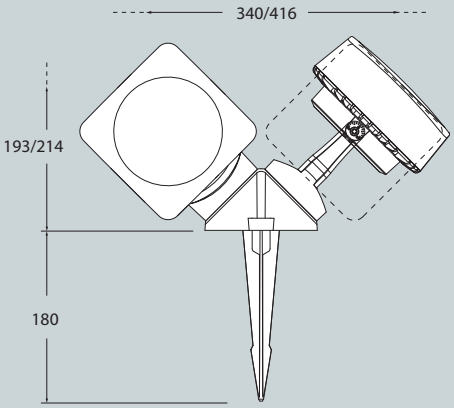

Pcs 8
Kg 14,2
mc 0,092

GIOVA/GERMANA

FLOODLIGHT

Rectangular floodlight with no visible screws made in shockproof resin material, UV-rays stabilized, rust and corrosion-free. Suitable for wall and ground installation. Provided complete with a fully adjustable bracket to direct the light emission. Supplied with TÜV approved, long-life and efficient **GX53 LED lamps included** or provided with **E27** lampholder. Motion sensor version available. Insulation class II, Protection rating IP66.

*Proiettore rettangolare senza viti a vista, fabbricato in resina antiurto stabilizzata ai raggi UV, inattaccabile da ruggine e corrosione. Idoneo per istallazioni a parete e al suolo. Fornito completo di braccio che permette l'orientamento del proiettore in qualsiasi posizione. Provvisto di **lampadine a LED GX53** approvate TÜV di lunga durata ed elevata efficienza o disponibile nella versione **E27**. Disponibile anche con sensore di movimento. Classe di isolamento II, grado di protezione IP66.*



GIOVA/GERMANA
2N1.702



2N1.702.C2L

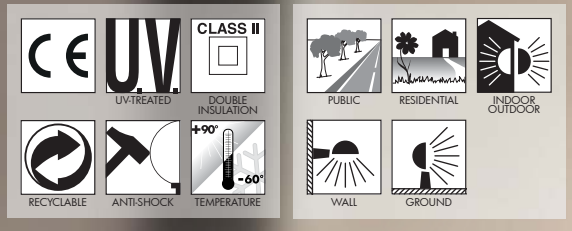

MADE IN ITALY

GIOVA/GERMANA - COMPONENTS

IP66



COVER with no visible screws, made of shockproof resin material, UV-rays stabilized.

COVER *senza viti a vista in resina antiurto stabilizzata ai raggi UV.*

DIFFUSER made of UV-rays stabilized polymethylmethacrylate (PMMA) screwed to the floodlight body.

DIFFUSORE *realizzato in polimetilmetacrilato (PMMA) stabilizzato ai raggi UV da avvitare al corpo del proiettore.*

BODY made of shockproof resin material, UV-rays stabilized, provided with silicone rubber gasket to ensure high protection against external agents.

CORPO *realizzato in resina antiurto, stabilizzata ai raggi UV, completa di guarnizione in gomma siliconica per garantire un alto livello di protezione contro gli agenti esterni.*

BRACKET made of shockproof resin material, UV-rays stabilized, to allow a fully adjustable position of the floodlight.

BRACCIO *realizzato in resina antiurto, stabilizzato ai raggi UV, che permette l'orientamento in qualsiasi posizione del proiettore*

GIOVA/GERMANA



Dimensions and weight
Height:280 mm
Width: 180 mm
Weight: 1,6 Kg

Moulded Colours:
Black *Grey* *White*

Diffuser PMMA:
Opal

2x GX53 LED



Floodlight supplied **fully pre-wired** complete with TÜV approved, long-life and efficient **2x GX53 LED lamps included**. Different wattages available. Quick and easy lamp replacement for a very simple maintenance after installation.

				*ADD. SUFFIX
GX53 LED	2x 3W **6W**	**700 Lm**	4000 K	.G2L
			3000 K	.G2R
GX53 LED	2x 7W **14W**	**1600 Lm**	4000 K	.C2L
			3000 K	.C2R
	2x 10W **20W**	**2400 Lm**	4000 K	.D2L
			3000 K	.D2R



2x 10W = **50W**
2.400 Lm SON-HQI

SAVE 60%

E27



Floodlight supplied **fully pre-wired** with white resin reflective ceiling designed to grant lampholder protection and isolation. Safe fixation of the electrical devices on the plate rear side.
Daylight and motion sensor available as an option. Sensor operating voltage: 220-240V (120V available on demand).

		*ADD. SUFFIX
E27 (CFL -LED)	max 160 mm	.P27
E27 + Sensor (CFL -LED)	max 160 mm	.PS7

LED LAMPS

More technical details about TÜV approved Fumagalli LED Lamps on page 512.

** ADD THESE SUFFIXES TO THE REFERENCES MENTIONED IN THE CATALOGUE*

GIOVA/GERMANA

FLOODLIGHT





MADE IN ITALY

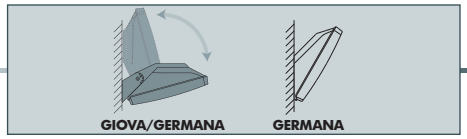

GIOVA/GERMANA

FLOODLIGHT

GIOVA/GERMANA GX53		
2N1.702.G2L	**6W**	2N1.702.G2R
2N1.702.C2L	**14W**	2N1.702.C2R
2N1.702.D2L	**20W**	2N1.702.D2R
4000K	2 GX53 LED LAMPS INCLUDED	*3000K*

Pcs 18
Kg 29,8
mc 0,198

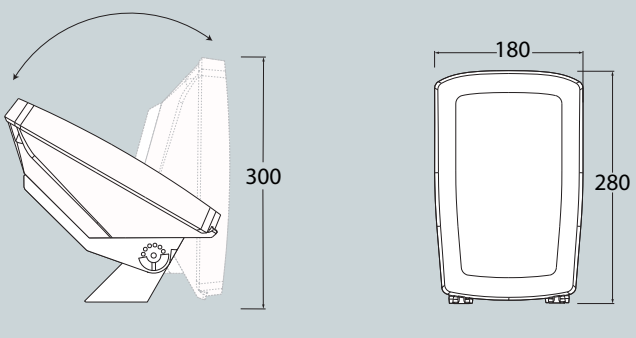

GIOVA/GERMANA E27	
E27 lampholder	2N1.702.P27
E27 with sensor	2N1.702.PS7

Pcs 18
Kg 21,7
mc 0,198

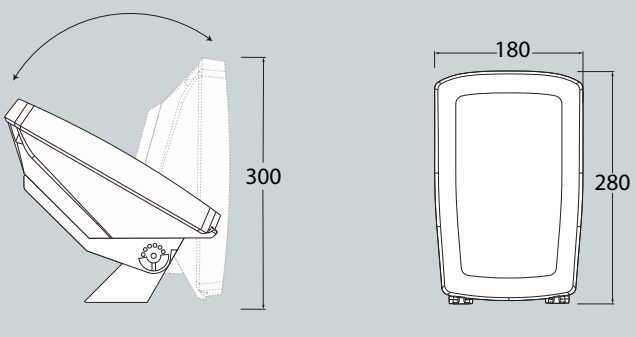

GERMANA

FLOODLIGHT

Rectangular floodlight with no visible screws made in shockproof resin material, UV-rays stabilized, rust and corrosion-free. Suitable for wall and post installation. Supplied with TÜV approved, long-life and efficient **GX53 LED lamps included** or provided with **E27** lampholder. Motion sensor version available. Insulation class II, Protection rating IP66.

*Proiettore rettangolare senza viti a vista, fabbricato in resina antiurto stabilizzata ai raggi UV, inattaccabile da ruggine e corrosione. Idoneo per istallazioni a parete e a palo. Provvisto di **lampadine a LED GX53** approvate TÜV di lunga durata ed elevata efficienza o fornito nella versione **E27**. Disponibile anche con sensore di movimento. Classe di isolamento II, grado di protezione IP66.*

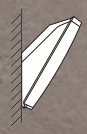

GERMANA
2N1.000



2N1.000.C2L

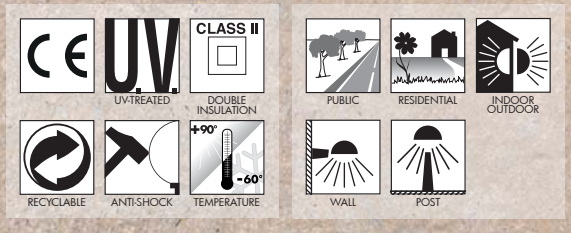

GERMANA - COMPONENTS

IP66



COVER with no visible screws, made of shockproof resin material, UV-rays stabilized.

COVER*senza viti a vista in resina antiurto stabilizzata ai raggi UV.*

DIFFUSER made of UV-rays stabilized polymethyl-methacrylate (PMMA) screwed to the floodlight body.

DIFFUSORE *realizzato in polimetilmetacrilato (PMMA) stabilizzato ai raggi UV da avvitare al corpo del proiettore.*

BODY made of shockproof resin material, UV-rays stabilized, provided with silicone rubber gasket to ensure high protection against external agents.

CORPO *realizzato in resina antiurto, stabilizzata ai raggi UV, completa di guarnizione in gomma siliconica per garantire un alto livello di protezione contro gli agenti esterni.*

GERMANA



Dimensions and weight
Height:280 mm
Width: 180 mm
Weight: 1,4 Kg

Moulded Colours:
Black *Grey* *White*

Diffuser PMMA:
Opal

2x GX53 LED



Floodlight supplied **fully pre-wired** complete with TÜV approved, long-life and efficient **2x GX53 LED lamps included**. Different wattages available. Quick and easy lamp replacement for a very simple maintenance after installation.

				*ADD. SUFFIX
GX53 LED	2x 3W **6W**	**700 Lm**	4000 K	.G2L
			3000 K	.G2R
GX53 LED	2x 7W **14W**	**1600 Lm**	4000 K	.C2L
			3000 K	.C2R
	2x 10W **20W**	**2400 Lm**	4000 K	.D2L
			3000 K	.D2R



2x 10W **2.400 Lm** = **50W** SON-HQI

SAVE 60%

E27



Floodlight supplied **fully pre-wired** with white resin reflective ceiling designed to grant lampholder protection and isolation. Safe fixation of the electrical devices on the plate rear side.
Daylight and motion sensor available as an option. Sensor operating voltage: 220-240V (120V available on demand).

		*ADD. SUFFIX
E27 (CFL -LED)	max 160 mm	.P27
E27 + Sensor (CFL -LED)	max 160 mm	.PS7

POST VERSION



Detailed information on next page.

** ADD THESE SUFFIXES TO THE REFERENCES MENTIONED IN THE CATALOGUE*

LED LAMPS

More technical details about TÜV approved Fumagalli LED Lamps on page 512.

GERMANA

FLOODLIGHT



2N1.000.D2L



2N1.613.020.D2L



2N1.612.010.D2L

MADE IN ITALY

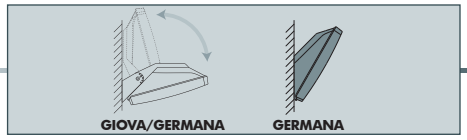

GERMANA
FLOODLIGHT

GERMANA GX53		
2N1.000.G2L	**6W**	2N1.000.G2R
2N1.000.C2L	**14W**	2N1.000.C2R
2N1.000.D2L	**20W**	2N1.000.D2R

4000K 2 GX53 LED LAMPS INCLUDED *3000K*

Pcs 18
Kg 26,2
mc 0,198

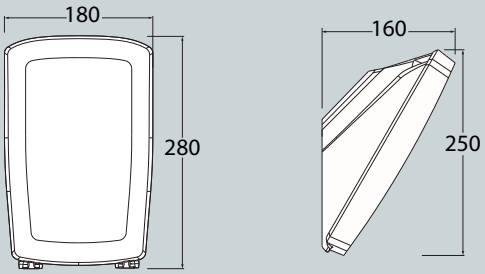

GERMANA E27	
E27 lampholder	2N1.000.P27
E27 with sensor	2N1.000.PS7

Pcs 18
Kg 18,1
mc 0,198

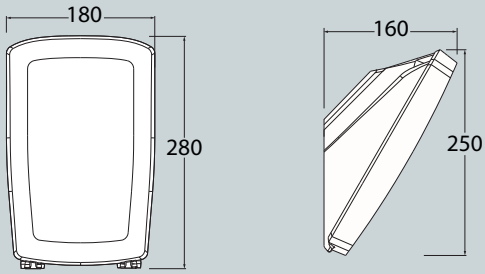

MINIPINELA 1L		
2N1.612.010.G2L	**6W**	2N1.612.010.G2R
2N1.612.010.C2L	**14W**	2N1.612.010.C2R
2N1.612.010.D2L	**20W**	2N1.612.010.D2R

4000K 2 GX53 LED LAMPS INCLUDED *3000K*

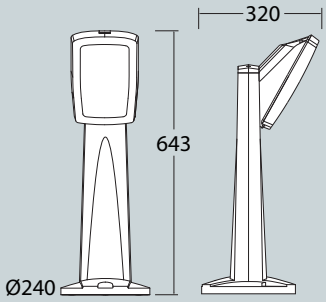

Pcs 1
Kg 3,5
mc 0,06

E27 lampholder	2N1.612.010.P27
E27 with sensor	2N1.612.010.PS7

MINIPINELA 2L		
2N1.612.020.G2L	**2x6W**	2N1.612.020.G2R
2N1.612.020.C2L	**2x14W**	2N1.612.020.C2R
2N1.612.020.D2L	**2x20W**	2N1.612.020.D2R

4000K 2 GX53 LED LAMPS INCLUDED *3000K*

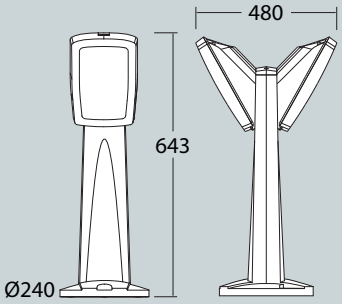

Pcs 1
Kg 4
mc 0,06

E27 lampholder	2N1.612.020.P27
E27 with sensor	2N1.612.020.PS7

PINELA 1L		
2N1.613.010.C2L	**6W**	2N1.613.010.G2R
2N1.613.010.D2L	**14W**	2N1.613.010.C2R
2N1.613.010.D2L	**20W**	2N1.613.010.D2R

4000K 2 GX53 LED LAMPS INCLUDED *3000K*

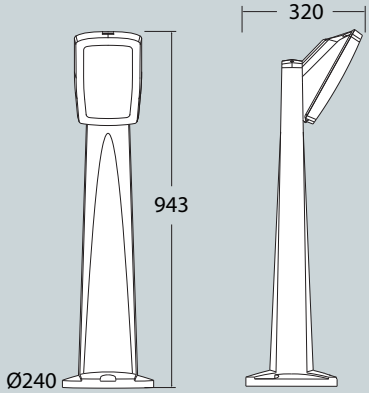

Pcs 1
Kg 4
mc 0,097

E27 lampholder	2N1.613.010.P27
E27 with sensor	2N1.613.010.PS7

PINELA 2L		
2N1.613.020.C2L	**2x6W**	2N1.613.020.G2R
2N1.613.020.D2L	**2x14W**	2N1.613.020.C2R
2N1.613.020.D2L	**2x20W**	2N1.613.020.D2R

4000K 2 GX53 LED LAMPS INCLUDED *3000K*

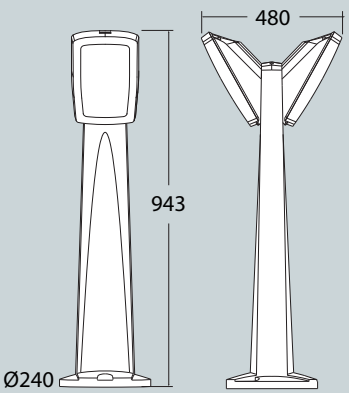

Pcs 1
Kg 5
mc 0,097

E27 lampholder	2N1.613.020.P27
E27 with sensor	2N1.613.020.PS7

GIOVA/GIUSEPPE

FLOODLIGHT

Square floodlight with no visible screws made in shockproof resin material, UV-rays stabilized, rust and corrosion-free. Suitable for wall, ground and post installation. Provided complete with a fully adjustable bracket to direct the light emission. Supplied with TÜV approved, long-life and efficient **GX53 LED lamps included** or provided with **2x E27** lampholders. Motion sensor version available. Insulation class II, Protection rating IP66.

*Proiettore quadro senza viti a vista, fabbricato in resina antiurto stabilizzata ai raggi UV, inattaccabile da ruggine e corrosione. Idoneo per istallazioni a parete,a suolo e a palo. Provvisto completo di braccio che permette l'orientamento del proiettore in qualsiasi posizione. Fornito con **incluse lampadine a LED GX53** approvate TÜV di lunga durata ed elevata efficienza o disponibile nella versione **2x E27**. Disponibile anche con sensore di movimento. Classe di isolamento II, grado di protezione IP66.*

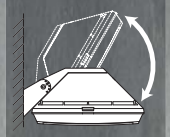

GIOVA/GIUSEPPE
4P1.702
4P2.702

4P1.702.B1L



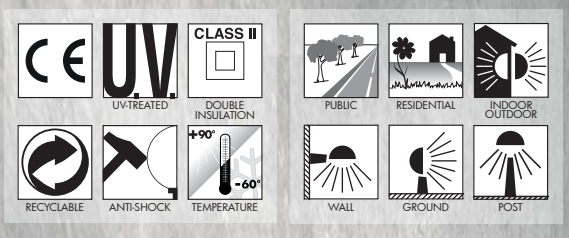

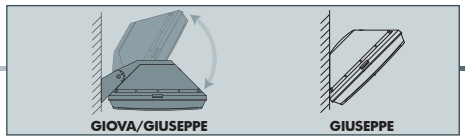

GIOVA/GIUSEPPE - COMPONENTS

IP66



COVER with no visible screws, made of shockproof resin material, UV-rays stabilized.

COVER *senza viti a vista in resina antiurto stabilizzata ai raggi UV.*

DIFFUSER made of UV-rays stabilized polymethyl-methacrylate (PMMA) screwed to the floodlight body.

DIFFUSORE *realizzato in polimetilmetacrilato (PMMA) stabilizzato ai raggi UV da avvitare al corpo del proiettore.*

BODY made of shockproof resin material, UV-rays stabilized, provided with silicone rubber gasket to ensure high protection against external agents.

CORPO *realizzato in resina antiurto, stabilizzata ai raggi UV, completa di guarnizione in gomma siliconica per garantire un alto livello di protezione contro gli agenti esterni.*

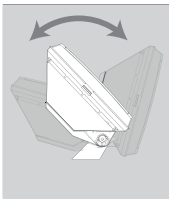

BRACKET made of shockproof resin material, UV-rays stabilized, to allow a fully adjustable position of the floodlight.

BRACCIO *realizzato in resina antiurto, stabilizzato ai raggi UV, che permette l'orientamento in qualsiasi posizione del proiettore.*

GIOVA/GIUSEPPE

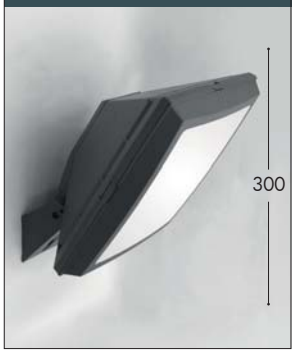

Dimensions and weight
Height:150 mm
Width: 300 mm
Weight: 3 Kg

Moulded Colours:
Black Grey White

Diffuser PMMA:
Opal

LED LAMPS

More technical details about TÜV approved Fumagalli LED Lamps on page 512.

4x GX53 LED



4P2.702

Floodlight supplied **with white resin reflective ceiling fully pre-wired** and complete with TÜV approved long-life and efficient **4x GX53 LED lamps included**. Different wattages available. Quick and easy lamp replacement for a very simple maintenance after installation.

				*ADD. SUFFIX
GX53 LED	4x 7W **28W**	**3200 Lm**	4000 K	.C4L
			3000 K	.C4R
	4x 10W **40W**	**4800 Lm**	4000 K	.D4L
			3000 K	.D4R

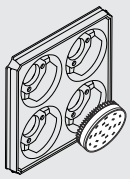

4x 10W 4800 Lm = **100W** SON-HQI

SAVE 60%

GX53 LED



4P1.702

Floodlight supplied **fully pre-wired** and complete with TÜV approved, long-life and efficient **GX53 LED lamp** in different wattages.

			*ADD. SUFFIX
GX53 LED	**7 W**	**600 Lm**	4000 K .A1L / 3000 K .A1R
	11 W	**1300 Lm**	4000 K .B1L / 3000 K .B1R
	18 W	**2000 Lm**	4000 K .E1L / 3000 K .E1R
	7 W + SENSOR	**600 Lm**	4000 K .ASL / 3000 K .ASR
GX53 LED	**11 W** + SENSOR	**1300 Lm**	4000 K .BSL / 3000 K .BSR
	18 W + SENSOR	**2000 Lm**	4000 K .ESL / 3000 K .ESR



7W 11W 18W = **60W 100W 150W** incandescent

SAVE 90%

2x E27



4P2.702

Floodlight supplied **fully pre-wired** with white resin reflective ceiling and complete with **2x E27 lampholders**.
Daylight and motion sensor available as option. Sensor operating voltage: 220-240V. (120V version available on demand).

		*ADD. SUFFIX
2x E27 (CFL -LED)	max 160 mm	.E28
2x E27 + SENSOR	max 160 mm	.ES8

POST SYSTEM VERSION



Detailed information on page 376.

** ADD THESE SUFFIXES TO THE REFERENCES MENTIONED IN THE CATALOGUE*

GIOVA/GIUSEPPE

FLOODLIGHT





MADE IN ITALY

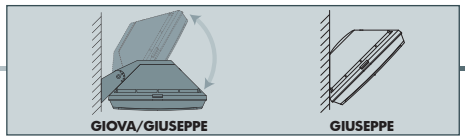

GIOVA/GIUSEPPE

FLOODLIGHT

GIOVA/GIUSEPPE GX53		
4P1.702.A1L	**7W**	4P1.702.A1R
4P1.702.B1L	**11W**	4P1.702.B1R
4P1.702.E1L	**18W**	4P1.702.E1R
4P2.702.C4L	**28W**	4P2.702.C4R
4P2.702.D4L	**40W**	4P2.702.D4R
4000K	GX53 LED LAMP INCLUDED	*3000K*

Pcs 10
Kg 31
mc 0,195

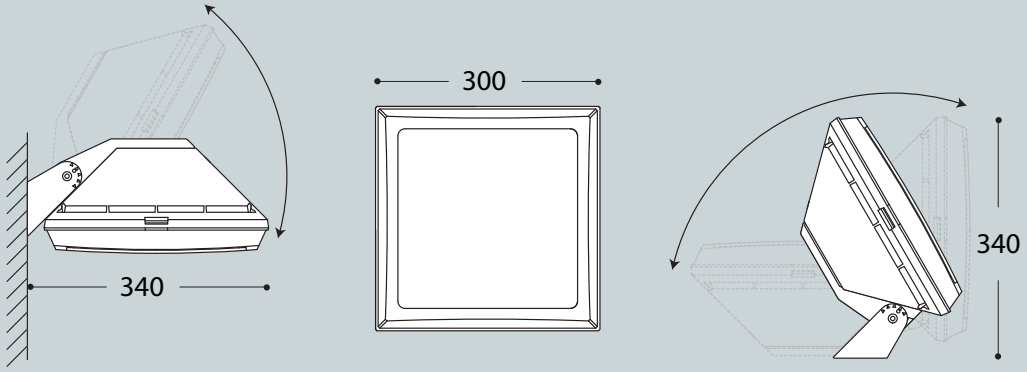

GIOVA/GIUSEPPE 2xE27	
2xE27 lampholder	4P2.702.E28
2xE27 with sensor	4P2.702.ES8

Pcs 10
Kg 21
mc 0,195

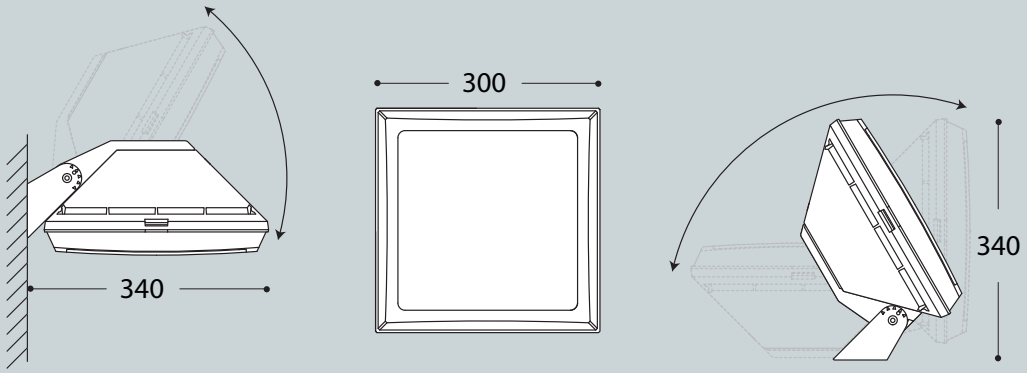

POST SYSTEM VERSION



Detailed information on page 376.

GIUSEPPE

FLOODLIGHT

Square floodlight with no visible screws made in shockproof resin material, UV rays stabilized, rust and corrosion-free. Suitable for wall, ceiling and post installation. Supplied with TÜV approved, long-life and efficient **GX53 LED lamps included** or provided with **2x E27** lampholders. Motion sensor version available. Insulation class II, Protection rating IP66.

*Proiettore quadro senza viti a vista, fabbricato in resina antiurto stabilizzata ai raggi UV, inattaccabile da ruggine e corrosione. Idoneo per istallazioni a parete, a soffitto e a palo. Fornito con **incluse lampadine a LED GX53** approvate TÜV di lunga durata ed elevata efficienza o disponibile nella versione **2x E27**. Disponibile anche con sensore di movimento. Classe di isolamento II, grado di protezione IP66.*



GIUSEPPE
4P1.000
4P2.000

4P2.000.D4L

MADE IN ITALY

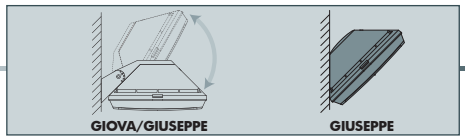

GIUSEPPE - COMPONENTS

IP66



COVER with no visible screws, made of shockproof resin material, UV-rays stabilized.

COVER *senza viti a vista in resina antiurto stabilizzata ai raggi UV.*

DIFFUSER made of UV-rays stabilized polymethyl-methacrylate (PMMA) screwed to the floodlight body.

DIFFUSORE *realizzato in polimetilmetacrilato (PMMA) stabilizzato ai raggi UV da avvitare al corpo del proiettore.*

BODY made of shockproof resin material, UV-rays stabilized, provided with silicone rubber gasket to ensure high protection against external agents.

CORPO *realizzato in resina antiurto, stabilizzata ai raggi UV, completa di guarnizione in gomma siliconica per garantire un alto livello di protezione contro gli agenti esterni.*

GIUSEPPE



Dimensions and weight
Height:150 mm
Width: 300 mm
Weight: 2,8 Kg

Moulded Colours:
Black *Grey* *White*

Diffuser PMMA:
Opal

LED LAMPS

More technical details about TÜV approved Fumagalli LED Lamps on page 512.

4x GX53 LED



4P2.000

Floodlight supplied **with white resin reflective ceiling fully pre-wired** and complete with TÜV approved long-life and efficient **4x GX53 LED lamps included**. Different wattages available. Quick and easy lamp replacement for a very simple maintenance after installation.

				*ADD. SUFFIX
GX53 LED	4x 7W **28W**	**3200 Lm**	4000 K	.C4L
			3000 K	.C4R
	4x 10W **40W**	**4800 Lm**	4000 K	.D4L
			3000 K	.D4R

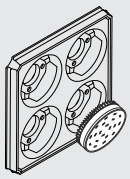

4x 10W 4800 Lm = **100W** SON-HQI

SAVE 60%

GX53 LED



4P1.000

Floodlight supplied **fully pre-wired** and complete with TÜV approved, long-life and efficient **GX53 LED lamp** in different wattages.

				*ADD. SUFFIX
GX53 LED	**7 W**	**600 Lm**	4000 K	.A1L
			3000 K	.A1R
	11 W	**1300 Lm**	4000 K	.B1L
			3000 K	.B1R
	18 W	**2000 Lm**	4000 K	.E1L
			3000 K	.E1R
	7 W + SENSOR	**600 Lm**	4000 K	.ASL
			3000 K	.ASR
GX53 LED	**11 W** + SENSOR	**1300 Lm**	4000 K	.BSL
			3000 K	.BSR
	18 W + SENSOR	**2000 Lm**	4000 K	.ESL
			3000 K	.ESR



7W 11W 18W = **60W 100W 150W** incandescent

SAVE 90%

2x E27



4P2.000

Floodlight supplied **fully pre-wired** with white resin reflective ceiling and complete with **2x E27 lampholders**.
Daylight and motion sensor available as option. Sensor operating voltage: 220-240V. (120V version available on demand).

		*ADD. SUFFIX
2x E27 (CFL -LED)	max 160 mm	.E28
2x E27 + SENSOR	max 160 mm	.ES8

POST VERSION



Detailed information on next page.

** ADD THESE SUFFIXES TO THE REFERENCES MENTIONED IN THE CATALOGUE*

GIUSEPPE

FLOODLIGHT



4P2.000.D4L



4P1.000.E1L



4P2.613.010.D4L

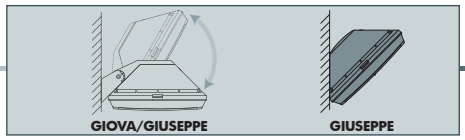

GIUSEPPE
FLOODLIGHT

GIUSEPPE GX53		
4P1.000.A1L	**7W**	4P1.000.A1R
4P1.000.B1L	**11W**	4P1.000.B1R
4P1.000.E1L	**18W**	4P1.000.E1R
4P2.000.C4L	**28W**	4P2.000.C4R
4P2.000.D4L	**40W**	4P2.000.D4R
4000K	GX53 LED LAMP INCLUDED	*3000K*

Pcs 10
Kg 29
mc 0,195

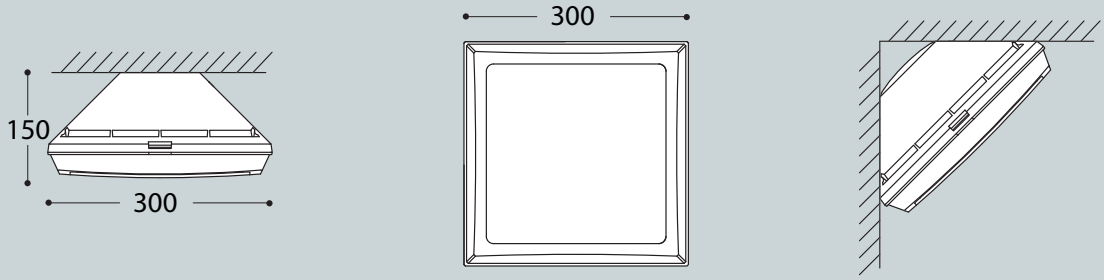

GIUSEPPE 2xE27	
2xE27 lampholder	4P2.000.E28
2xE27 with sensor	4P2.000.ES8

Pcs 10
Kg 19
mc 0,195

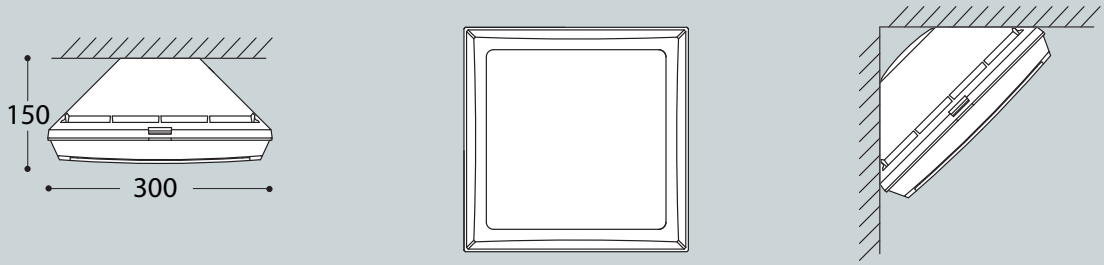

PINA 1L		
4P1.613.010.A1L	**7W**	4P1.613.010.A1R
4P1.613.010.B1L	**11W**	4P1.613.010.B1R
4P1.613.010.E1L	**18W**	4P1.613.010.E1R
4P2.613.010.C4L	**28W**	4P2.613.010.C4R
4P2.613.010.D4L	**40W**	4P2.613.010.D4R
4000K	GX53 LED LAMP INCLUDED	*3000K*

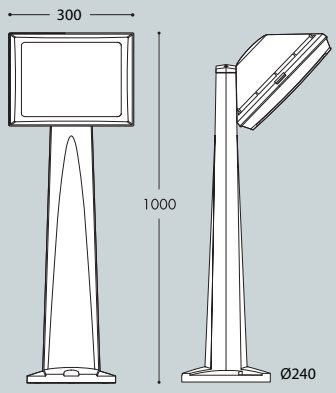

Pcs 1
Kg 4,5
mc 0,097

2xE27 lampholder	4P2.613.010.E28
2xE27 with sensor	4P2.613.010.ES8

PINA 2L		
4P1.613.020.A1L	**2x 7W**	4P1.613.020.A1R
4P1.613.020.B1L	**2x 11W**	4P1.613.020.B1R
4P1.613.020.E1L	**2x 18W**	4P1.613.020.E1R
4P2.613.020.C4L	**2x 28W**	4P2.613.020.C4R
4P2.613.020.D4L	**2x 40W**	4P2.613.020.D4R
4000K	GX53 LED LAMPS INCLUDED	*3000K*

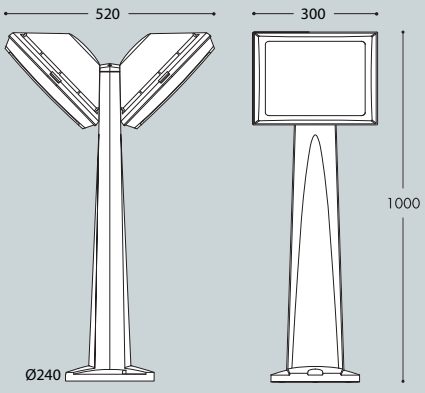

Pcs 1
Kg 7
mc 0,097

2xE27 lampholder	4P2.613.020.E28
2xE27 with sensor	4P2.613.020.ES8





IN-GROUND

CECI 90

IN-GROUND

DRIVE-OVER in-ground luminaries with no visible screws, made of shockproof resin material, UV-rays stabilized, rust and corrosion-free. Round or square shape available with several cover versions. Supplied as standard with TÜV approved, long-life and efficient **GU10 LED lamp included**. Insulation class II, Protection rating IP67.

*Apparecchio per incasso a terra CARRABILE e senza viti a vista, realizzato in resina antiurto, stabilizzata ai raggi UV, inattaccabile da ruggine e corrosione. Disponibile con forma quadrata o circolare in diverse versioni di cover. Fornito con inclusa **lampadina a LED GU10** approvata TÜV, di lunga durata ed elevata efficienza. Classe di isolamento II, grado di protezione IP67.*



CECI 90
1F1.000

CECI 90-2L
1F2.000

CECI 90-3L
1F3.000

CECI 90-SQ
1F4.000



1F1.000.U1L

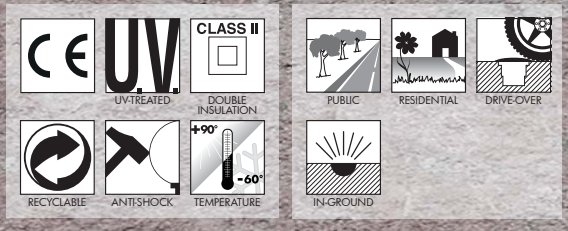



CECI 90 - COMPONENTS



IP67

DRIVE-OVER

COVER with no visible screws made of shockproof resin material, UV rays stabilized, rust and corrosion free. Round or square design, 2 or 3 light versions available for a diffuse or directed light emission.

COVER *senza viti a vista realizzata in resina antiurto, stabilizzata ai raggi UV, inattaccabile da ruggine e corrosione. Disponibile nelle versioni quadrata o ad anello, a 2 aperture e a 3 aperture per permettere un'emissione della luce diffusa o direzionata.*

DIFFUSER made of high impact and high-pressure load resistant resin material (PC), complete with silicone rubber gasket to ensure high protection against external agents. Frosted or coloured versions, to get a customized ambiance.

DIFFUSORE *in resina antiurto altamente resistente al carico (PC), completo di guarnizione in gomma siliconica per garantire un alto livello di protezione contro gli agenti esterni. Disponibile nella versione satinata o colorata, per ottenere un'ambientazione personalizzata.*

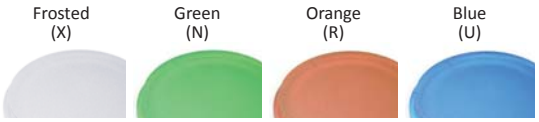

HOUSING made of shockproof resin material, provided with double holes and double watertight cable glands for safe connecting cable.

CASSA *realizzata in resina antiurto, provvista di doppi fori e doppio pressacavo a tenuta stagna, per consentire in maniera sicura l'ingresso e l'uscita delle connessioni elettriche.*

INSTALLATION HOUSING made of shockproof resin material to be fixed into the ground before installing the luminaries.

CONTRO-CASSA *in resina antiurto da fissare al suolo prima dell'installazione degli apparecchi.*

CECI 90



Dimensions and weight
Installation housing depth: 127 mm
Diameter: Ø 92 mm
Weight: 0,35 Kg

Cover colours:
Black *Grey*

Diffuser PC:
Frosted
Blue *Green* *Orange*

GU10 LED



				*ADD. SUFFIX
GU10 LED	3,5 W	400 Lm	4000 K	.U1L
			3000 K	.U1R

In-ground supplied as standard with TÜV approved, long-life and efficient **GU10 LED lamp included**. Quick and easy lamp replacement for a very simple maintenance after installation.

- **COST SAVING:** long-life and efficient LED light sources
- **BUILT-IN DRIVER:** quick and easy lamp replacement
- **GREAT FLEXIBILITY:** GU10 standard lamp holder
- **FUTURE-PROOFED LUMINARIES:** performances easy to upgrade to latest technology developments
- **SUITABLE FOR OUTDOOR USE:** built-in driver fully protected against heat and humidity by silicone paste.



LED LAMPS

More technical details about TÜV approved Fumagalli LED Lamps on page 512.

** ADD THESE SUFFIXES TO THE REFERENCES MENTIONED IN THE CATALOGUE*

CECI 90

IN-GROUND









MADE IN ITALY

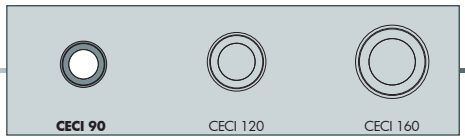

CECI 90

1F1.000.U1L	**3,5W**	1F1.000.U1R
4000K	GU10 LED LAMP INCLUDED	*3000K*

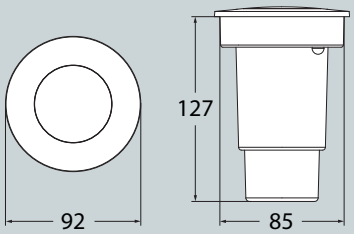

Pcs 40
Kg 13,7
mc 0,084

CECI 90-3L

1F3.000.U1L	**3,5W**	1F3.000.U1R
4000K	GU10 LED LAMP INCLUDED	*3000K*

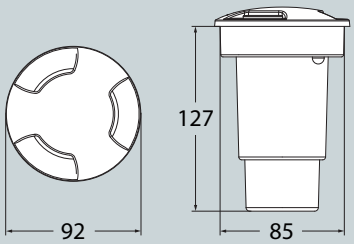

Pcs 40
Kg 13,7
mc 0,084

CECI 90-2L

1F2.000.U1L	**3,5W**	1F2.000.U1R
4000K	GU10 LED LAMP INCLUDED	*3000K*

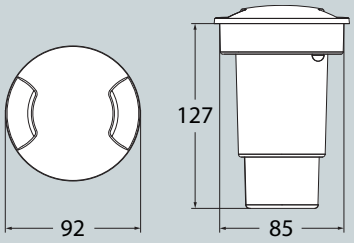

Pcs 40
Kg 13,7
mc 0,084

CECI 90-SQ

1F4.000.U1L	**3,5W**	1F4.000.U1R
4000K	GU10 LED LAMP INCLUDED	*3000K*

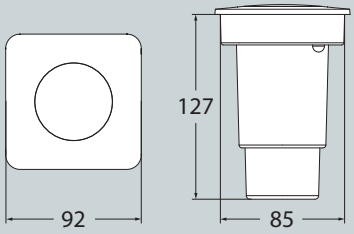

Pcs 40
Kg 13,7
mc 0,084

CECI 120

IN-GROUND

DRIVE-OVER in-ground luminaries with no visible screws, made of shockproof resin material, UV-rays stabilized, rust and corrosion-free. Round or square shape available with several cover versions. Supplied as standard with TÜV approved, long-life and efficient **GX53 LED lamp 3W-350lm included**. Insulation class II, Protection rating IP67.

*Apparecchio per incasso a terra CARRABILE e senza viti a vista, realizzato in resina antiurto, stabilizzata ai raggi UV, inattaccabile da ruggine e corrosione. Disponibile con forma quadrata o circolare in diverse versioni di cover. Fornito con inclusa **lampadina a LED GX53 3W-350lm** approvata TÜV, di lunga durata ed elevata efficienza. Classe di isolamento II, grado di protezione IP67.*


CECI 120
2F1.000


CECI 120-2L
2F2.000


CECI 120-3L
2F3.000


CECI 120-SQ
2F4.000

2F1.000.G1L

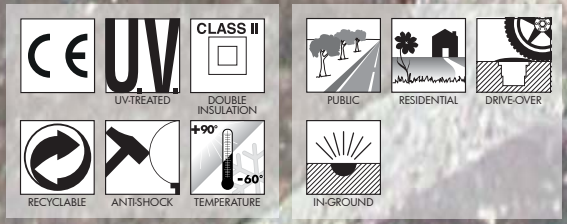

CECI 120 - COMPONENTS



IP67

DRIVE-OVER

COVER with no visible screws made of shockproof resin material, UV-rays stabilized, rust and corrosion free. Round or square design, 2 or 3 light versions available for a diffuse or directed light emission.

COVER *senza viti a vista realizzata in resina antiurto, stabilizzata ai raggi UV, inattaccabile da ruggine e corrosione. Disponibile nelle versioni quadrata o ad anello, a 2 aperture e a 3 aperture per permettere un'emissione della luce diffusa o direzionata.*

DIFFUSER made of high impact and high-pressure load resistant resin material (PC), complete with silicone rubber gasket to ensure high protection against external agents. Frosted or coloured versions, to get a customized ambiance.

DIFFUSORE *in resina antiurto altamente resistente al carico (PC), completo di guarnizione in gomma siliconica per garantire un alto livello di protezione contro gli agenti esterni. Disponibile nella versione satinata o colorata, per ottenere un'ambientazione personalizzata.*

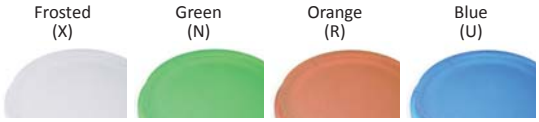

HOUSING made of shockproof resin material, provided with double holes and double watertight cable glands for safe connecting cable.

CASSA *realizzata in resina antiurto, provvista di doppi fori e doppio pressacavo a tenuta stagna, per consentire in maniera sicura l'ingresso e l'uscita delle connessioni elettriche.*

INSTALLATION HOUSING made of shockproof resin material to be fixed into the ground before installing the luminaries.

CONTRO-CASSA *in resina antiurto da fissare al suolo prima dell'installazione degli apparecchi.*

CECI 120



Dimensions and weight
Installation housing depth: 93 mm
Diameter: Ø 120 mm
Weight: 0,45 Kg

Cover colours:
Black *Grey*

Diffuser PC:
Frosted
Blue *Green* *Orange*

GX53 LED



				*ADD. SUFFIX
GX53 LED	3 W	350 Lm	4000 K	.G1L
			3000 K	.G1R

In-ground supplied as standard with TÜV approved, long-life and efficient **GX53 LED lamp 3W-350lm included**. Quick and easy lamp replacement for a very simple maintenance after installation.

- **COST SAVING:** long-life and efficient LED light sources
- **BUILT-IN DRIVER:** quick and easy lamp replacement
- **GREAT FLEXIBILITY:** GX53 standard lamp holder
- **FUTURE-PROOFED LUMINARIES:** performances easy to upgrade to latest technology developments.



3W 350 Lm = **40W** incandescent

SAVE 93%

LED LAMPS

More technical details about TÜV approved Fumagalli LED Lamps on page 512.

** ADD THESE SUFFIXES TO THE REFERENCES MENTIONED IN THE CATALOGUE*

CECI 120

IN-GROUND









MADE IN ITALY

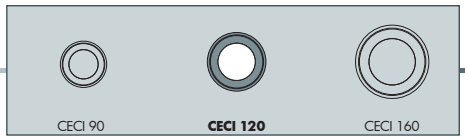

CECI 120

2F1.000.G1L	**3W**	2F1.000.G1R
4000K	GX53 LED LAMP INCLUDED	*3000K*

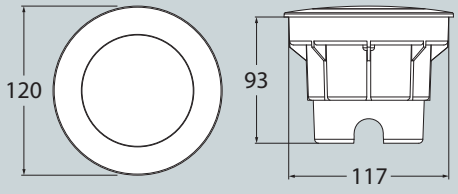

Pcs 36
Kg 15,7
mc 0,084

CECI 120-3L

2F3.000.G1L	**3W**	2F3.000.G1R
4000K	GX53 LED LAMP INCLUDED	*3000K*

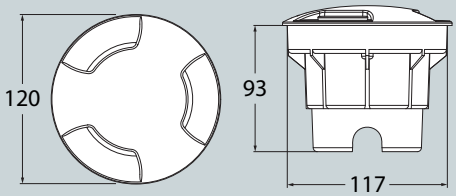

Pcs 36
Kg 15,7
mc 0,084

CECI 120-2L

2F2.000.G1L	**3W**	2F2.000.G1R
4000K	GX53 LED LAMP INCLUDED	*3000K*

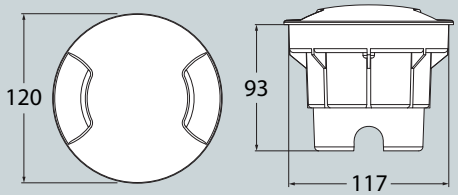

Pcs 36
Kg 15,7
mc 0,084

CECI 120-SQ

2F4.000.G1L	**3W**	2F4.000.G1R
4000K	GX53 LED LAMP INCLUDED	*3000K*

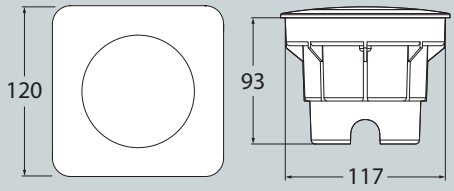

Pcs 36
Kg 15,7
mc 0,084

CECI 160

IN-GROUND

DRIVE-OVER in-ground luminaries with no visible screws, made of shockproof resin material, UV-rays stabilized, rust and corrosion-free. Round or square shape available with several cover versions. Supplied as standard with TÜV approved, long-life and efficient **GX53 LED lamp included**. Insulation class II, Protection rating IP67.

*Apparecchio per incasso a terra CARRABILE e senza viti a vista, realizzato in resina antiurto, stabilizzata ai raggi UV, inattaccabile da ruggine e corrosione. Disponibile con forma quadrata o circolare in diverse versioni di cover. Fornito con inclusa **lampadina a LED GX53** approvata TÜV, di lunga durata ed elevata efficienza. Classe di isolamento II, grado di protezione IP67.*

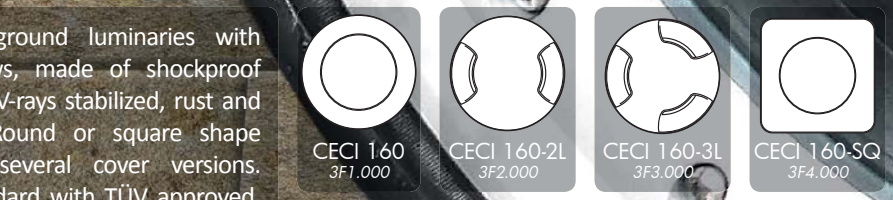

CECI 160
3F1.000

CECI 160-2L
3F2.000

CECI 160-3L
3F3.000

CECI 160-SQ
3F4.000



3F3.000.D1L

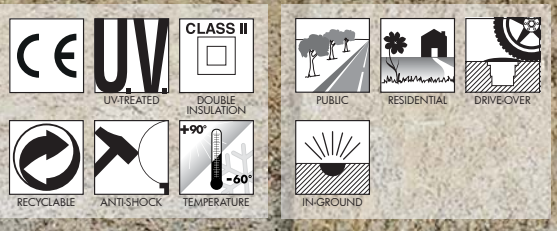

CECI 160 - COMPONENTS



IP67

COVER with no visible screws made of shockproof resin material, UV-rays stabilized, rust and corrosion free. Round or square design, 2 or 3 light versions available for a diffuse or directed light emission.

COVER *senza viti a vista realizzata in resina antiurto, stabilizzata ai raggi UV, inattaccabile da ruggine e corrosione. Disponibile nelle versioni quadrata o ad anello, a 2 aperture e a 3 aperture per permettere un'emissione della luce diffusa o direzionata.*

DRIVE-OVER

DIFFUSER made of high impact and high-pressure load resistant resin material (PC), complete with silicone rubber gasket to ensure high protection against external agents. Frosted or coloured versions, to get a customized ambiance.

DIFFUSORE *in resina antiurto altamente resistente al carico (PC), completo di guarnizione in gomma siliconica per garantire un alto livello di protezione contro gli agenti esterni. Disponibile nella versione satinata o colorata, per ottenere un'ambientazione personalizzata.*

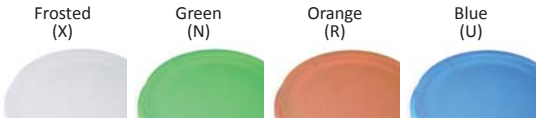

HOUSING made of shockproof resin material, provided with double holes and double watertight cable glands for safe connecting cable.

CASSA *realizzata in resina antiurto, provvista di doppi fori e doppio pressacavo a tenuta stagna, per consentire in maniera sicura l'ingresso e l'uscita delle connessioni elettriche.*

INSTALLATION HOUSING made of shockproof resin material to be fixed into the ground before installing the luminaries.

CONTRO-CASSA *in resina antiurto da fissare al suolo prima dell'installazione degli apparecchi.*

CECI 160



Dimensions and weight
Installation housing depth: 111 mm
Diameter: Ø 160 mm
Weight: 0,8 Kg

Cover colours:
Black *Grey*

Diffuser PC:
Frosted
Blue *Green* *Orange*

GX53 LED



In-ground supplied as standard with TÜV approved, long-life and efficient **GX53 LED lamp included**. Different wattages available. Quick and easy lamp replacement for a very simple maintenance after installation.

- **COST SAVING:** long-life and efficient LED light sources
- **BUILT-IN DRIVER:** quick and easy lamp replacement
- **GREAT FLEXIBILITY:** GX53 standard lamp holder
- **FUTURE-PROOFED LUMINARIES:** performances easy to upgrade to latest technology developments
- **SUITABLE FOR OUTDOOR USE:** built-in driver fully protected against heat and humidity by silicone paste.

				*ADD. SUFFIX
GX53 LED	7 W	800 Lm	4000 K	.C1L
			3000 K	.C1R
	10 W	1200 Lm	4000 K	.D1L
			3000 K	.D1R



7W 800 Lm = **75W** incandescent

SAVE 90%



10W 1200 Lm = **100W** incandescent

SAVE 90%

LED LAMPS

More technical details about TÜV approved Fumagalli LED Lamps on page 512.

** ADD THESE SUFFIXES TO THE REFERENCES MENTIONED IN THE CATALOGUE*

CECI 160

IN-GROUND









MADE IN ITALY

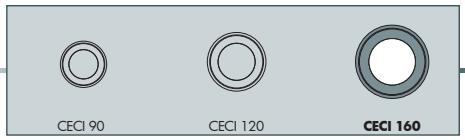

CECI 160		
3F1.000.C1L	**7W**	3F1.000.C1R
3F1.000.D1L	**10W**	3F1.000.D1R
4000K	GX53 LED LAMP INCLUDED	*3000K*

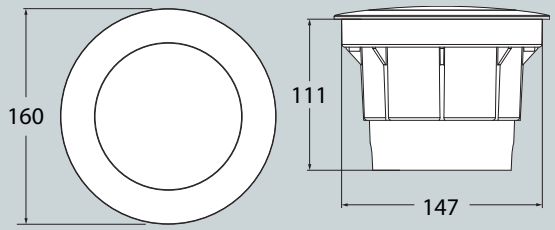

Pcs 18
Kg 14,3
mc 0,084

CECI 160-3L		
3F3.000.C1L	**7W**	3F3.000.C1R
3F3.000.D1L	**10W**	3F3.000.D1R
4000K	GX53 LED LAMP INCLUDED	*3000K*

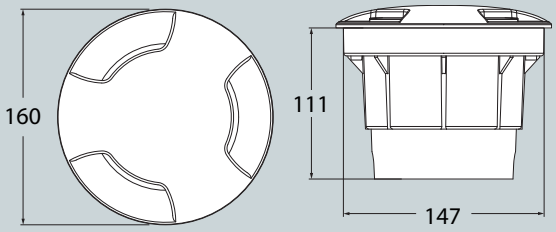

Pcs 18
Kg 14,3
mc 0,084

CECI 160-2L		
3F2.000.C1L	**7W**	3F2.000.C1R
3F2.000.D1L	**10W**	3F2.000.D1R
4000K	GX53 LED LAMP INCLUDED	*3000K*

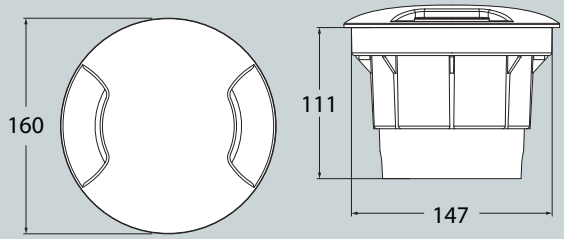

Pcs 18
Kg 14,3
mc 0,084

CECI 160-SQ		
3F4.000.C1L	**7W**	3F4.000.C1R
3F4.000.D1L	**10W**	3F4.000.D1R
4000K	GX53 LED LAMP INCLUDED	*3000K*

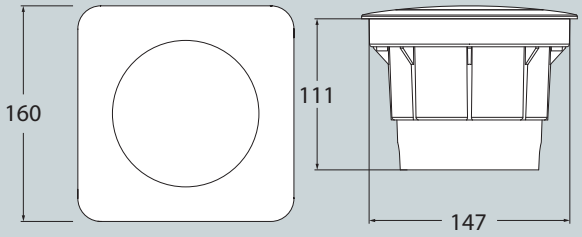

Pcs 18
Kg 14,3
mc 0,084





LETI 100 ROUND

RECESSED LAMP

Recessed wall lamp with round shape, made of shockproof resin material, UV-rays stabilized, rust and corrosion-free. Supplied as standard with TÜV approved, long-life and efficient **GX53 LED lamp 3W-350lm included.** Available in 4 different cover options to get a diffuse or downwards directed light emission. Insulation class II, Protection rating IP66.

*Lampada LED per incasso a muro con forma circolare, realizzata in resina antiurto, stabilizzata ai raggi UV, inattaccabile da ruggine e corrosione. Fornito con inclusa **lampadina a LED GX53 3W-350lm** approvata TÜV, di lunga durata ed elevata efficienza. Disponibile in 4 differenti versioni di cover per permettere un'emissione della luce diffusa o diretta verso il basso. Classe di isolamento II, grado di protezione IP66.*



LETI 100 ROUND
2C1.000



LETI 100 ROUND-GR
2C2.000



LETI 100 ROUND-EL
2C3.000



LETI 100 ROUND-ST
2C4.000



2C1.000.G1L

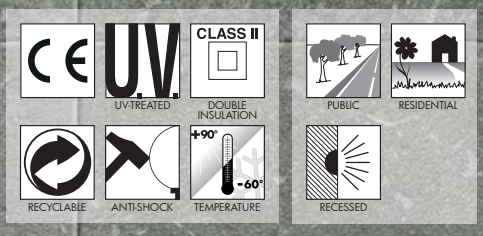

LETI 100 ROUND - COMPONENTS

IP66



COVER made of shockproof resin material, UV-rays stabilized, rust and corrosion free. Different shapes available allowing a diffuse or a downwards light emission.

***COVER** realizzata in resina antiurto, stabilizzata ai raggi UV, inattacabile da ruggine e corrosione. Disponibile in diverse versioni per permettere un'emissione della luce diffusa o diretta verso il basso.*

Opal **DIFFUSER** made of UV-rays stabilized polymethylmethacrylate (PMMA).

***DIFFUSORE** opale realizzato in polimetilmetacrilato (PMMA) stabilizzato ai raggi UV.*

High quality silicone rubber **GASKET** to ensure high protection against external agents.

***GUARNIZIONE** in gomma siliconica per garantire un alto livello di protezione contro gli agenti esterni.*

HOUSING made of shockproof resin material, UV rays stabilized, suitable for the electrical devices fixation. Provided with **GX53 3W led lamp** and with silicone rubber gasket to ensure high protection against external agents.

***CASSA** realizzata in resina antiurto, stabilizzata ai raggi UV, adatta ad alloggiare gli accessori elettrici. Fornita completa di **lampadina led 3W GX53** e guarnizione in gomma siliconica per garantire un alto livello di protezione contro gli agenti esterni.*

INSTALLATION HOUSING made of resin material to be cemented into the wall before installing the luminaries. Provided with double cable entry with silicone cable gland.

***CONTRO-CASSA** in resina da cementare nel muro prima dell'installazione degli apparecchi. Completa di doppia entrata per il cavo elettrico e passacavo in gomma.*

LETI 100 ROUND



Dimensions and weight
Diameter: Ø 134 mm
Installation housing depth: 80 mm
Weight: 0,4 Kg

Moulded colours:
Black *White* *Grey*

Diffuser PMMA:
Opal

GX53 LED

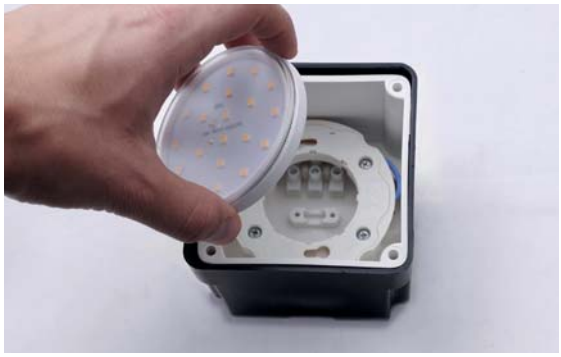

				*ADD. SUFFIX
GX53 LED	3 W	350 Lm	4000 K	.G1L
			3000 K	.G1R



Recessed lamp supplied as standard with TÜV approved, long-life and efficient **GX53 LED lamp 3W-350lm included**. Quick and easy lamp replacement for a very simple maintenance after installation.

- **COST SAVING:** long-life and efficient LED light sources
- **BUILT-IN DRIVER:** quick and easy lamp replacement
- **GREAT FLEXIBILITY:** GX53 standard lamp holder
- **FUTURE-PROOFED LUMINARIES:** performances easy to upgrade to latest technology developments.

LED LAMPS

More technical details about TÜV approved Fumagalli LED Lamps on page 512.

** ADD THESE SUFFIXES TO THE REFERENCES MENTIONED IN THE CATALOGUE*

LETI 100 ROUND

RECESSED LAMP









MADE IN ITALY

LETI 100 ROUND

2C1.000.G1L	3W	2C1.000.G1R
4000K	GX53 LED LAMP INCLUDED	*3000K*

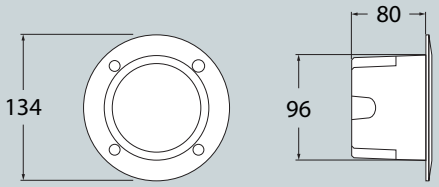

Pcs 48
Kg 20,3
mc 0,12

LETI 100 ROUND-GR

2C2.000.G1L	3W	2C2.000.G1R
4000K	GX53 LED LAMP INCLUDED	*3000K*

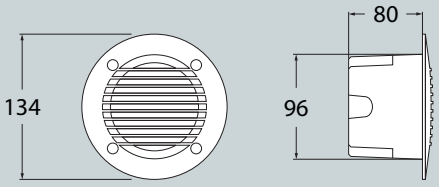

Pcs 48
Kg 20,3
mc 0,12

LETI 100 ROUND-EL

2C3.000.G1L	3W	2C3.000.G1R
4000K	GX53 LED LAMP INCLUDED	*3000K*

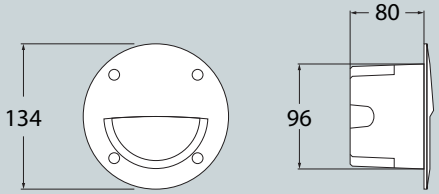

Pcs 48
Kg 20,3
mc 0,12

LETI 100 ROUND-ST

2C4.000.G1L	3W	2C4.000.G1R
4000K	GX53 LED LAMP INCLUDED	*3000K*

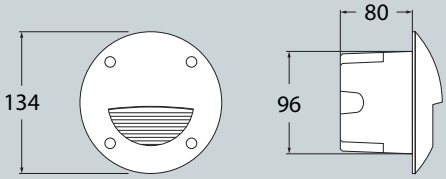

Pcs 48
Kg 20,3
mc 0,12

LETI 100 SQUARE

RECESSED LAMP

Recessed wall lamp with square shape, made of shockproof resin material, UV-rays stabilized, rust and corrosion-free. Supplied as standard with TÜV approved, long-life and efficient **GX53 LED lamp 3W-350lm** included. Available in 4 different cover options to get a diffuse or downwards directed light emission. Insulation class II, Protection rating IP66.

*Lampada ad incasso a muro con forma quadra, realizzata in resina antiurto stabilizzata ai raggi UV, inattaccabile da ruggine e corrosione. Fornito con inclusa **lampadina a LED GX53 3W-350lm** approvata TÜV, di lunga durata ed elevata efficienza. Disponibile in 4 differenti versioni di cover per permettere un'emissione della luce diffusa o diretta verso il basso. Classe di isolamento II, grado di protezione IP66.*

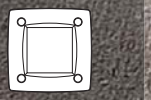

LETI 100 SQUARE
3C1.000



LETI 100 SQUARE-GR
3C2.000



LETI 100 SQUARE-EL
3C3.000



LETI 100 SQUARE-ST
3C4.000



3C1.000.G1L

UV-TREATED · DOUBLE INSULATION · PUBLIC · RESIDENTIAL · RECYCLABLE · ANTI-SHOCK · TEMPERATURE · RECESSED

MADE IN ITALY

LETI 100 SQUARE - COMPONENTS

IP66



COVER made of shockproof resin material, UV-rays stabilized, rust and corrosion free. Different shapes available allowing a diffuse or a downwards light emission.

***COVER** realizzata in resina antiurto, stabilizzata ai raggi UV, inattacabile da ruggine e corrosione. Disponibile in diverse versioni per permettere un'emissione della luce diffusa o diretta verso il basso.*

Opal **DIFFUSER** made of UV-rays stabilized polymethylmethacrylate (PMMA).

***DIFFUSORE** opale realizzato in polimetilmetacrilato (PMMA) stabilizzato ai raggi UV.*

High quality silicone rubber **GASKET** to ensure high protection against external agents.

***GUARNIZIONE** in gomma siliconica per garantire un alto livello di protezione contro gli agenti esterni.*

HOUSING made of shockproof resin material, UV rays stabilized, suitable for the electrical devices fixation. Provided with **GX53 3W led lamp** and with silicone rubber gasket to ensure high protection against external agents.

***CASSA** realizzata in resina antiurto, stabilizzata ai raggi UV, adatta ad alloggiare gli accessori elettrici. Fornita completa di **lampadina led 3W GX53** e guarnizione in gomma siliconica per garantire un alto livello di protezione contro gli agenti esterni.*

INSTALLATION HOUSING made of resin material to be cemented into the wall before installing the luminaries. Provided with double cable entry with silicone cable gland.

***CONTRO-CASSA** in resina da cementare nel muro prima dell'installazione degli apparecchi. Completa di doppia entrata per il cavo elettrico e passacavo in gomma.*

LETI 100 SQUARE



Dimensions and weight
Height: 115 mm
Width: 115 mm
Installation housing depth: 80 mm
Weight: 0,4 Kg

Moulded colours:
Black *White* *Grey*

Diffuser PMMA:
Opal

GX53 LED

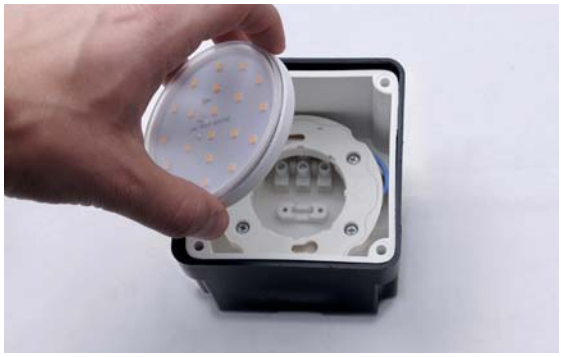

				*ADD. SUFFIX
GX53 LED	**3 W**	**350 Lm**	4000 K	.G1L
			3000 K	.G1R



Recessed lamp supplied as standard with TÜV approved, long-life and efficient **GX53 LED lamp 3W-350lm included**. Quick and easy lamp replacement for a very simple maintenance after installation.

- **COST SAVING:** long-life and efficient LED light sources
- **BUILT-IN DRIVER:** quick and easy lamp replacement
- **GREAT FLEXIBILITY:** GX53 standard lamp holder
- **FUTURE-PROOFED LUMINARIES:** performances easy to upgrade to latest technology developments.

LED LAMPS

More technical details about TÜV approved Fumagalli LED Lamps on page 512.

** ADD THESE SUFFIXES TO THE REFERENCES MENTIONED IN THE CATALOGUE*

LETI 100 SQUARE

RECESSED LAMP









MADE IN ITALY

LETI 100 SQUARE

3C1.000.G1L	**3W**	3C1.000.G1R
4000K	GX53 LED LAMP INCLUDED	*3000K*

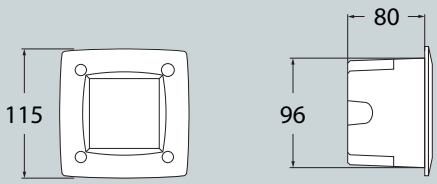

Pcs 48
Kg 20,3
mc 0,12

LETI 100 SQUARE-GR

3C2.000.G1L	**3W**	3C2.000.G1R
4000K	GX53 LED LAMP INCLUDED	*3000K*

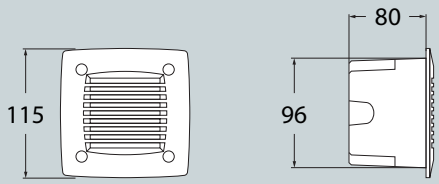

Pcs 48
Kg 20,3
mc 0,12

LETI 100 SQUARE-EL

3C3.000.G1L	**3W**	3C3.000.G1R
4000K	GX53 LED LAMP INCLUDED	*3000K*

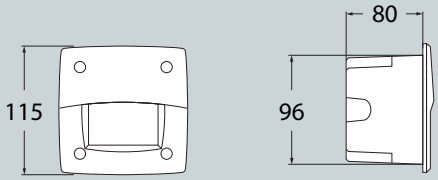

Pcs 48
Kg 20,3
mc 0,12

LETI 100 SQUARE-ST

3C4.000.G1L	**3W**	3C4.000.G1R
4000K	GX53 LED LAMP INCLUDED	*3000K*

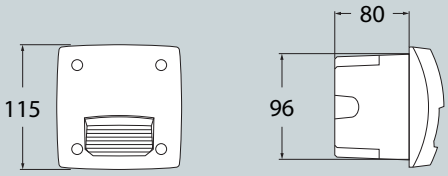

Pcs 48
Kg 20,3
mc 0,12

LETI 200

RECESSED LAMP

Recessed wall lamp with rectangular shape, made of shockproof resin material, UV-rays stabilized, rust and corrosion-free. Supplied as standard with TÜV approved, long-life and efficient **GX53 LED lamp 3W-350lm included**. Available in 5 different cover options to get a diffuse or downwards directed light emission. Insulation class II, Protection rating IP66.

*Lampada ad incasso a muro con forma rettangolare, realizzata in resina antiurto stabilizzata ai raggi UV, inattaccabile da ruggine e corrosione. Fornita con inclusa **lampadina a LED GX53 3W-350lm** approvata TÜV, di lunga durata ed elevata efficienza. Disponibile in 5 differenti versioni di cover per permettere un'emissione della luce diffusa o diretta verso il basso. Classe di isolamento II, grado di protezione IP66.*


LETI 200
4C1.000


LETI 200-GL
4C2.000


LETI 200-RS
4C3.000


LETI 200-HS
4C4.000


LETI 200-VP
4C5.000



4C4.000.G1L

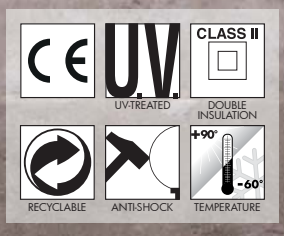



MADE IN ITALY

LETI 200 - COMPONENTS

IP66



COVER made of shockproof resin material, UV-rays stabilized, rust and corrosion free. Different shapes available allowing a diffuse or a downwards light emission.

***COVER** realizzata in resina antiurto, stabilizzata ai raggi UV, inattaccabile da ruggine e corrosione. Disponibile in diverse versioni per permettere un'emissione della luce diffusa o diretta verso il basso.*



Opal **DIFFUSER** made of UV-rays stabilized polymethylmethacrylate (PMMA).

***DIFFUSORE** opale realizzato in polimetilmetacrilato (PMMA) stabilizzato ai raggi UV.*





High quality silicone rubber **GASKET** to ensure high protection against external agents.

***GUARNIZIONE** in gomma siliconica per garantire un alto livello di protezione contro gli agenti esterni.*



HOUSING made of shockproof resin material, UV rays stabilized, suitable for the electrical devices fixation. Provided with **GX53 3W led lamp** and with silicone rubber gasket to ensure high protection against external agents.

***CASSA** realizzata in resina antiurto, stabilizzata ai raggi UV, adatta ad alloggiare gli accessori elettrici. Fornita completa di **lampadina led 3W GX53** e guarnizione in gomma siliconica per garantire un alto livello di protezione contro gli agenti esterni.*



INSTALLATION HOUSING made of resin material to be cemented into the wall before installing the luminaries. Provided with double cable entry with silicone cable gland.

***CONTRO-CASSA** in resina da cementare nel muro prima dell'installazione degli apparecchi. Completa di doppia entrata per il cavo elettrico e passacavo in gomma.*

LETI 200



Dimensions and weight
Height: 113 mm
Width: 188 mm
Installation housing depth: 98 mm
Weight: 0,6 Kg

Moulded colours:
Black *White* *Grey*

Diffuser PMMA:
Opal

GX53 LED



				*ADD. SUFFIX
GX53 LED	3 W	350 Lm	4000 K	.G1L
			3000 K	.G1R



3W
350 Lm
=
40W
incandescent

SAVE 93%

Recessed lamp supplied as standard with TÜV approved, long-life and efficient **GX53 LED lamp 3W-350lm included**. Quick and easy lamp replacement for a very simple maintenance after installation.

- **COST SAVING:** long-life and efficient LED light sources
- **BUILT-IN DRIVER:** quick and easy lamp replacement
- **GREAT FLEXIBILITY:** GX53 standard lamp holder
- **FUTURE-PROOFED LUMINARIES:** performances easy to upgrade to latest technology developments.

LED LAMPS

More technical details about TÜV approved Fumagalli LED Lamps on page 512.

** ADD THESE SUFFIXES TO THE REFERENCES MENTIONED IN THE CATALOGUE*

LETI 200

RECESSED LAMP



4C1.000.G1L



4C2.000.G1L



4C3.000.G1L



4C4.000.G1L



4C5.000.G1L

MADE IN ITALY

LETI 200

4C1.000.G1L	**3W**	4C1.000.G1R
4000K	GX53 LED LAMP INCLUDED	*3000K*

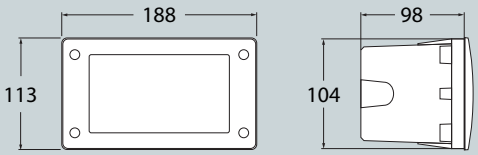

Pcs 36
Kg 22,7
mc 0,12

LETI 200-GL

4C2.000.G1L	**3W**	4C2.000.G1R
4000K	GX53 LED LAMP INCLUDED	*3000K*

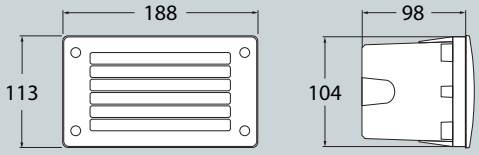

Pcs 36
Kg 22,7
mc 0,12

LETI 200-RS

4C3.000.G1L	**3W**	4C3.000.G1R
4000K	GX53 LED LAMP INCLUDED	*3000K*

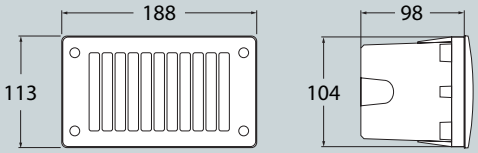

Pcs 36
Kg 22,7
mc 0,12

LETI 200-HS

4C4.000.G1L	**3W**	4C4.000.G1R
4000K	GX53 LED LAMP INCLUDED	*3000K*

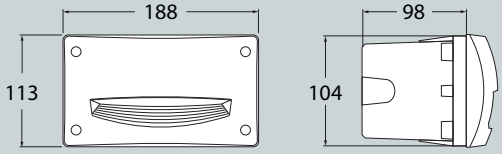

Pcs 36
Kg 22,7
mc 0,12

LETI 200-VP

4C5.000.G1L	**3W**	4C5.000.G1R
4000K	GX53 LED LAMP INCLUDED	*3000K*

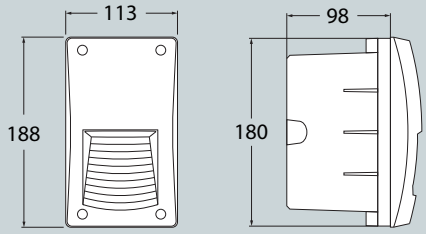

Pcs 36
Kg 22,7
mc 0,12

LETI 300

RECESSED LAMP

Recessed wall lamp with rectangular shape, made of shockproof resin material, UV-rays stabilized, rust and corrosion-free. Supplied as standard with TÜV approved, long-life and efficient **GX53 LED lamps 2x 3W-700lm included**. Available in 5 different cover options to get a diffuse or downwards directed light emission. Insulation class II, Protection rating IP66.

*Lampada LED per incasso a muro con forma rettangolare, realizzata in resina antiurto stabilizzata ai raggi UV, inattaccabile da ruggine e corrosione. Fornita con incluse **2 lampadine a LED GX53 2x 3W-700lm** approvate TÜV, di lunga durata ed elevata efficienza. Disponibile in 5 differenti versioni di cover per permettere un'emissione della luce diffusa o diretta verso il basso. Classe di isolamento II, grado di protezione IP66.*

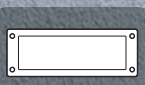
LETI 300
5C1.000


LETI 300-GL
5C2.000


LETI 300-RS
5C3.000


LETI 300-HS
5C4.000


LETI 300-VP
5C5.000



5C4.000.G2L

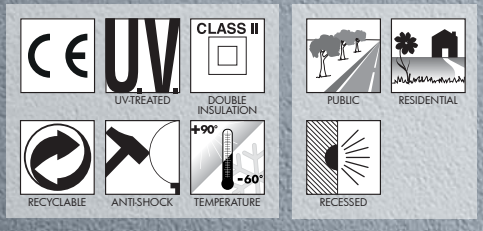

LETI 300 - COMPONENTS



IP66

COVER made of shockproof resin material, UV-rays stabilized, rust and corrosion free. Different shapes available allowing a diffuse or a downwards light emission.

COVER *realizzata in resina antiurto, stabilizzata ai raggi UV, inattaccabile da ruggine e corrosione. Disponibile in diverse versioni per permettere un'emissione della luce diffusa o diretta verso il basso.*

Opal **DIFFUSER** made of UV-rays stabilized polymethylmethacrylate (PMMA).

DIFFUSORE *opale realizzato in polimetilmetacrilato (PMMA) stabilizzato ai raggi UV.*

HOUSING made of shockproof resin material, suitable for the electrical devices fixation. Provided with **2x GX53 3W led lamps** or with E27 lampholders and with silicone rubber gasket to ensure high protection against external agents.

CASSA *realizzata in resina antiurto, adatta ad alloggiare gli accessori elettrici. Fornita completa di* ***2 lampadine led 3W GX53*** *o di portalampada E27 e guarnizione in gomma siliconica per garantire un alto livello di protezione contro gli agenti esterni.*

INSTALLATION HOUSING made of resin material to be cemented into the wall before installing the luminaries. Provided with double cable entry with silicone cable gland.

CONTRO-CASSA *in resina da cementare nel muro prima dell'installazione degli apparecchi. Completa di doppia entrata per il cavo elettrico e passacavo in gomma.*

LETI 300



Dimensions and weight
Height: 113 mm
Width: 293 mm
Installation housing depth: 98 mm
Weight: 0,9 Kg

Moulded colours:
Black *White* *Grey*

Diffuser PMMA:
Opal

GX53 LED

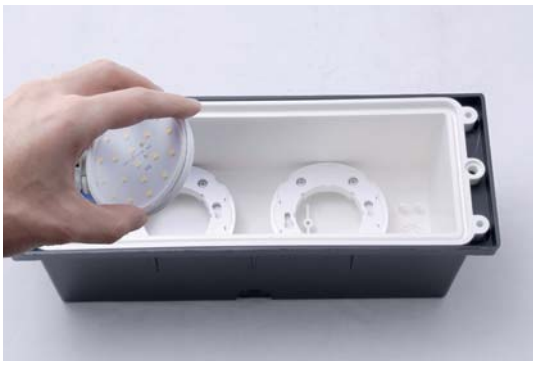

Recessed lamp supplied complete with TÜV approved, long-life and efficient **GX53 LED lamps 2x 3W-700lm included**. Quick and easy lamp replacement for a very simple maintenance after installation.

- **COST SAVING:** long-life and efficient LED light sources
- **BUILT-IN DRIVER:** quick and easy lamp replacement
- **GREAT FLEXIBILITY:** GX53 standard lamp holder
- **FUTURE-PROOFED LUMINARIES:** performances easy to upgrade to latest technology developments.

				*ADD. SUFFIX
GX53 LED	2x 3W **6W**	**700 Lm**	4000 K	.G2L
			3000 K	.G2R



2x 3W 700 Lm = **60W** incandescent

SAVE 90%

E27



Recessed lamp supplied complete with E27 lampholder.

		*ADD. SUFFIX
E27 (CFL -LED)	max 160 mm	.E27

LED LAMPS

More technical details about TÜV approved Fumagalli LED Lamps on page 512.

** ADD THESE SUFFIXES TO THE REFERENCES MENTIONED IN THE CATALOGUE*

LETI 300

RECESSED LAMP



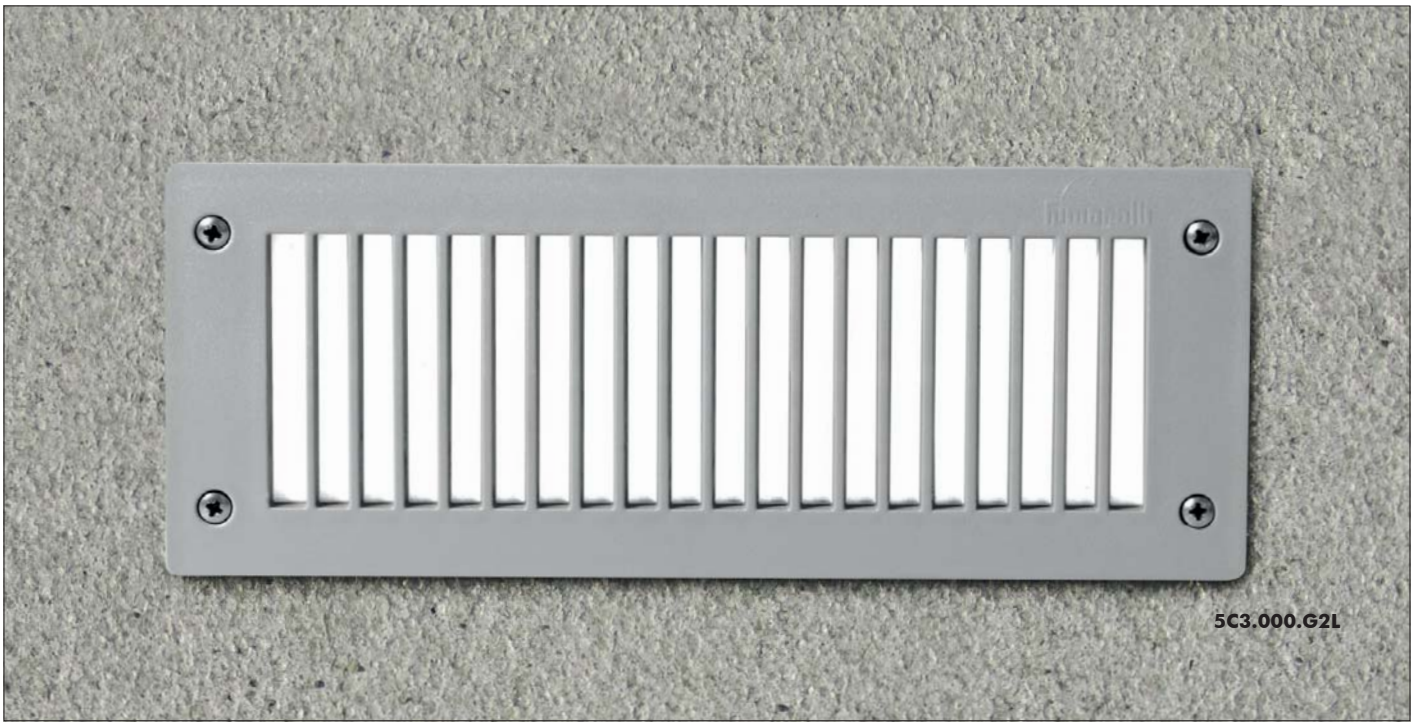







MADE IN ITALY

LETI 300

5C1.000.G2L	**6W**	5C1.000.G2R
4000K	2 GX53 LED LAMPS INCLUDED	*3000K*

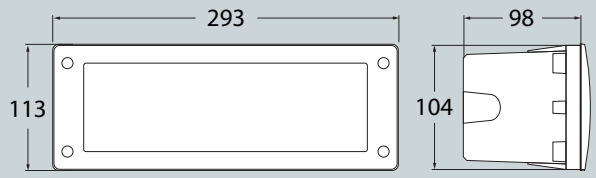

Pcs 24
Kg 22,7
mc 0,12

LETI 300-GL

5C2.000.G2L	**6W**	5C2.000.G2R
4000K	2 GX53 LED LAMPS INCLUDED	*3000K*

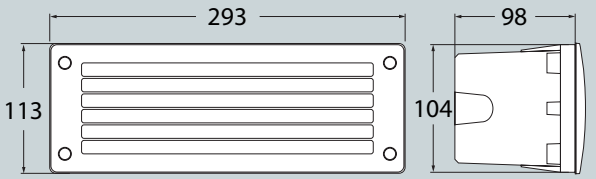

Pcs 24
Kg 22,7
mc 0,12

LETI 300-RS

5C3.000.G2L	**6W**	5C3.000.G2R
4000K	2 GX53 LED LAMPS INCLUDED	*3000K*

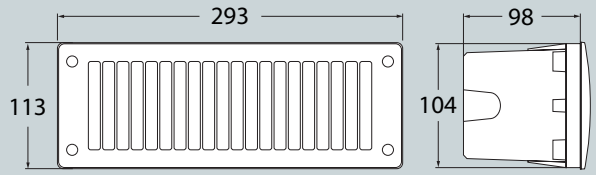

Pcs 24
Kg 22,7
mc 0,12

LETI 300-HS

5C4.000.G2L	**6W**	5C4.000.G2R
4000K	2 GX53 LED LAMPS INCLUDED	*3000K*

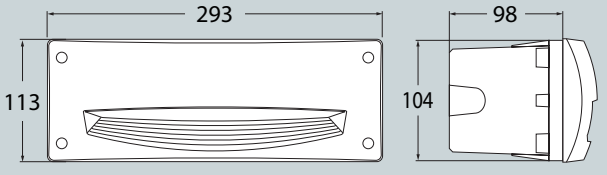

Pcs 24
Kg 22,7
mc 0,12

LETI 300-VP

5C5.000.G2L	**6W**	5C5.000.G2R
4000K	2 GX53 LED LAMPS INCLUDED	*3000K*

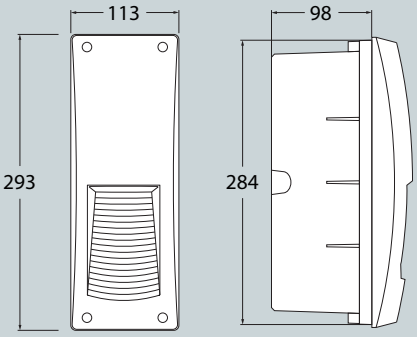

Pcs 24
Kg 22,7
mc 0,12

EXTRALETI 100 ROUND

SURFACE LAMP

Surface wall lamp with round shape, made of shockproof resin material, UV-rays stabilized, rust and corrosion-free. Supplied as standard with TÜV approved, long-life and efficient **GX53 LED lamp 3W-350lm included**. Available in 4 different cover options to get a diffuse or downwards directed light emission. Insulation class II, Protection rating IP66.

*Lampada a muro con forma circolare, realizzata in resina antiurto, stabilizzata ai raggi UV, inattaccabile da ruggine e corrosione. Fornita con inclusa **lampadina a LED GX53 3W-350lm** approvata TÜV, di lunga durata ed elevata efficienza. Disponibile in 4 differenti versioni di cover per permettere un'emissione della luce diffusa o diretta verso il basso. Classe di isolamento II, grado di protezione IP66.*



EXTRALETI 100 ROUND
2S1.000



EXTRALETI 100 ROUND-GR
2S2.000



EXTRALETI 100 ROUND-EL
2S3.000



EXTRALETI 100 ROUND-ST
2S4.000



• **2S3.000.G1L**

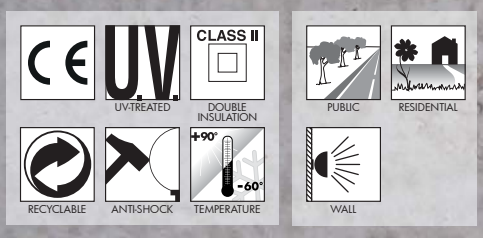

MADE IN ITALY

EXTRALETI 100 ROUND - COMPONENTS

IP66



COVER made of shockproof resin material, UV-rays stabilized, rust and corrosion free. Different shapes available allowing a diffuse or a downwards light emission.

***COVER** realizzata in resina antiurto, stabilizzata ai raggi UV, inattaccabile da ruggine e corrosione. Disponibile in diverse versioni per permettere un'emissione della luce diffusa o diretta verso il basso.*



Opal **DIFFUSER** made of UV-rays stabilized polymethylmethacrylate (PMMA).

***DIFFUSORE** opale realizzato in polimetilmetacrilato (PMMA) stabilizzato ai raggi UV.*





High quality silicone rubber **GASKET** to ensure high protection against external agents.

***GUARNIZIONE** in gomma siliconica per garantire un alto livello di protezione contro gli agenti esterni.*



BODY made of shockproof resin material, UV-rays stabilized, suitable for the electrical devices fixation. Provided with **GX53 3W led lamp** and with silicone rubber gasket to ensure high protection against external agents.

***CORPO** realizzato in resina antiurto, stabilizzata ai raggi UV, adatto ad alloggiare gli accessori elettrici. Fornito completo di **lampadina led 3W GX53** e guarnizione in gomma siliconica per garantire un alto livello di protezione contro gli agenti esterni.*

EXTRALETI 100 ROUND



Dimensions and weight
Diameter: Ø 140 mm
Depth: 64/85 mm
Weight: 0,5 Kg

Moulded colours:
Black | White | Grey

Diffuser PMMA:
Opal

GX53 LED



				*ADD. SUFFIX
GX53 LED	3 W	350 Lm	4000 K	.G1L
			3000 K	.G1R



Surface lamp supplied as standard with TÜV approved, long-life and efficient **GX53 LED lamp 3W-350lm included**. Quick and easy lamp replacement for a very simple maintenance after installation.

- **COST SAVING:** long-life and efficient LED light sources
- **BUILT-IN DRIVER:** quick and easy lamp replacement
- **GREAT FLEXIBILITY:** GX53 standard lamp holder
- **FUTURE-PROOFED LUMINARIES:** performances easy to upgrade to latest technology developments.

LED LAMPS

More technical details about TÜV approved Fumagalli LED Lamps on page 512.

** ADD THESE SUFFIXES TO THE REFERENCES MENTIONED IN THE CATALOGUE*

EXTRALETI 100 ROUND

SURFACE LAMP



2S1.000.G1L



2S4.000.G1L



2S2.000.G1L



2S3.000.G1L

MADE IN ITALY

EXTRALETI 100 ROUND

2S1.000.G1L	3W	2S1.000.G1R
4000K	GX53 LED LAMP INCLUDED	*3000K*

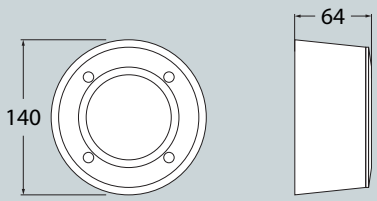

Pcs 48
Kg 20,3
mc 0,12

EXTRALETI 100 ROUND-GR

2S2.000.G1L	3W	2S2.000.G1R
4000K	GX53 LED LAMP INCLUDED	*3000K*

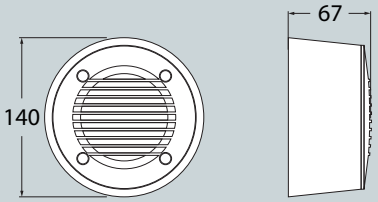

Pcs 48
Kg 20,3
mc 0,12

EXTRALETI 100 ROUND-EL

2S3.000.G1L	3W	2S3.000.G1R
4000K	GX53 LED LAMP INCLUDED	*3000K*

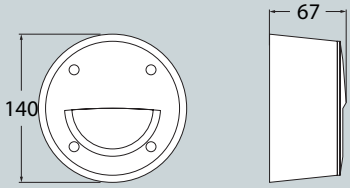

Pcs 48
Kg 20,3
mc 0,12

EXTRALETI 100 ROUND-ST

2S4.000.G1L	3W	2S4.000.G1R
4000K	GX53 LED LAMP INCLUDED	*3000K*

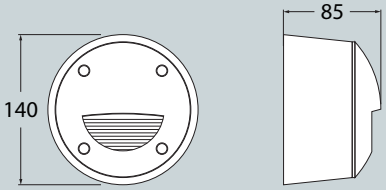

Pcs 48
Kg 20,3
mc 0,12

EXTRALETI 100 SQUARE

SURFACE LAMP

Surface wall lamp with square shape, made of shockproof resin material, UV-rays stabilized, rust and corrosion-free. Supplied as standard with TÜV approved, long-life and efficient **GX53 LED lamp 3W-350lm included**. Available in 4 different cover options to get a diffuse or downwards directed light emission. Insulation class II, Protection rating IP66.

*Lampada a muro con forma quadra, realizzata in resina antiurto stabilizzata ai raggi UV, inattaccabile da ruggine e corrosione. Fornita con inclusa **lampadina a LED GX53 3W-350lm** approvata TÜV, di lunga durata ed elevata efficienza. Disponibile in 4 differenti versioni di cover per permettere un'emissione della luce diffusa o diretta verso il basso. Classe di isolamento II, grado di protezione IP66.*

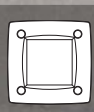

EXTRALETI 100 SQUARE
3S1.000



EXTRALETI 100 SQUARE-GR
3S2.000



EXTRALETI 100 SQUARE-EL
3S3.000



EXTRALETI 100 SQUARE-ST
3S4.000



3S4.000.G1L

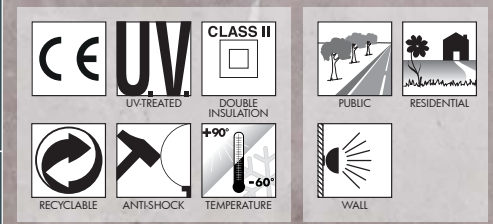

EXTRALETI 100 SQUARE

SURFACE LAMP

EXTRALETI 100 SQUARE - COMPONENTS

IP66



COVER made of shockproof resin material, UV-rays stabilized, rust and corrosion free. Different shapes available allowing a diffuse or a downwards light emission.

***COVER** realizzata in resina antiurto, stabilizzata ai raggi UV, inattaccabile da ruggine e corrosione. Disponibile in diverse versioni per permettere un'emissione della luce diffusa o diretta verso il basso.*



Opal **DIFFUSER** made of UV-rays stabilized polymethylmethacrylate (PMMA).

***DIFFUSORE** opale realizzato in polimetilmetacrilato (PMMA) stabilizzato ai raggi UV.*





High quality silicone rubber **GASKET** to ensure high protection against external agents.

***GUARNIZIONE** in gomma siliconica per garantire un alto livello di protezione contro gli agenti esterni.*



BODY made of shockproof resin material, UV-rays stabilized, suitable for the electrical devices fixation. Provided with **GX53 3W led lamp** and with silicone rubber gasket to ensure high protection against external agents.

***CORPO** realizzato in resina antiurto, stabilizzata ai raggi UV, adatto ad alloggiare gli accessori elettrici. Fornito completo di **lampadina led 3W GX53** e guarnizione in gomma siliconica per garantire un alto livello di protezione contro gli agenti esterni.*

EXTRALETI 100 SQUARE



Dimensions and weight
Height: 120 mm
Width: 120 mm
Depth: 64/85 mm
Weight: 0,5 Kg

Moulded colours:
Black *White* *Grey*

Diffuser PMMA:
Opal

GX53 LED



				*ADD. SUFFIX
GX53 LED	3 W	350 Lm	4000 K	.G1L
			3000 K	.G1R

Surface lamp supplied as standard with TÜV approved, long-life and efficient **GX53 LED lamp 3W-350lm included**. Quick and easy lamp replacement for a very simple maintenance after installation.

- **COST SAVING:** long-life and efficient LED light sources
- **BUILT-IN DRIVER:** quick and easy lamp replacement
- **GREAT FLEXIBILITY:** GX53 standard lamp holder
- **FUTURE-PROOFED LUMINARIES:** performances easy to upgrade to latest technology developments.



LED LAMPS

More technical details about TÜV approved Fumagalli LED Lamps on page 512.

** ADD THESE SUFFIXES TO THE REFERENCES MENTIONED IN THE CATALOGUE*

EXTRALETI 100 SQUARE

SURFACE LAMP









MADE IN ITALY

EXTRALETI 100 SQUARE

SURFACE LAMP

EXTRALETI 100 SQUARE

3S1.000.G1L	**3W**	3S1.000.G1R
4000K	GX53 LED LAMP INCLUDED	*3000K*

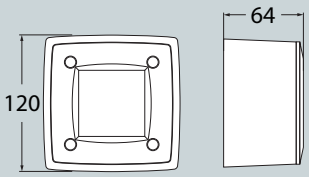

Pcs 48
Kg 20,3
mc 0,12

EXTRALETI 100 SQUARE-GR

3S2.000.G1L	**3W**	3S2.000.G1R
4000K	GX53 LED LAMP INCLUDED	*3000K*

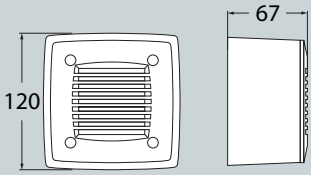

Pcs 48
Kg 20,3
mc 0,12

EXTRALETI 100 SQUARE-EL

3S3.000.G1L	**3W**	3S3.000.G1R
4000K	GX53 LED LAMP INCLUDED	*3000K*

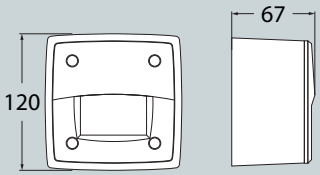

Pcs 48
Kg 20,3
mc 0,12

EXTRALETI 100 SQUARE-ST

3S4.000.G1L	**3W**	3S4.000.G1R
4000K	GX53 LED LAMP INCLUDED	*3000K*

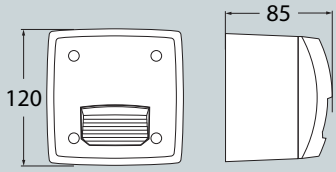

Pcs 48
Kg 20,3
mc 0,12

EXTRALETI 200

SURFACE LAMP

Surface wall lamp with rectangular shape, made of shockproof resin material, UV-rays stabilized, rust and corrosion-free. Supplied as standard with TÜV approved, long-life and efficient **GX53 LED lamp 3W-350lm included**. Available in 5 different cover options to get a diffuse or downwards directed light emission. Insulation class II, Protection rating IP66.

*Lampada a muro con forma rettangolare, realizzata in resina antiurto stabilizzata ai raggi UV, inattaccabile da ruggine e corrosione. Fornita con inclusa **lampadina a LED GX53 3W-350lm** approvata TÜV, di lunga durata ed elevata efficienza. Disponibile in 5 differenti versioni di cover per permettere un'emissione della luce diffusa o diretta verso il basso. Classe di isolamento II, grado di protezione IP66.*

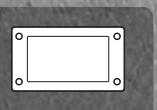
EXTRALETI 200
4S1.000


EXTRALETI 200-GL
4S2.000

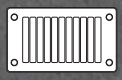
EXTRALETI 200-RS
4S3.000


EXTRALETI 200-HS
4S4.000


EXTRALETI 200-VP
4S5.000



4S1.000.G1L

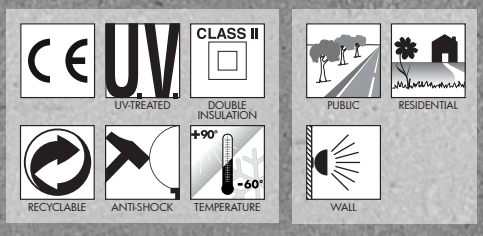

MADE IN ITALY

EXTRALETI 200 - COMPONENTS

IP66



COVER made of shockproof resin material, UV-rays stabilized, rust and corrosion free. Different shapes available allowing a diffuse or a downwards light emission.

***COVER** realizzata in resina antiurto, stabilizzata ai raggi UV, inattacabile da ruggine e corrosione. Disponibile in diverse versioni per permettere un'emissione della luce diffusa o diretta verso il basso.*



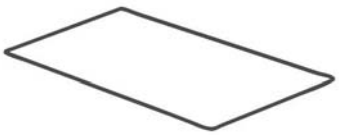

Opal **DIFFUSER** made of UV-rays stabilized polymethylmethacrylate (PMMA).

***DIFFUSORE** opale realizzato in polimetilmetacrilato (PMMA) stabilizzato ai raggi UV.*



High quality silicone rubber **GASKET** to ensure high protection against external agents.

***GUARNIZIONE** in gomma siliconica per garantire un alto livello di protezione contro gli agenti esterni.*



BODY made of shockproof resin material, UV-rays stabilized, suitable for the electrical devices fixation. Provided with **GX53 3W led lamp** and with silicone rubber gasket to ensure high protection against external agents.

***CORPO** realizzato in resina antiurto, stabilizzata ai raggi UV, adatto ad alloggiare gli accessori elettrici. Fornito completo di **lampadina led 3W GX53** e guarnizione in gomma siliconica per garantire un alto livello di protezione contro gli agenti esterni.*

EXTRALETI 200



Dimensions and weight
Height: 120 mm
Width: 200 mm
Depth: 65/85 mm
Weight: 0,7 Kg

Moulded colours:
Black *White* *Grey*

Diffuser PMMA:
Opal

GX53 LED



				*ADD. SUFFIX
GX53 LED	**3 W**	**350 Lm**	4000 K	.G1L
			3000 K	.G1R



3W
350 Lm
=
40W
incandescent

SAVE 93%

Surface lamp supplied as standard with TÜV approved, long-life and efficient **GX53 LED lamp 3W-350lm included**. Quick and easy lamp replacement for a very simple maintenance after installation.

- **COST SAVING:** long-life and efficient LED light sources
- **BUILT-IN DRIVER:** quick and easy lamp replacement
- **GREAT FLEXIBILITY:** GX53 standard lamp holder
- **FUTURE-PROOFED LUMINARIES:** performances easy to upgrade to latest technology developments.

LED LAMPS

More technical details about TÜV approved Fumagalli LED Lamps on page 512.

** ADD THESE SUFFIXES TO THE REFERENCES MENTIONED IN THE CATALOGUE*

EXTRALETI 200

SURFACE LAMP











MADE IN ITALY

EXTRALETI 200

4S1.000.G1L	**3W**	4S1.000.G1R
4000K	GX53 LED LAMP INCLUDED	*3000K*

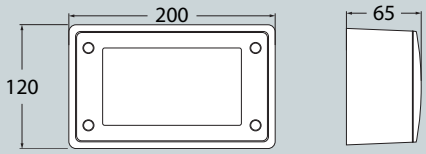

Pcs 36
Kg 22,7
mc 0,12

EXTRALETI 200-GL

4S2.000.G1L	**3W**	4S2.000.G1R
4000K	GX53 LED LAMP INCLUDED	*3000K*

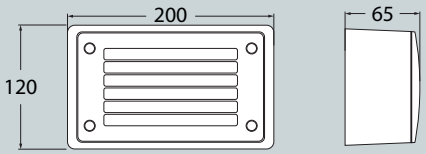

Pcs 36
Kg 22,7
mc 0,12

EXTRALETI 200-RS

4S3.000.G1L	**3W**	4S3.000.G1R
4000K	GX53 LED LAMP INCLUDED	*3000K*

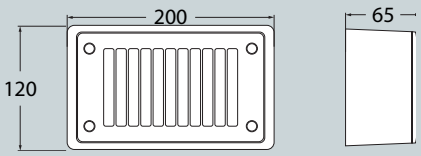

Pcs 36
Kg 22,7
mc 0,12

EXTRALETI 200-HS

4S4.000.G1L	**3W**	4S4.000.G1R
4000K	GX53 LED LAMP INCLUDED	*3000K*

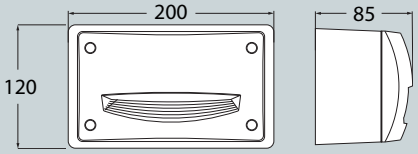

Pcs 36
Kg 22,7
mc 0,12

EXTRALETI 200-VP

4S5.000.G1L	**3W**	4S5.000.G1R
4000K	GX53 LED LAMP INCLUDED	*3000K*

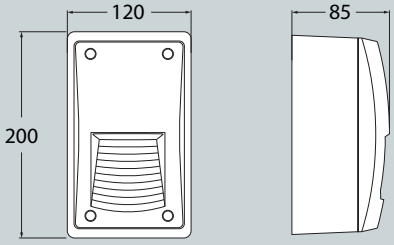

Pcs 36
Kg 22,7
mc 0,12

EXTRALETI 300

SURFACE LAMP

Surface wall lamp with rectangular shape, made of shockproof resin material, UV-rays stabilized, rust and corrosion-free. Supplied as standard with TÜV approved, long-life and efficient **GX53 LED lamps 2x 3W-700lm included**. Available in 5 different cover options to get a diffuse or downwards directed light emission. Insulation class II, Protection rating IP66.

*Lampada a muro con forma rettangolare, realizzata in resina antiurto stabilizzata ai raggi UV, inattaccabile da ruggine e corrosione. Fornita con incluse **2 lampadine a LED GX53 2x 3W-700lm** approvate TÜV, di lunga durata ed elevata efficienza. Disponibile in 5 differenti versioni di cover per permettere un'emissione della luce diffusa o diretta verso il basso. Classe di isolamento II, grado di protezione IP66.*


EXTRALETI 300
5S1.000

EXTRALETI 300-GL
5S2.000

EXTRALETI 300-RS
5S3.000


EXTRALETI 300-HS
5S4.000


EXTRALETI 300-VP
5S5.000



5S1.000.G2L

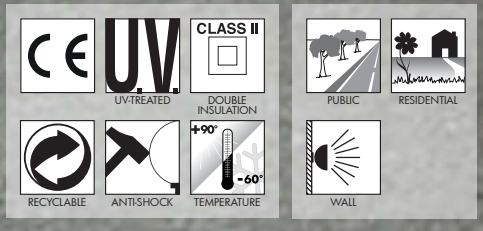

MADE IN ITALY

EXTRALETI 300 - COMPONENTS

IP66



COVER made of shockproof resin material, UV-rays stabilized, rust and corrosion free. Different shapes available allowing a diffuse or a downwards light emission.

***COVER** realizzata in resina antiurto, stabilizzata ai raggi UV, inattaccabile da ruggine e corrosione. Disponibile in diverse versioni per permettere un'emissione della luce diffusa o diretta verso il basso.*

Opal **DIFFUSER** made of UV-rays stabilized polymethylmethacrylate (PMMA).

***DIFFUSORE** opale realizzato in polimetilmetacrilato (PMMA) stabilizzato ai raggi UV.*

High quality silicone rubber **GASKET** to ensure high protection against external agents.

***GUARNIZIONE** in gomma siliconica per garantire un alto livello di protezione contro gli agenti esterni.*

BODY made of shockproof resin material, UV-rays stabilized, suitable for the electrical devices fixation. Provided with **2x GX53 3W led lamps** or with E27 lampholders and with silicone rubber gasket to ensure high protection against external agents.

***CORPO** realizzato in resina antiurto, stabilizzato ai raggi UV, adatto ad alloggiare gli accessori elettrici. Fornito completo di **2 lampadine led 3W** GX53 o di portalampada E27 e guarnizione in gomma siliconica per garantire un alto livello di protezione contro gli agenti esterni.*

EXTRALETI 300



Dimensions and weight
Height: 132 mm
Width: 313 mm
Depth: 93/113 mm
Weight: 1 Kg

Moulded colours:
Black *White* *Grey*

Diffuser PMMA:
Opal

GX53 LED



Surface lamp supplied complete with TÜV approved, long-life and efficient **GX53 LED lamps 2x 3W-700lm included**. Quick and easy lamp replacement for a very simple maintenance after installation.

- **COST SAVING:** long-life and efficient LED light sources
- **BUILT-IN DRIVER:** quick and easy lamp replacement
- **GREAT FLEXIBILITY:** GX53 standard lamp holder
- **FUTURE-PROOFED LUMINARIES:** performances easy to upgrade to latest technology developments.

			*ADD. SUFFIX
GX53 LED	2x 3W **6W**	**700 Lm**	4000 K .G2L
			3000 K .G2R



2x 3W 700 Lm = **60W** incandescent

SAVE 90%

E27

*ADD. SUFFIX



Surface lamp supplied complete with E27 lampholder.

		*ADD. SUFFIX
E27 (CFL -LED)	max 160 mm	.E27

LED LAMPS

More technical details about TÜV approved Fumagalli LED Lamps on page 512.

** ADD THESE SUFFIXES TO THE REFERENCES MENTIONED IN THE CATALOGUE*

EXTRALETI 300

SURFACE LAMP











MADE IN ITALY

EXTRALETI 300

5S1.000.G2L **6W** 5S1.000.G2R

4000K 2 GX53 LED LAMPS INCLUDED *3000K*

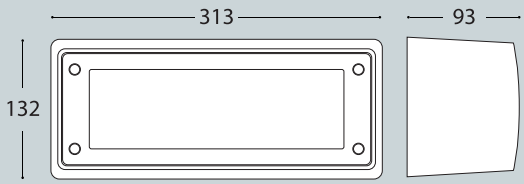

Pcs 20
Kg 19
mc 0,12

EXTRALETI 300-GL

5S2.000.G2L **6W** 5S2.000.G2R

4000K 2 GX53 LED LAMPS INCLUDED *3000K*

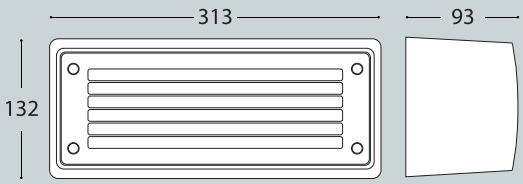

Pcs 20
Kg 19
mc 0,12

EXTRALETI 300-RS

5S3.000.G2L **6W** 5S3.000.G2R

4000K 2 GX53 LED LAMPS INCLUDED *3000K*

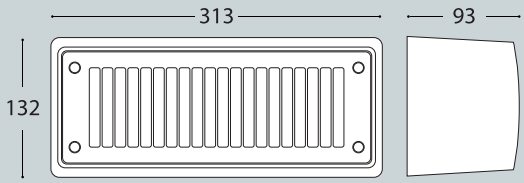

Pcs 20
Kg 19
mc 0,12

EXTRALETI 300-HS

5S4.000.G2L **6W** 5S4.000.G2R

4000K 2 GX53 LED LAMPS INCLUDED *3000K*

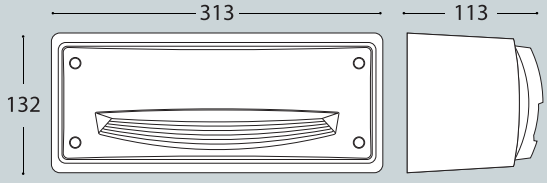

Pcs 12
Kg 11
mc 0,14

EXTRALETI 300-VP

5S5.000.G2L **6W** 5S5.000.G2R

4000K 2 GX53 LED LAMPS INCLUDED *3000K*

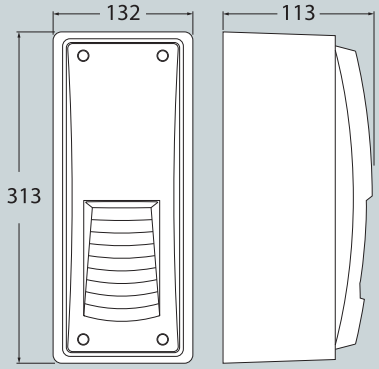

Pcs 12
Kg 11
mc 0,14





GARDEN

ANNA

SMALL SIZE

E27 hexagonal lantern in classic style, made of shockproof resin material, UV-rays stabilized, rust and corrosion-free. Modular construction suitable for post top, hanging and wall installation. Supplied as optional with TÜV approved, long-life and efficient **LED filament lamps** suitable for outdoor use. Insulation class II, protection rating IP55.

*Lanterna esagonale E27 in stile classico, realizzata in resina antiurto, stabilizzata ai raggi UV, inattaccabile da ruggine e corrosione. Idonea per il montaggio a palo, a sospensione o a parete. Fornita anche completa di **lampadine LED a filamento** adatte ad uso in ambiente esterno, approvate TÜV, di lunga durata ed elevata efficienza. Classe di isolamento II, grado di protezione IP55.*



E22.110.F1R

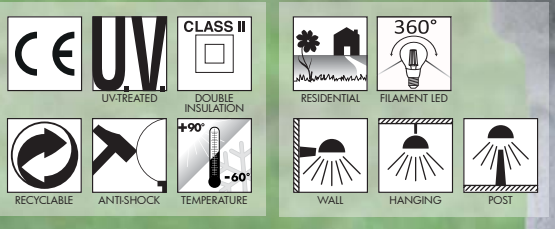

MADE IN ITALY

ANNA - LANTERN COMPONENTS

IP55



Decorative **PINNACLE** to be mounted on the roof top for post installation or on the lantern base for hanging installation.

***PINNACOLO** decorativo applicabile alla sommità del tetto (montaggio a palo) o sulla base della gabbia (montaggio a sospensione).*

Lantern **ROOF** made of shockproof resin material, UV rays stabilized and supplied with E27 lampholder. Tool-free opening for relamping and maintenance.

***TETTO** realizzato in resina antiurto, stabilizzata ai raggi UV, fornito completo di portalampada E27. Removibile senza l'ausilio di attrezzi per manutenzione e cambio lampadina.*

DIFFUSER made of UV stabilized polymethylmethacrylate (PMMA) resistant to yellowing process due to sun rays, available in clear or opal color and provided with recess for power cable supply. Made of one piece only and closed at the bottom to ensure high protection against external agents (**IP 55**).

***DIFFUSORE** in polimetilmetacrilato (PMMA) resistente al processo di ingiallimento dovuto ai raggi solari, disponibile in colore trasparente od opale e provvisto di scanalatura per il passaggio del cavo di alimentazione. Realizzato in un pezzo unico e con fondo chiuso per garantire un alto livello di protezione contro gli agenti esterni (**IP 55**).*

CAGE made of shockproof resin material, UV-rays stabilized, rust and corrosion-free.

***GABBIA** realizzata in resina antiurto, stabilizzata ai raggi UV, inattaccabile da ruggine e corrosione.*

ANNA

E22.000 *



Dimensions and weight
Height: 310 mm
Width: 220 mm
Depth: 192 mm
Weight: 1 Kg

Moulded colours:
Black *White*

Painted colours:
Antique green *Antique bronze*

Diffuser PMMA:
Clear *Opal*

E27 VERSIONS

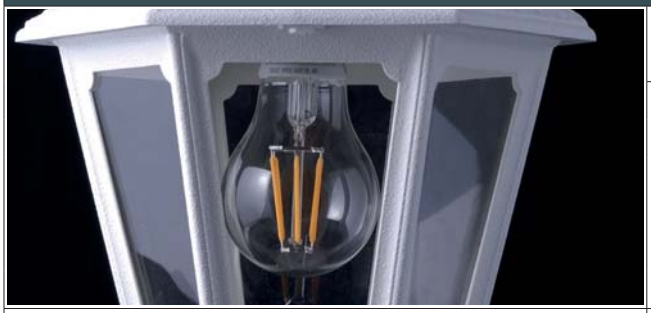

				*ADD. SUFFIX
E27 (CFL-LED)		max 160 mm		.E27
FILAMENT LED E27	6 W	800 Lm	4000 K	.F1L
			2700 K	.F1R
	8 W	1000 Lm	4000 K	.M1L
			2700 K	.M1R
	12 W	1500 Lm	4000 K	.N1L
			2700 K	.N1R

* ADD THESE SUFFIXES TO THE REFERENCES MENTIONED IN THE CATALOGUE

- **PERFECT MATCHING WITH CLASSIC LANTERNS**: clear LED filament lamp with the look and the feeling of a traditional incandescent bulb.
- **SUITABLE FOR OUTDOOR USE**: 100-240 V built-in driver fully protected against heat and humidity by silicone paste.
- **OMNIDIRECTIONAL LIGHT**: 360° light output for a better lighting distribution on hexagonal and square classic lanterns.
- **HIGH EFFICIENCY**: 90% energy saving.



6W 8W 12W = **60W 75W 100W** incandescent

SAVE 90%

LED LAMPS

More technical details about TÜV approved Fumagalli LED Lamps on page 512.

PHOTOMETRIC DATA SAMPLE

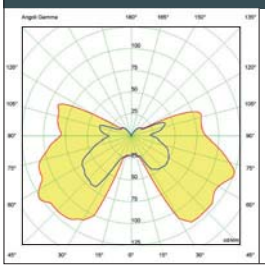

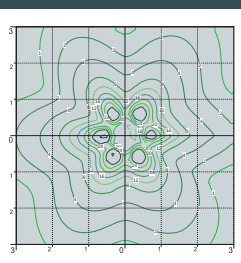

***ANNA** lantern clear with Fumagallli Filament Led Lamp 6W.*

POST height 1mt
6x6mt area: average 6 lux

The photometric data for all the versions are available upon request or on our website.

ANNA

SMALL SIZE







MADE IN ITALY

BISSO/ANNA

E27 lampholder	E22.131.E27
6W LED	E22.131.F1R
8W LED	E22.131.M1R
12W LED	E22.131.N1R

Pcs 18
Kg 21,2
mc 0,209

*2700K**

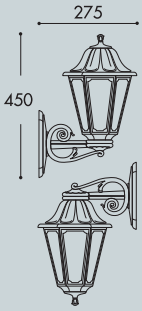

SICHEM/ANNA

E27 lampholder	E22.120.E27
6W LED	E22.120.F1R
8W LED	E22.120.M1R
12W LED	E22.120.N1R

Pcs 18
Kg 21,2
mc 0,209

*2700K**

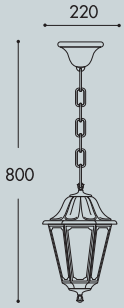

ANNA

E22.000

Pcs 1
Kg 1
mc 0,011



*TO ORDER THE 4000K VERSION, USE THE SUFFIXES
.F1L(6W) .M1L (8W) .N1L (12W)

MIKROLOT/ANNA

E27 lampholder	E22.110.E27
6W LED	E22.110.F1R
8W LED	E22.110.M1R
12W LED	E22.110.N1R

Pcs 18
Kg 21,2
mc 0,209

*2700K**



PORPORA/ANNA

E27 lampholder	E22.141.E27
6W LED	E22.141.F1R
8W LED	E22.141.M1R
12W LED	E22.141.N1R

Pcs 1
Kg 3,5
mc 0,024

*2700K**

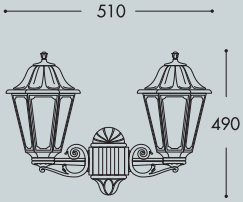

MIZAR/ANNA resin

E27 lampholder	E22.151.E27
6W LED	E22.151.F1R
8W LED	E22.151.M1R
12W LED	E22.151.N1R

Pcs 1
Kg 2,4
mc 0,044

*2700K**

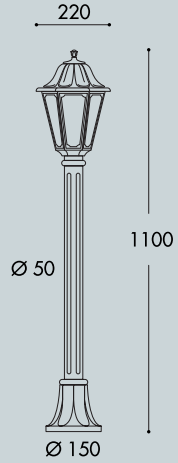

ALOE'.R/ANNA resin

E27 lampholder	E22.163.E27
6W LED	E22.163.F1R
8W LED	E22.163.M1R
12W LED	E22.163.N1R

Pcs 2
Kg 8
mc 0,121

*2700K**

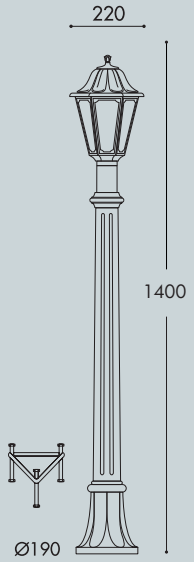

ARTU'/ANNA

E27 lampholder	E22.158.E27
6W LED	E22.158.F1R
8W LED	E22.158.M1R
12W LED	E22.158.N1R

Pcs 1
Kg 9
mc 0,148

*2700K**



ANNA

SMALL SIZE







MADE IN ITALY

ARTU' BISSO/ANNA 2+1

E27 lampholder	E22.158.S21.E27
6W LED	E22.158.S21.F1R
8W LED	E22.158.S21.M1R
12W LED	E22.158.S21.N1R

Pcs 1
Kg 12,1
mc 0,176

*2700K**

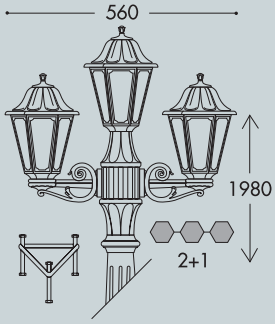

ARTU' BISSO/ANNA 3+1

E27 lampholder	E22.158.S31.E27
6W LED	E22.158.S31.F1R
8W LED	E22.158.S31.M1R
12W LED	E22.158.S31.N1R

Pcs 1
Kg 13,1
mc 0,176

*2700K**

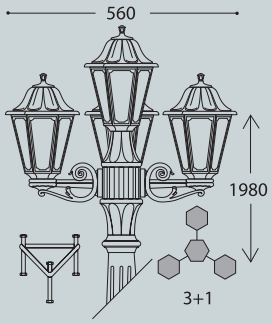

GIGI BISSO/ANNA 2+1

E27 lampholder	E22.156.S21.E27
6W LED	E22.156.S21.F1R
8W LED	E22.156.S21.M1R
12W LED	E22.156.S21.N1R

Pcs 1
Kg 14,1
mc 0,182

*2700K**

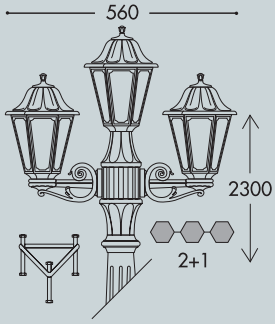

GIGI BISSO/ANNA 3+1

E27 lampholder	E22.156.S31.E27
6W LED	E22.156.S31.F1R
8W LED	E22.156.S31.M1R
12W LED	E22.156.S31.N1R

Pcs 1
Kg 15,1
mc 0,182

*2700K**

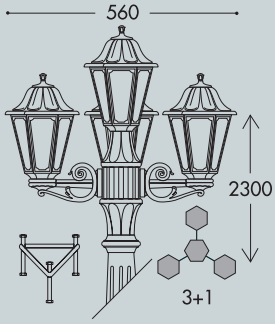

ARTU' BISSO/ANNA 2L

E27 lampholder	E22.158.S20.E27
6W LED	E22.158.S20.F1R
8W LED	E22.158.S20.M1R
12W LED	E22.158.S20.N1R

Pcs 1
Kg 11,1
mc 0,176

*2700K**

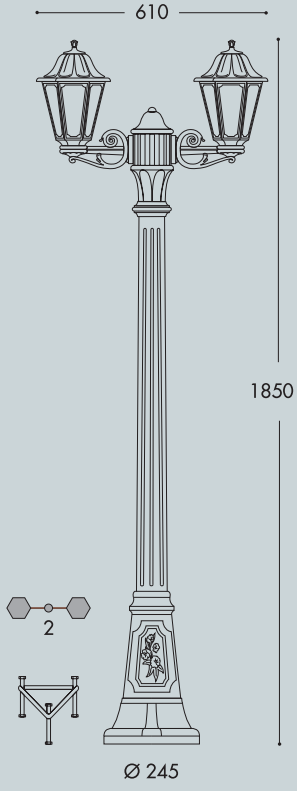

ARTU' BISSO/ANNA 3L

E27 lampholder	E22.158.S30.E27
6W LED	E22.158.S30.F1R
8W LED	E22.158.S30.M1R
12W LED	E22.158.S30.N1R

Pcs 1
Kg 12,1
mc 0,176

*2700K**

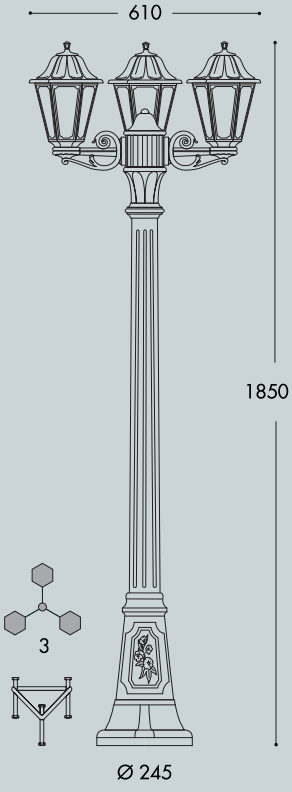

GIGI BISSO/ANNA 2L

E27 lampholder	E22.156.S20.E27
6W LED	E22.156.S20.F1R
8W LED	E22.156.S20.M1R
12W LED	E22.156.S20.N1R

Pcs 1
Kg 13,1
mc 0,182

*2700K**

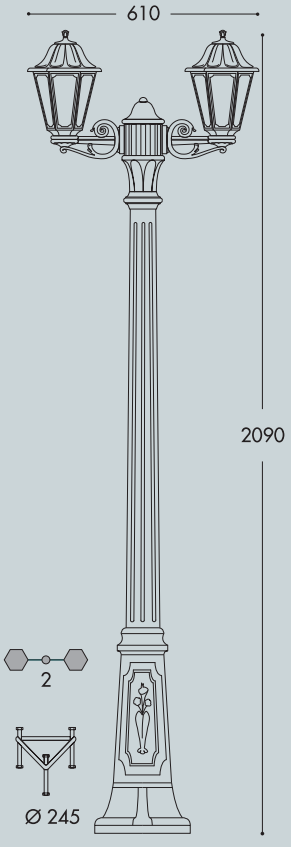

GIGI BISSO/ANNA 3L

E27 lampholder	E22.156.S30.E27
6W LED	E22.156.S30.F1R
8W LED	E22.156.S30.M1R
12W LED	E22.156.S30.N1R

Pcs 1
Kg 14,1
mc 0,182

*2700K**

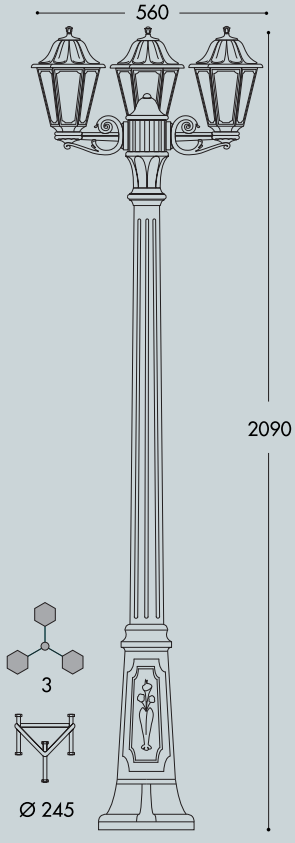

*TO ORDER THE 4000K VERSION, USE THE SUFFIXES .F1L(6W) .M1L (8W) .N1L (12W)

SABA

SMALL SIZE

E27 hexagonal lantern in classic style, made of shockproof resin material, UV-rays stabilized, rust and corrosion-free. Modular construction suitable for post top, hanging and wall installation. Supplied as optional with TÜV approved, long-life and efficient **LED filament lamps** suitable for outdoor use. Insulation class II, protection rating IP55.

*Lanterna esagonale E27 in stile classico, realizzata in resina antiurto, stabilizzata ai raggi UV, inattaccabile da ruggine e corrosione. Idonea per il montaggio a palo, a sospensione o a parete. Fornita anche completa di **lampadine LED a filamento** adatte ad uso in ambiente esterno, approvate TÜV, di lunga durata ed elevata efficienza. Classe di isolamento II, grado di protezione IP55.*

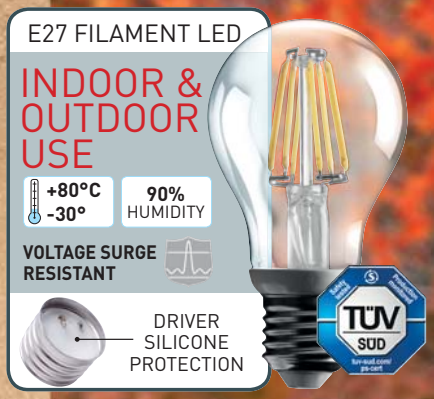

K22.131.F1R

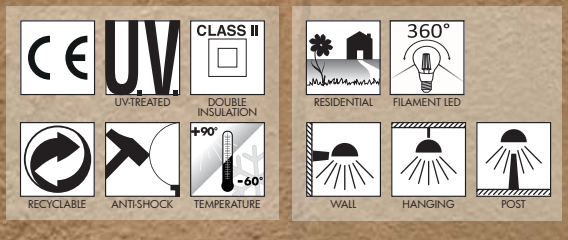

SABA - LANTERN COMPONENTS

IP55



Decorative **PINNACLE** to be mounted on the roof top for post installation or on the lantern base for hanging installation.

***PINNACOLO** decorativo applicabile alla sommità del tetto (montaggio a palo) o sulla base della gabbia (montaggio a sospensione).*



Lantern **ROOF** made of shockproof resin material, UV rays stabilized and supplied with E27 lampholder. Tool-free opening for relamping and maintenance,.

***TETTO** realizzato in resina antiurto, stabilizzata ai raggi UV, fornito completo di portalampada E27. Removibile senza l'ausilio di attrezzi per manutenzione e cambio lampadina.*



DIFFUSER made of UV stabilized polymethylmethacrylate (PMMA) resistant to yellowing process due to sun rays, available in clear or opal color and provided with recess for power cable supply. Made of one piece only and closed at the bottom to ensure high protection against external agents (**IP 55**).

***DIFFUSORE** in polimetilmetacrilato (PMMA) resistente al processo di ingiallimento dovuto ai raggi solari, disponibile in colore trasparente od opale e provvisto di scanalatura per il passaggio del cavo di alimentazione. Realizzato in un pezzo unico e con fondo chiuso per garantire un alto livello di protezione contro gli agenti esterni (**IP 55**).*

CAGE made of shockproof resin material, UV-rays stabilized, rust and corrosion-free.

***GABBIA** realizzata in resina antiurto, stabilizzata ai raggi UV, inattaccabile da ruggine e corrosione.*

SABA

K22.000 *



Dimensions and weight
Height: 320 mm
Width: 220 mm
Depth: 192 mm
Weight: 1 Kg

Moulded colours:
Black, White

Painted colours:
Antique green, Antique bronze

Diffuser PMMA:
Clear, Opal

E27 VERSIONS

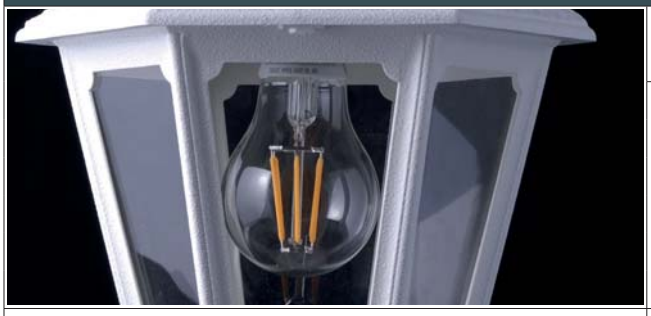

				*ADD. SUFFIX
E27 (CFL-LED)		max 160 mm		.E27
FILAMENT LED E27	6 W	800 Lm	4000 K	.F1L
			2700 K	.F1R
	8 W	1000 Lm	4000 K	.M1L
			2700 K	.M1R
	12 W	1500 Lm	4000 K	.N1L
			2700 K	.N1R

- **PERFECT MATCHING WITH CLASSIC LANTERNS**: clear LED filament lamp with the look and the feeling of a traditional incandescent bulb.
- **SUITABLE FOR OUTDOOR USE**: 100-240 V built-in driver fully protected against heat and humidity by silicone paste.
- **OMNIDIRECTIONAL LIGHT**: 360° light output for a better lighting distribution on hexagonal and square classic lanterns.
- **HIGH EFFICIENCY**: 90% energy saving.



6W 8W 12W = **60W 75W 100W** incandescent

SAVE 90%

LED LAMPS

More technical details about TÜV approved Fumagalli LED Lamps on page 512.

** ADD THESE SUFFIXES TO THE REFERENCES MENTIONED IN THE CATALOGUE*

PHOTOMETRIC DATA SAMPLE

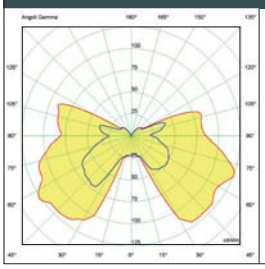

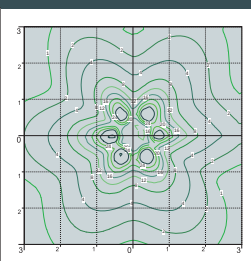

***SABA** lantern clear with Fumagallli Filament Led Lamp 6W.*

POST height 1mt
6x6mt area: average 6 lux

The photometric data for all the versions are available upon request or on our website.

SABA

SMALL SIZE



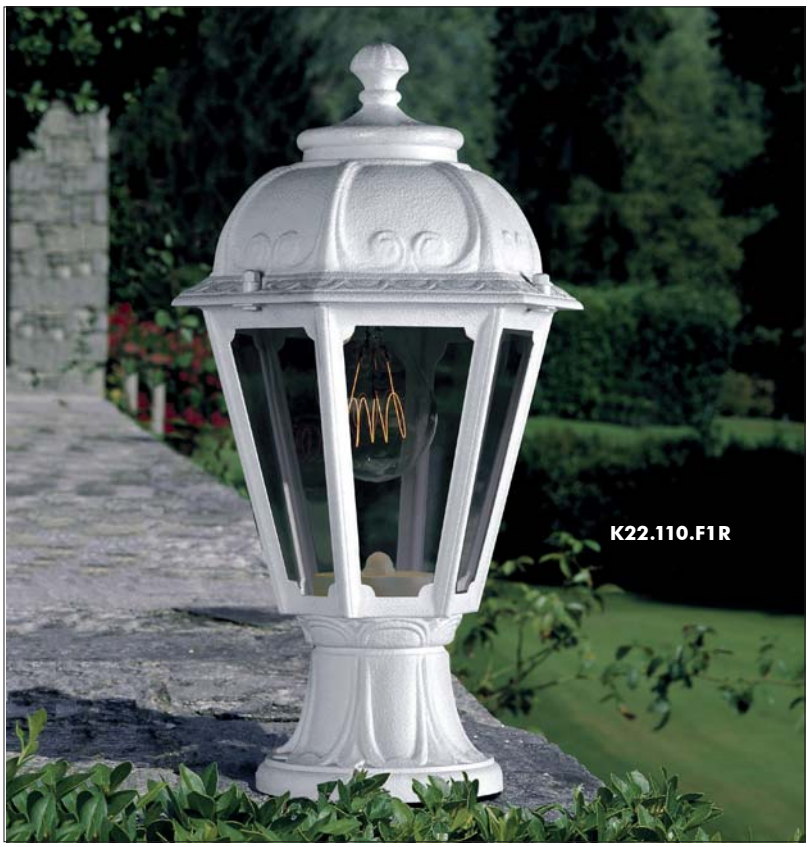



MADE IN ITALY

BISSO/SABA

E27 lampholder	K22.131.E27
6W LED	K22.131.F1R
8W LED	K22.131.M1R
12W LED	K22.131.N1R

Pcs 18
Kg 21,2
mc 0,209

*2700K**

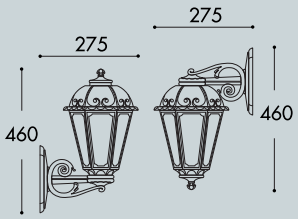

SICHEM/SABA

E27 lampholder	K22.120.E27
6W LED	K22.120.F1R
8W LED	K22.120.M1R
12W LED	K22.120.N1R

Pcs 18
Kg 21,2
mc 0,209

*2700K**

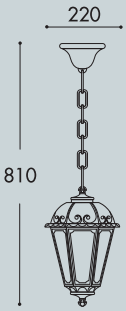

SABA

K22.000

Pcs 1
Kg 1
mc 0,011



*TO ORDER THE 4000K VERSION, USE THE SUFFIXES
.F1L(6W) .M1L (8W) .N1L (12W)

MIKROLOT/SABA

E27 lampholder	K22.110.E27
6W LED	K22.110.F1R
8W LED	K22.110.M1R
12W LED	K22.110.N1R

Pcs 18
Kg 21,2
mc 0,209

*2700K**

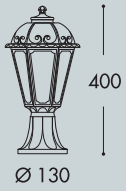

PORPORA/SABA

E27 lampholder	K22.141.E27
6W LED	K22.141.F1R
8W LED	K22.141.M1R
12W LED	K22.141.N1R

Pcs 1
Kg 3,5
mc 0,024

*2700K**

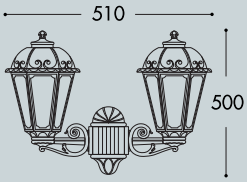

MIZAR/SABA resin

E27 lampholder	K22.151.E27
6W LED	K22.151.F1R
8W LED	K22.151.M1R
12W LED	K22.151.N1R

Pcs 1
Kg 2,4
mc 0,044

*2700K**

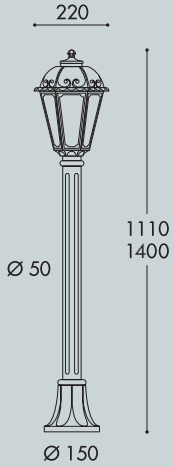

ALOE'.R/SABA resin

E27 lampholder	K22.163.E27
6W LED	K22.163.F1R
8W LED	K22.163.M1R
12W LED	K22.163.N1R

Pcs 2
Kg 8
mc 0,121

*2700K**

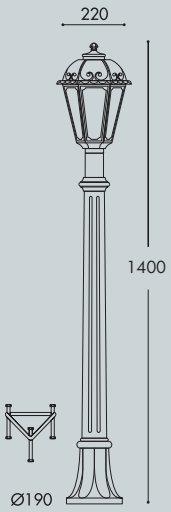

ARTU'/SABA

E27 lampholder	K22.158.E27
6W LED	K22.158.F1R
8W LED	K22.158.M1R
12W LED	K22.158.N1R

Pcs 1
Kg 9
mc 0,148

*2700K**



*TO ORDER THE 4000K VERSION, USE THE SUFFIXES .F1L(6W) .M1L (8W) .N1L (12W)

SABA

SMALL SIZE







MADE IN ITALY



ARTU' BISSO/SABA 2+1

E27 lampholder	K22.158.S21.E27
6W LED	K22.158.S21.F1R
8W LED	K22.158.S21.M1R
12W LED	K22.158.S21.N1R

Pcs 1
Kg 12,1
mc 0,176

*2700K**

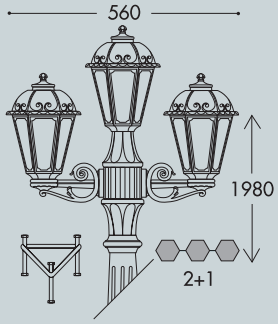

ARTU' BISSO/SABA 3+1

E27 lampholder	K22.158.S31.E27
6W LED	K22.158.S31.F1R
8W LED	K22.158.S31.M1R
12W LED	K22.158.S31.N1R

Pcs 1
Kg 13,1
mc 0,176

*2700K**

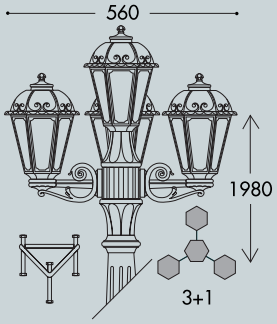

GIGI BISSO/SABA 2+1

E27 lampholder	K22.156.S21.E27
6W LED	K22.156.S21.F1R
8W LED	K22.156.S21.M1R
12W LED	K22.156.S21.N1R

Pcs 1
Kg 14,1
mc 0,182

*2700K**

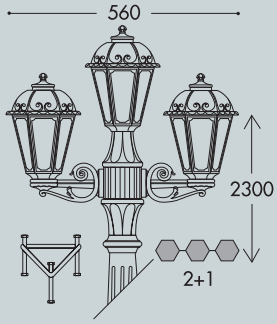

GIGI BISSO/SABA 3+1

E27 lampholder	K22.156.S31.E27
6W LED	K22.156.S31.F1R
8W LED	K22.156.S31.M1R
12W LED	K22.156.S31.N1R

Pcs 1
Kg 15,1
mc 0,182

*2700K**

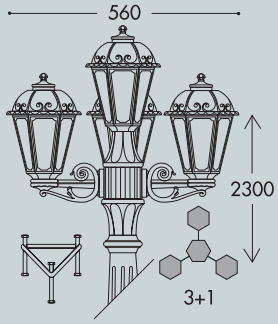

ARTU' BISSO/SABA 2L

E27 lampholder	K22.158.S20.E27
6W LED	K22.158.S20.F1R
8W LED	K22.158.S20.M1R
12W LED	K22.158.S20.N1R

Pcs 1
Kg 11,1
mc 0,176

*2700K**

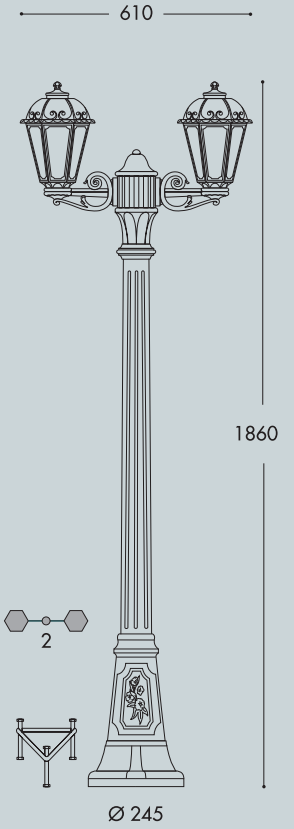

ARTU' BISSO/SABA 3L

E27 lampholder	K22.158.S30.E27
6W LED	K22.158.S30.F1R
8W LED	K22.158.S30.M1R
12W LED	K22.158.S30.N1R

Pcs 1
Kg 12,1
mc 0,176

*2700K**

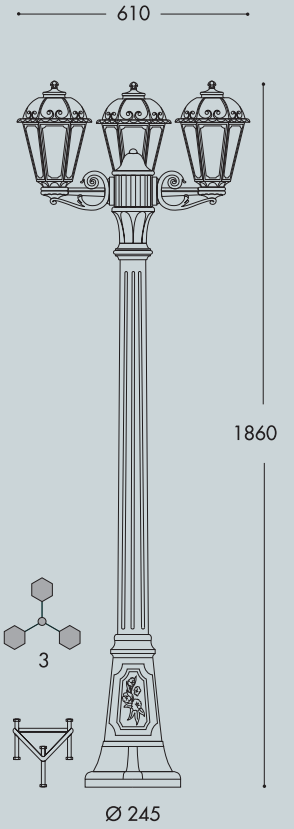

GIGI BISSO/SABA 2L

E27 lampholder	K22.156.S20.E27
6W LED	K22.156.S20.F1R
8W LED	K22.156.S20.M1R
12W LED	K22.156.S20.N1R

Pcs 1
Kg 13,1
mc 0,182

*2700K**

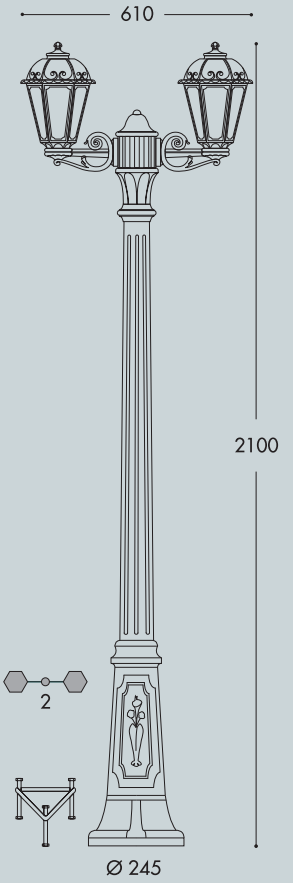

GIGI BISSO/SABA 3L

E27 lampholder	K22.156.S30.E27
6W LED	K22.156.S30.F1R
8W LED	K22.156.S30.M1R
12W LED	K22.156.S30.N1R

Pcs 1
Kg 14,1
mc 0,182

*2700K**

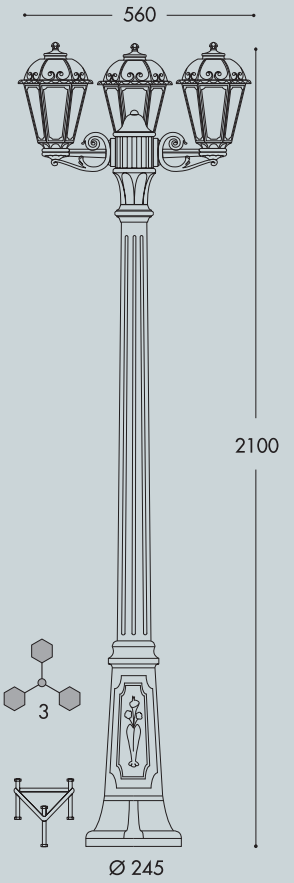

*TO ORDER THE 4000K VERSION, USE THE SUFFIXES .F1L(6W) .M1L (8W) .N1L (12W)

RUT

MEDIUM SIZE

E27 hexagonal lantern in classic style, made of shockproof resin material, UV-rays stabilized, rust and corrosion-free. Modular construction suitable for post top, hanging and wall installation. Supplied as optional with TÜV approved, long-life and efficient **LED filament lamps** suitable for outdoor use. Insulation class II, protection rating IP55.

*Lanterna esagonale E27 in stile classico, realizzata in resina antiurto, stabilizzata ai raggi UV, inattaccabile da ruggine e corrosione. Idonea per il montaggio a palo, a sospensione o a parete. Fornita anche completa di **lampadine LED a filamento** adatte ad uso in ambiente esterno, approvate TÜV, di lunga durata ed elevata efficienza. Classe di isolamento II, grado di protezione IP55.*



E26.110.M1R

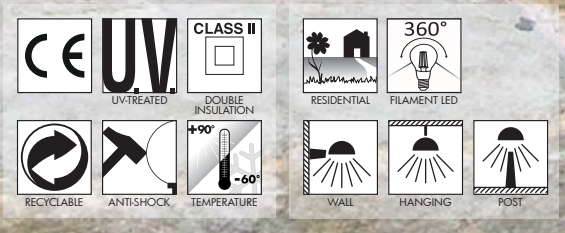

MADE IN ITALY

RUT - LANTERN COMPONENTS

IP55



Decorative **PINNACLE** to be mounted on the roof top for post installation or on the lantern base for hanging installation.

PINNACOLO *decorativo applicabile alla sommità del tetto (montaggio a palo) o sulla base della gabbia (montaggio a sospensione).*



Lantern **ROOF** made of shockproof resin material, UV rays stabilized and supplied with E27 lampholder. Tool-free opening for relamping and maintenance.

TETTO *realizzato in resina antiurto, stabilizzata ai raggi UV, fornito completo di portalampada E27. Removibile senza l'ausilio di attrezzi per manutenzione e cambio lampadina.*



DIFFUSER made of UV stabilized polymethylmethacrylate (PMMA) resistant to yellowing process due to sun rays, available in clear or opal color and provided with recess for power cable supply. Made of one piece only and closed at the bottom to ensure high protection against external agents (**IP 55**).

DIFFUSORE *in polimetilmetacrilato (PMMA) resistente al processo di ingiallimento dovuto ai raggi solari, disponibile in colore trasparente od opale e provvisto di scanalatura per il passaggio del cavo di alimentazione. Realizzato in un pezzo unico e con fondo chiuso per garantire un alto livello di protezione contro gli agenti esterni (**IP 55**).*

CAGE made of shockproof resin material, UV-rays stabilized, rust and corrosion-free.

GABBIA *realizzata in resina antiurto, stabilizzata ai raggi UV, inattaccabile da ruggine e corrosione.*

RUT

E26.000 *



Dimensions and weight
Height: 410 mm
Width: 260 mm
Depth: 227 mm
Weight: 1,3 Kg

Moulded colours:
Black White

Painted colours:
Antique green Antique bronze

Diffuser PMMA:
Clear Opal

E27 VERSIONS

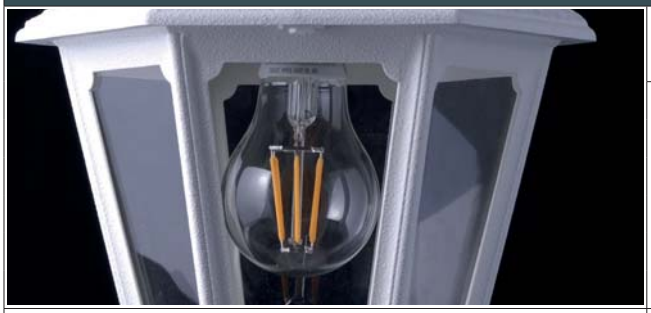

				*ADD. SUFFIX
E27 (CFL-LED)		max 160 mm		.E27
FILAMENT LED E27	6 W	800 Lm	4000 K	.F1L
			2700 K	.F1R
	8 W	1000 Lm	4000 K	.M1L
			2700 K	.M1R
	12 W	1500 Lm	4000 K	.N1L
			2700 K	.N1R

- **PERFECT MATCHING WITH CLASSIC LANTERNS**: clear LED filament lamp with the look and the feeling of a traditional incandescent bulb.
- **SUITABLE FOR OUTDOOR USE**: 100-240 V built-in driver fully protected against heat and humidity by silicone paste.
- **OMNIDIRECTIONAL LIGHT**: 360° light output for a better lighting distribution on hexagonal and square classic lanterns.
- **HIGH EFFICIENCY**: 90% energy saving.



6W 8W 12W = **60W 75W 100W** incandescent

SAVE 90%

LED LAMPS

More technical details about TÜV approved Fumagalli LED Lamps on page 512.

** ADD THESE SUFFIXES TO THE REFERENCES MENTIONED IN THE CATALOGUE*

PHOTOMETRIC DATA SAMPLE

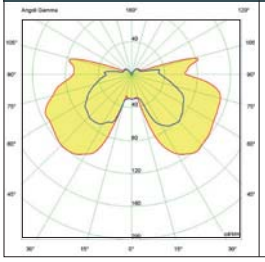

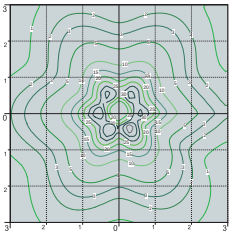

RUT *lantern clear with Fumagallli Filament Led Lamp 8W.*

POST height 2mt
6x6mt area: average 6 lux

The photometric data for all the versions are available upon request or on our website.

RUT

MEDIUM SIZE

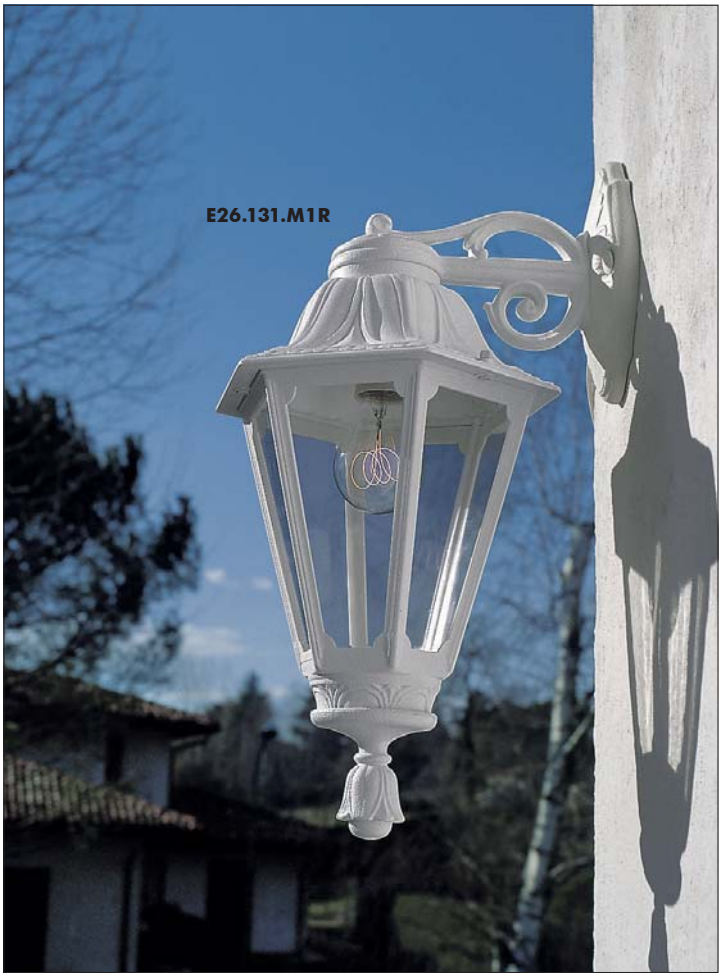





BISSO/RUT

E27 lampholder	E26.131.E27
6W LED	E26.131.F1R
8W LED	E26.131.M1R
12W LED	E26.131.N1R

Pcs 12
Kg 19
mc 0,225

*2700K**

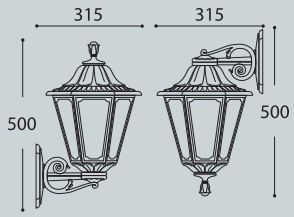

SICHEM/RUT

E27 lampholder	E26.120.E27
6W LED	E26.120.F1R
8W LED	E26.120.M1R
12W LED	E26.120.N1R

Pcs 12
Kg 19
mc 0,225

*2700K**

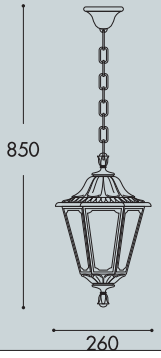

RUT

E26.000

Pcs 1
Kg 1,3
mc 0,018



*TO ORDER THE 4000K VERSION, USE THE SUFFIXES
.F1L(6W) .M1L (8W) .N1L (12W)

MINILOT/RUT

E27 lampholder	E26.111.E27
6W LED	E26.111.F1R
8W LED	E26.111.M1R
12W LED	E26.111.N1R

Pcs 12
Kg 19
mc 0,225

*2700K**

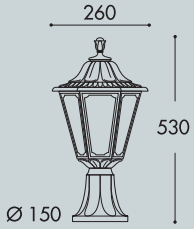

PORPORA/RUT

E27 lampholder	E26.141.E27
6W LED	E26.141.F1R
8W LED	E26.141.M1R
12W LED	E26.141.N1R

Pcs 1
Kg 4
mc 0,034

*2700K**

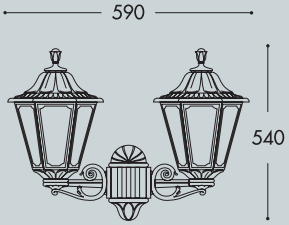

IAFET/RUT resin

E27 lampholder	E26.162.E27
6W LED	E26.162.F1R
8W LED	E26.162.M1R
12W LED	E26.162.N1R

Pcs 2
Kg 7,9
mc 0,086

*2700K**

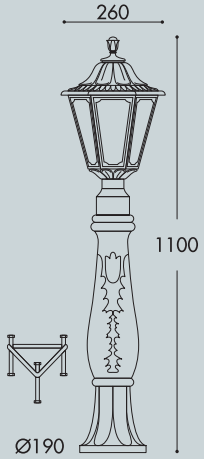

MIZAR/RUT resin

E27 lampholder	E26.151.E27
6W LED	E26.151.F1R
8W LED	E26.151.M1R
12W LED	E26.151.N1R

Pcs 1
Kg 3
mc 0,07

*2700K**

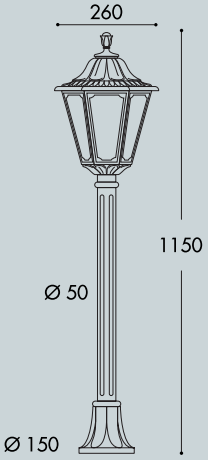

ALOE'.R/RUT resin

E27 lampholder	E26.163.E27
6W LED	E26.163.F1R
8W LED	E26.163.M1R
12W LED	E26.163.N1R

Pcs 2
Kg 8,6
mc 0,121

*2700K**

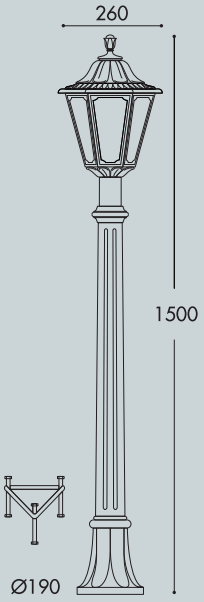

ARTU'/RUT

E27 lampholder	E26.158.E27
6W LED	E26.158.F1R
8W LED	E26.158.M1R
12W LED	E26.158.N1R

Pcs 1
Kg 9,6
mc 0,148

*2700K**

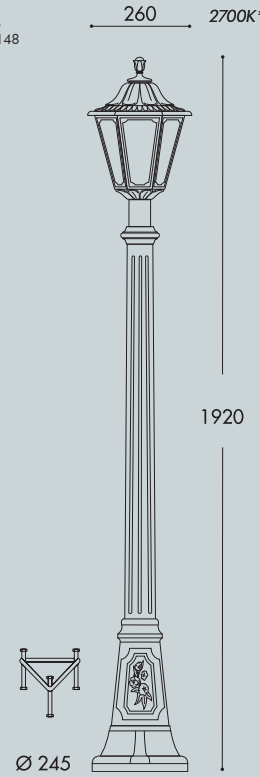

RUT

MEDIUM SIZE







MADE IN ITALY

RICU BISSO/RUT 2+1	
E27 lampholder	E26.157.S21.E27
6W LED	E26.157.S21.F1R
8W LED	E26.157.S21.M1R
12W LED	E26.157.S21.N1R

Pcs 1
Kg 15,2
mc 0,214

*2700K**

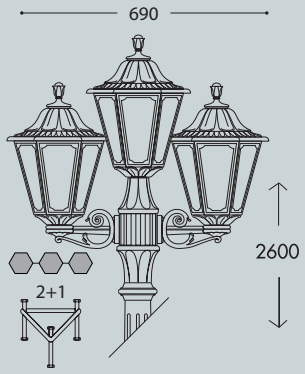

RICU BISSO/RUT 3+1	
E27 lampholder	E26.157.S31.E27
6W LED	E26.157.S31.F1R
8W LED	E26.157.S31.M1R
12W LED	E26.157.S31.N1R

Pcs 1
Kg 16,5
mc 0,214

*2700K**

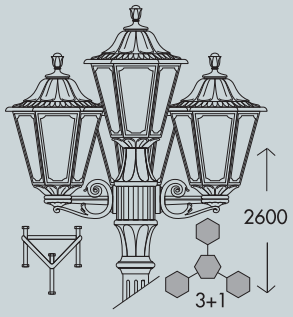

GIGI/RUT	
E27 lampholder	E26.156.E27
6W LED	E26.156.F1R
8W LED	E26.156.M1R
12W LED	E26.156.N1R

Pcs 1
Kg 10,9
mc 0,172

*2700K**



RICU/RUT	
E27 lampholder	E26.157.E27
6W LED	E26.157.F1R
8W LED	E26.157.M1R
12W LED	E26.157.N1R

Pcs 1
Kg 11,7
mc 0,18

*2700K**



RICU BISSO/RUT 2L	
E27 lampholder	E26.157.S20.E27
6W LED	E26.157.S20.F1R
8W LED	E26.157.S20.M1R
12W LED	E26.157.S20.N1R

Pcs 1
Kg 14,2
mc 0,214

*2700K**

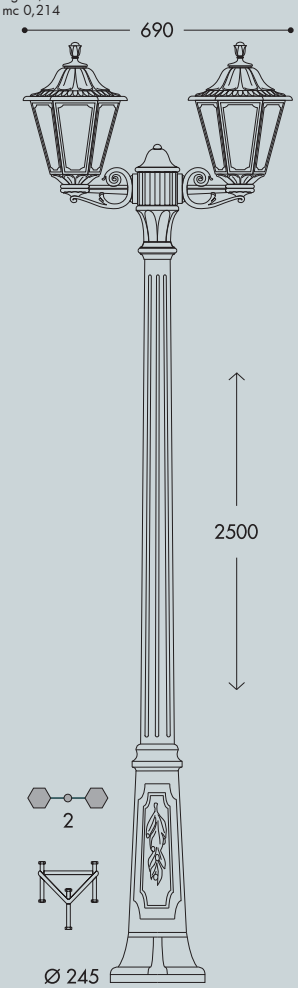

RICU BISSO/RUT 3L	
E27 lampholder	E26.157.S30.E27
6W LED	E26.157.S30.F1R
8W LED	E26.157.S30.M1R
12W LED	E26.157.S30.N1R

Pcs 1
Kg 15,2
mc 0,214

*2700K**

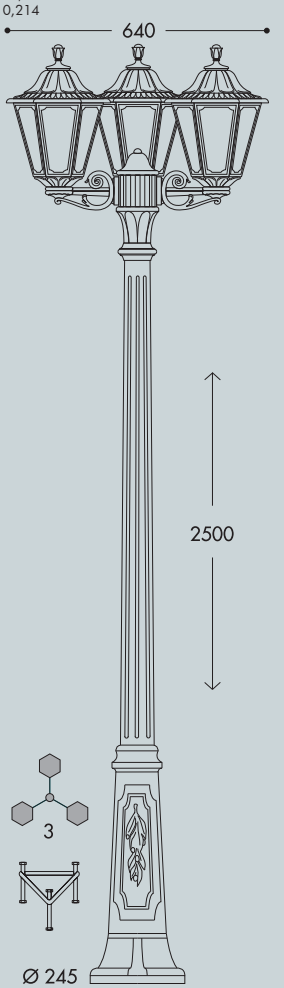

*TO ORDER THE 4000K VERSION, USE THE SUFFIXES .F1L(6W) .M1L (8W) .N1L (12W)

SALEM

MEDIUM SIZE

E27 hexagonal lantern in classic style, made of shockproof resin material, UV-rays stabilized, rust and corrosion-free. Modular construction suitable for post top, hanging and wall installation. Supplied as optional with TÜV approved, long-life and efficient **LED filament lamps** suitable for outdoor use. Insulation class II, protection rating IP55.

*Lanterna esagonale E27 in stile classico, realizzata in resina antiurto, stabilizzata ai raggi UV, inattaccabile da ruggine e corrosione. Idonea per il montaggio a palo, a sospensione o a parete. Fornita anche completa di **lampadine LED a filamento** adatte ad uso in ambiente esterno, approvate TÜV, di lunga durata ed elevata efficienza. Classe di isolamento II, grado di protezione IP55.*



K26.111.M1R

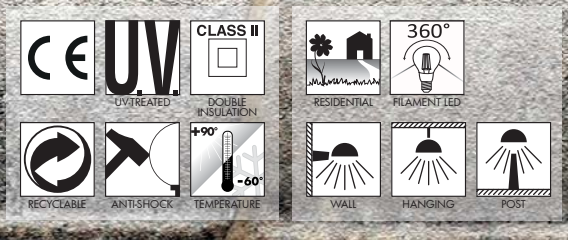

MADE IN ITALY

SALEM - LANTERN COMPONENTS

IP55





Decorative **PINNACLE** to be mounted on the roof top for post installation or on the lantern base for hanging installation.

***PINNACOLO** decorativo applicabile alla sommità del tetto (montaggio a palo) o sulla base della gabbia (montaggio a sospensione).*

Lantern **ROOF** made of shockproof resin material, UV rays stabilized and supplied with E27 lampholder. Tool-free opening for relamping and maintenance,.

***TETTO** realizzato in resina antiurto, stabilizzata ai raggi UV, fornito completo di portalampada E27. Removibile senza l'ausilio di attrezzi per manutenzione e cambio lampadina.*



DIFFUSER made of UV stabilized polymethylmethacrylate (PMMA) resistant to yellowing process due to sun rays, available in clear or opal color and provided with recess for power cable supply. Made of one piece only and closed at the bottom to ensure high protection against external agents (**IP 55**).

***DIFFUSORE** in polimetilmetacrilato (PMMA) resistente al processo di ingiallimento dovuto ai raggi solari, disponibile in colore trasparente od opale e provvisto di scanalatura per il passaggio del cavo di alimentazione. Realizzato in un pezzo unico e con fondo chiuso per garantire un alto livello di protezione contro gli agenti esterni (**IP 55**).*

CAGE made of shockproof resin material, UV-rays stabilized, rust and corrosion-free.

***GABBIA** realizzata in resina antiurto, stabilizzata ai raggi UV, inattaccabile da ruggine e corrosione.*

SALEM

K26.000 *



Dimensions and weight
Height: 410 mm
Width: 260 mm
Depth: 227 mm
Weight: 1,3 Kg

Moulded colours:
Black, White

Painted colours:
Antique green, Antique bronze

Diffuser PMMA:
Clear, Opal

E27 VERSIONS

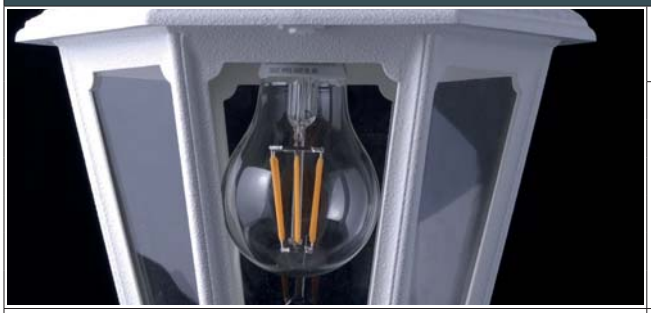

E27 (CFL-LED)		max 160 mm		*ADD. SUFFIX
				.E27
FILAMENT LED E27	6 W	800 Lm	4000 K	.F1L
			2700 K	.F1R
	8 W	1000 Lm	4000 K	.M1L
			2700 K	.M1R
	12 W	1500 Lm	4000 K	.N1L
			2700 K	.N1R

- **PERFECT MATCHING WITH CLASSIC LANTERNS**: clear LED filament lamp with the look and the feeling of a traditional incandescent bulb.
- **SUITABLE FOR OUTDOOR USE**: 100-240 V built-in driver fully protected against heat and humidity by silicone paste.
- **OMNIDIRECTIONAL LIGHT**: 360° light output for a better lighting distribution on hexagonal and square classic lanterns.
- **HIGH EFFICIENCY**: 90% energy saving.



6W 8W 12W = **60W 75W 100W** incandescent

SAVE 90%

LED LAMPS

More technical details about TÜV approved Fumagalli LED Lamps on page 512.

** ADD THESE SUFFIXES TO THE REFERENCES MENTIONED IN THE CATALOGUE*

PHOTOMETRIC DATA SAMPLE

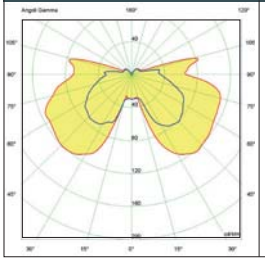

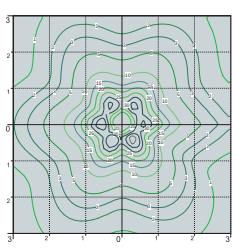

***SALEM** lantern clear with Fumagallli Filament Led Lamp 8W.*

POST height 2mt
6x6mt area: average 6 lux

The photometric data for all the versions are available upon request or on our website.

SALEM

MEDIUM SIZE







MADE IN ITALY

BISSO/SALEM

E27 lampholder	K26.131.E27
6W LED	K26.131.F1R
8W LED	K26.131.M1R
12W LED	K26.131.N1R

Pcs 12
Kg 19
mc 0,225

*2700K**

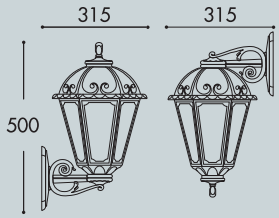

SICHEM/SALEM

E27 lampholder	K26.120.E27
6W LED	K26.120.F1R
8W LED	K26.120.M1R
12W LED	K26.120.N1R

Pcs 12
Kg 19
mc 0,225

*2700K**

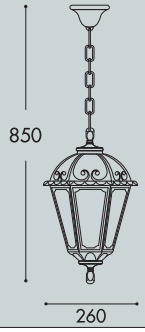

SALEM

K26.000

Pcs 1
Kg 1,3
mc 0,018



*TO ORDER THE 4000K VERSION, USE THE SUFFIXES
.F1L(6W) .M1L (8W) .N1L (12W)

MINILOT/SALEM

E27 lampholder	K26.111.E27
6W LED	K26.111.F1R
8W LED	K26.111.M1R
12W LED	K26.111.N1R

Pcs 12
Kg 19
mc 0,225

*2700K**

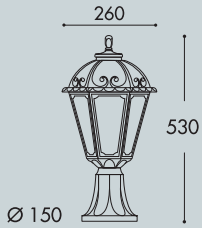

PORPORA/SALEM

E27 lampholder	K26.141.E27
6W LED	K26.141.F1R
8W LED	K26.141.M1R
12W LED	K26.141.N1R

Pcs 1
Kg 4
mc 0,034

*2700K**

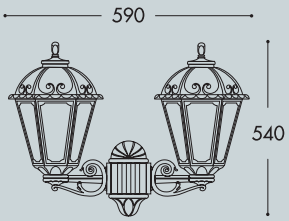

IAFET/SALEM resin

E27 lampholder	K26.162.E27
6W LED	K26.162.F1R
8W LED	K26.162.M1R
12W LED	K26.162.N1R

Pcs 2
Kg 7,9
mc 0,086

*2700K**

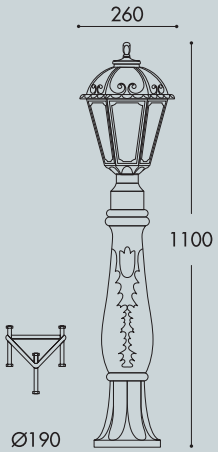

MIZAR/SALEM resin

E27 lampholder	K26.151.E27
6W LED	K26.151.F1R
8W LED	K26.151.M1R
12W LED	K26.151.N1R

Pcs 1
Kg 3
mc 0,07

*2700K**

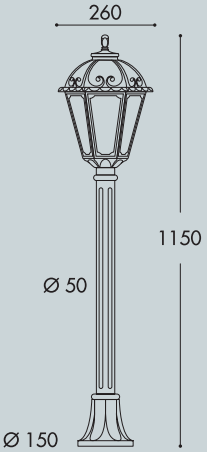

ALOE'.R/SALEM resin

E27 lampholder	K26.163.E27
6W LED	K26.163.F1R
8W LED	K26.163.M1R
12W LED	K26.163.N1R

Pcs 2
Kg 8,6
mc 0,121

*2700K**

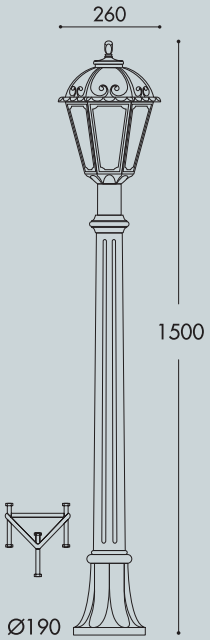

ARTU'/SALEM

E27 lampholder	K26.158.E27
6W LED	K26.158.F1R
8W LED	K26.158.M1R
12W LED	K26.158.N1R

Pcs 1
Kg 9,6
mc 0,148

*2700K**

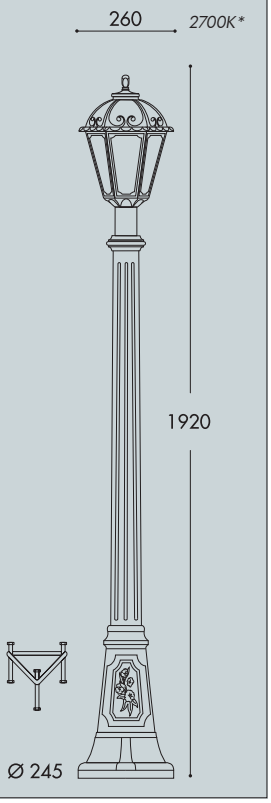

SALEM

MEDIUM SIZE







MADE IN ITALY

RICU BISSO/SALEM 2+1	
E27 lampholder	K26.157.S21.E27
6W LED	K26.157.S21.F1R
8W LED	K26.157.S21.M1R
12W LED	K26.157.S21.N1R

Pcs 1
Kg 13
mc 0,214

*2700K**

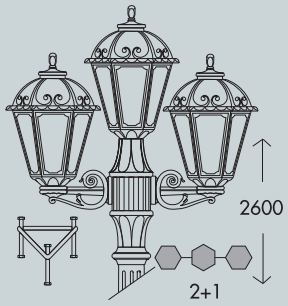

RICU BISSO/SALEM 3+1	
E27 lampholder	K26.157.S31.E27
6W LED	K26.157.S31.F1R
8W LED	K26.157.S31.M1R
12W LED	K26.157.S31.N1R

Pcs 1
Kg 14,3
mc 0,214

*2700K**

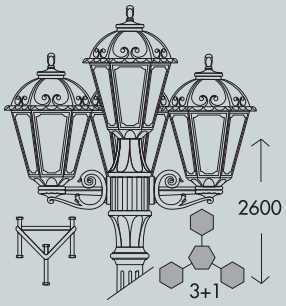

GIGI/SALEM	
E27 lampholder	K26.156.E27
6W LED	K26.156.F1R
8W LED	K26.156.M1R
12W LED	K26.156.N1R

Pcs 1
Kg 10,9
mc 0,172

*2700K**

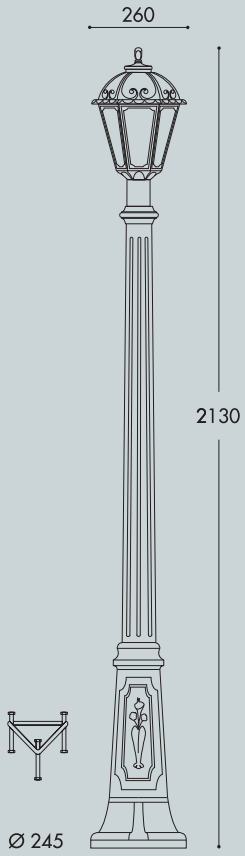

RICU/SALEM	
E27 lampholder	K26.157.E27
6W LED	K26.157.F1R
8W LED	K26.157.M1R
12W LED	K26.157.N1R

Pcs 1
Kg 11,7
mc 0,18

*2700K**

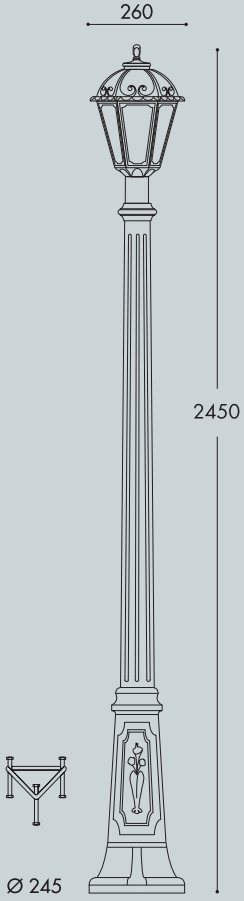

RICU BISSO/SALEM 2L	
E27 lampholder	K26.157.S20.E27
6W LED	K26.157.S20.F1R
8W LED	K26.157.S20.M1R
12W LED	K26.157.S20.N1R

Pcs 1
Kg 14,2
mc 0,214

*2700K**

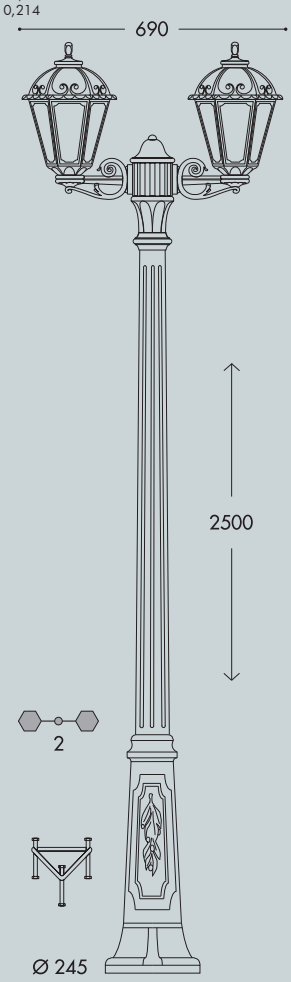

RICU BISSO/SALEM 3L	
E27 lampholder	K26.157.S30.E27
6W LED	K26.157.S30.F1R
8W LED	K26.157.S30.M1R
12W LED	K26.157.S30.N1R

Pcs 1
Kg 15,2
mc 0,214

*2700K**

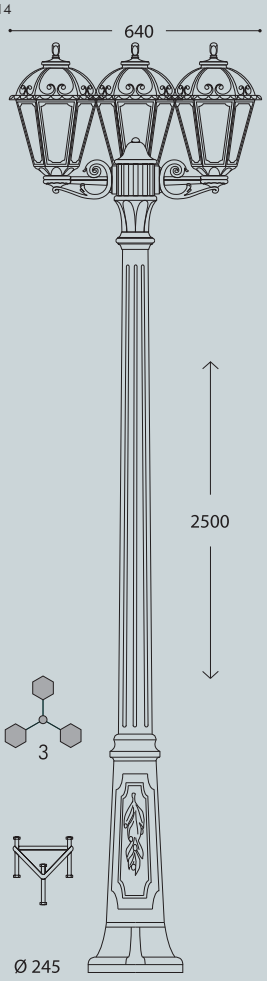

*TO ORDER THE 4000K VERSION, USE THE SUFFIXES .F1L(6W) .M1L (8W) .N1L (12W)

GOLIA

MEDIUM SIZE

E27 square lantern in classic style, made of shockproof resin material, UV-rays stabilized, rust and corrosion-free. Modular construction suitable for post top, hanging and wall installation. Supplied as optional with TÜV approved, long-life and efficient **LED filament lamps** suitable for outdoor use. Insulation class II, protection rating IP55.

*Lanterna quadra E27 in stile classico, realizzata in resina antiurto, stabilizzata ai raggi UV, inattaccabile da ruggine e corrosione. Idonea per il montaggio a palo, a sospensione o a parete. Fornita anche completa di **lampadine LED a filamento** adatte ad uso in ambiente esterno, approvate TÜV, di lunga durata ed elevata efficienza. Classe di isolamento II, grado di protezione IP55.*





Q23.131.M1R

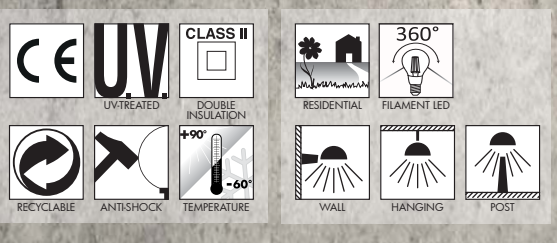

MADE IN ITALY

GOLIA - LANTERN COMPONENTS

IP55



Decorative **PINNACLE** to be mounted on the roof top for post installation or on the lantern base for hanging installation.

PINNACOLO *decorativo applicabile alla sommità del tetto (montaggio a palo) o sulla base della gabbia (montaggio a sospensione).*



Lantern **ROOF** made of shockproof resin material, UV rays stabilized and supplied with E27 lampholder. Tool-free opening for relamping and maintenance.

TETTO *realizzato in resina antiurto, stabilizzata ai raggi UV, fornito completo di portalampada E27. Removibile senza l'ausilio di attrezzi per manutenzione e cambio lampadina.*



DIFFUSER made of UV stabilized polymethylmethacrylate (PMMA) resistant to yellowing process due to sun rays, available in clear or opal color and provided with recess for power cable supply. Made of one piece only and closed at the bottom to ensure high protection against external agents (**IP 55**).

DIFFUSORE *in polimetilmetacrilato (PMMA) resistente al processo di ingiallimento dovuto ai raggi solari, disponibile in colore trasparente od opale e provvisto di scanalatura per il passaggio del cavo di alimentazione. Realizzato in un pezzo unico e con fondo chiuso per garantire un alto livello di protezione contro gli agenti esterni (**IP 55**).*

CAGE made of shockproof resin material, UV-rays stabilized, rust and corrosion-free.

GABBIA *realizzata in resina antiurto, stabilizzata ai raggi UV, inattaccabile da ruggine e corrosione.*

GOLIA

Q23.000 *



Dimensions and weight
Height: 360 mm
Width: 230 mm
Depth: 230 mm
Weight: 1,3 Kg

Moulded colours:
Black *White*

Painted colours:
Antique green *Antique bronze*

Diffuser PMMA:
Clear *Opal*

E27 VERSIONS



E27 (CFL-LED)		max 160 mm		*ADD. SUFFIX
FILAMENT LED E27	6 W	800 Lm	4000 K	.F1L
			2700 K	.F1R
	8 W	1000 Lm	4000 K	.M1L
			2700 K	.M1R
	12 W	1500 Lm	4000 K	.N1L
			2700 K	.N1R

- **PERFECT MATCHING WITH CLASSIC LANTERNS**: clear LED filament lamp with the look and the feeling of a traditional incandescent bulb.
- **SUITABLE FOR OUTDOOR USE**: 100-240 V built-in driver fully protected against heat and humidity by silicone paste.
- **OMNIDIRECTIONAL LIGHT**: 360° light output for a better lighting distribution on hexagonal and square classic lanterns.
- **HIGH EFFICIENCY**: 90% energy saving.



6W 8W 12W = **60W 75W 100W** incandescent

SAVE 90%

LED LAMPS

More technical details about TÜV approved Fumagalli LED Lamps on page 512.

** ADD THESE SUFFIXES TO THE REFERENCES MENTIONED IN THE CATALOGUE*

PHOTOMETRIC DATA SAMPLE

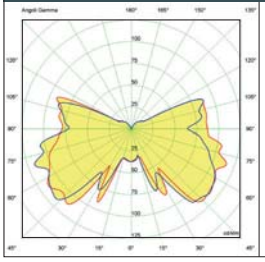

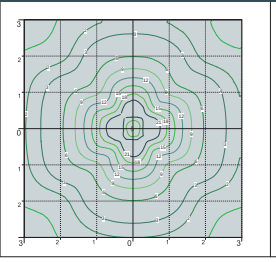

GOLIA *lantern clear with Fumagallli Filament Led Lamp 8W.*

POST height 2mt
6x6mt area: average 6 lux

The photometric data for all the versions are available upon request or on our website.

GOLIA

MEDIUM SIZE







MADE IN ITALY

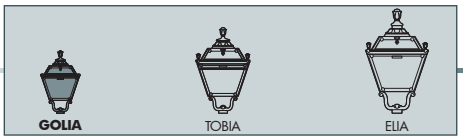

GOLIA
MEDIUM SIZE

BISSO/GOLIA

E27 lampholder	Q23.131.E27
6W LED	Q23.131.F1R
8W LED	Q23.131.M1R
12W LED	Q23.131.N1R

Pcs 12
Kg 19
mc 0,225

*2700K**

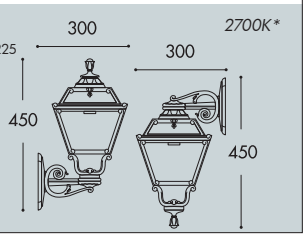

PORPORA/GOLIA

E27 lampholder	Q23.141.E27
6W LED	Q23.141.F1R
8W LED	Q23.141.M1R
12W LED	Q23.141.N1R

Pcs 1
Kg 4
mc 0,034

*2700K**

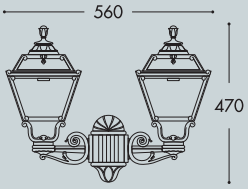

MINILOT/GOLIA

E27 lampholder	Q23.111.E27
6W LED	Q23.111.F1R
8W LED	Q23.111.M1R
12W LED	Q23.111.N1R

Pcs 12
Kg 19
mc 0,225

*2700K**

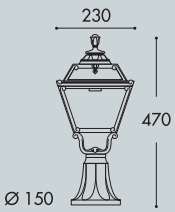

GOLIA

Q23.000

Pcs 1
Kg 1,3
mc 0,018

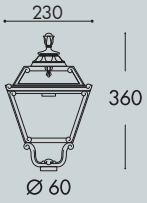

SICHEM/GOLIA

E27 lampholder	Q23.120.E27
6W LED	Q23.120.F1R
8W LED	Q23.120.M1R
12W LED	Q23.120.N1R

Pcs 12
Kg 19
mc 0,225

*2700K**

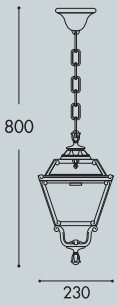

MIZAR/GOLIA resin

E27 lampholder	Q23.151.E27
6W LED	Q23.151.F1R
8W LED	Q23.151.M1R
12W LED	Q23.151.N1R

Pcs 1
Kg 3
mc 0,07

*2700K**

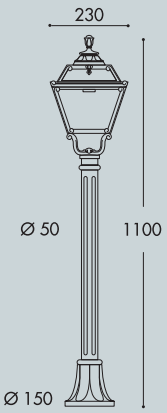

IAFET/GOLIA resin

E27 lampholder	Q23.162.E27
6W LED	Q23.162.F1R
8W LED	Q23.162.M1R
12W LED	Q23.162.N1R

Pcs 2
Kg 7,9
mc 0,086

*2700K**

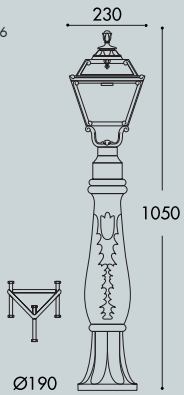

*TO ORDER THE 4000K VERSION, USE THE SUFFIXES
.F1L(6W) .M1L (8W) .N1L (12W)

ALOE'.R/GOLIA resin

E27 lampholder	Q23.163.E27
6W LED	Q23.163.F1R
8W LED	Q23.163.M1R
12W LED	Q23.163.N1R

Pcs 2
Kg 8,6
mc 0,121

*2700K**

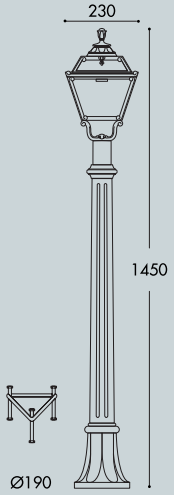

ARTU'/GOLIA

E27 lampholder	Q23.158.E27
6W LED	Q23.158.F1R
8W LED	Q23.158.M1R
12W LED	Q23.158.N1R

Pcs 1
Kg 9,6
mc 0,148

*2700K**



GIGI/GOLIA

E27 lampholder	Q23.156.E27
6W LED	Q23.156.F1R
8W LED	Q23.156.M1R
12W LED	Q23.156.N1R

Pcs 1
Kg 10,9
mc 0,172

*2700K**

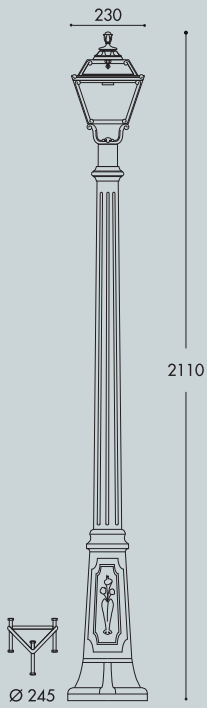

RICU/GOLIA

E27 lampholder	Q23.157.E27
6W LED	Q23.157.F1R
8W LED	Q23.157.M1R
12W LED	Q23.157.N1R

Pcs 1
Kg 11,7
mc 0,18

*2700K**

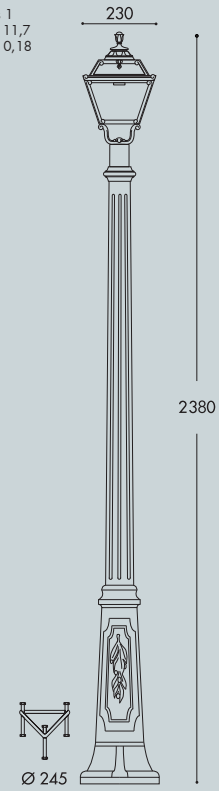

GOLIA

MEDIUM SIZE

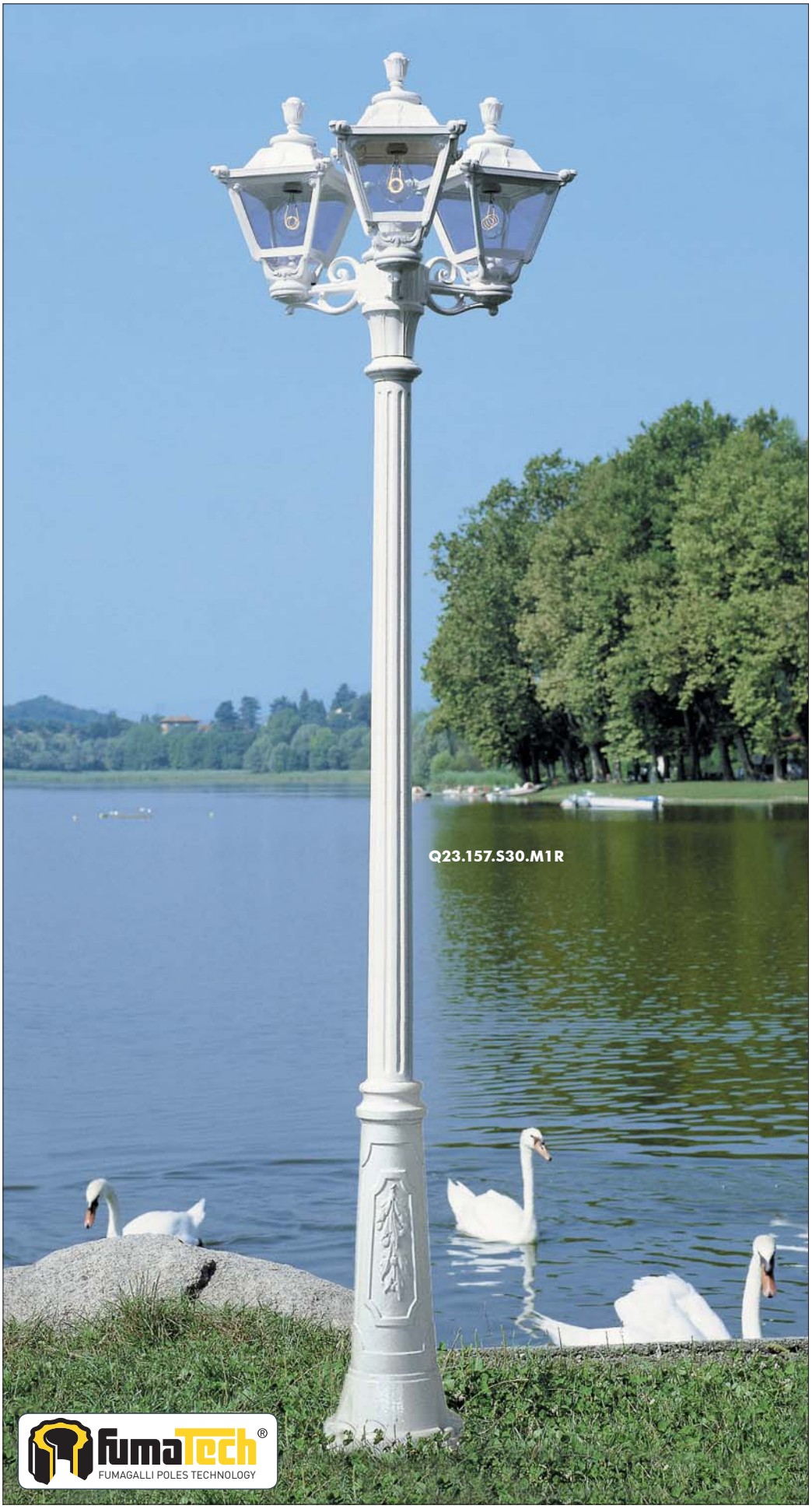





MADE IN ITALY

GIGI BISSO/GOLIA 2L

E27 lampholder	Q23.156.S20.E27
6W LED	Q23.156.S20.F1R
8W LED	Q23.156.S20.M1R
12W LED	Q23.156.S20.N1R

Pcs 1
Kg 13,5
mc 0,182

*2700K**

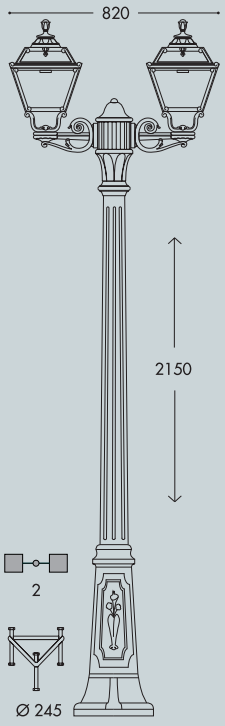

GIGI BISSO/GOLIA 3L

E27 lampholder	Q23.156.S30.E27
6W LED	Q23.156.S30.F1R
8W LED	Q23.156.S30.M1R
12W LED	Q23.156.S30.N1R

Pcs 1
Kg 14,7
mc 0,182

*2700K**

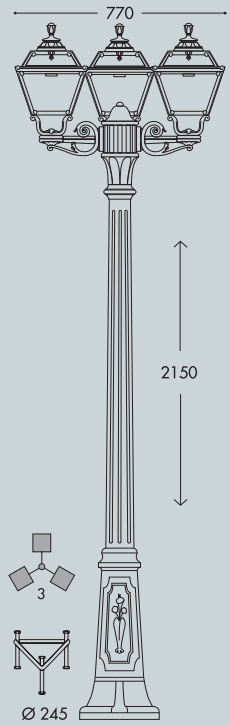

GIGI BISSO/GOLIA 2+1

E27 lampholder	Q23.156.S21.E27
6W LED	Q23.156.S21.F1R
8W LED	Q23.156.S21.M1R
12W LED	Q23.156.S21.N1R

Pcs 1
Kg 14,7
mc 0,182

*2700K**

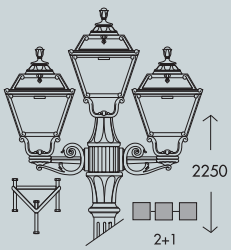

GIGI BISSO/GOLIA 3+1

E27 lampholder	Q23.156.S31.E27
6W LED	Q23.156.S31.F1R
8W LED	Q23.156.S31.M1R
12W LED	Q23.156.S31.N1R

Pcs 1
Kg 16
mc 0,182

*2700K**

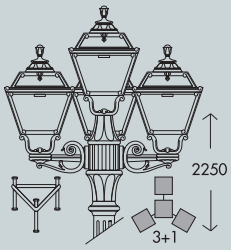

RICU BISSO/GOLIA 2L

E27 lampholder	Q23.157.S20.E27
6W LED	Q23.157.S20.F1R
8W LED	Q23.157.S20.M1R
12W LED	Q23.157.S20.N1R

Pcs 1
Kg 14,2
mc 0,214

*2700K**

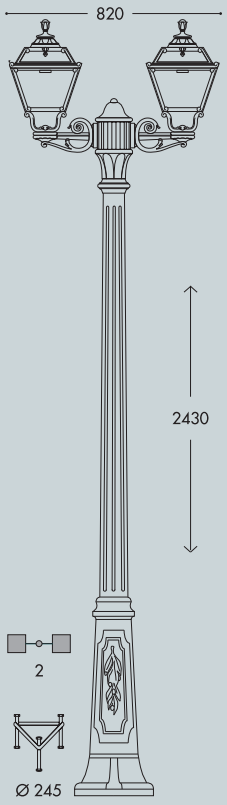

RICU BISSO/GOLIA 3L

E27 lampholder	Q23.157.S30.E27
6W LED	Q23.157.S30.F1R
8W LED	Q23.157.S30.M1R
12W LED	Q23.157.S30.N1R

Pcs 1
Kg 15,2
mc 0,214

*2700K**

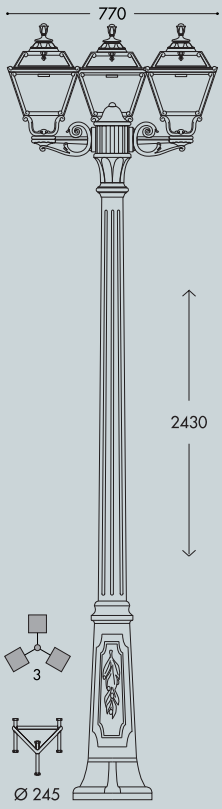

RICU BISSO/GOLIA 2+1

E27 lampholder	Q23.157.S21.E27
6W LED	Q23.157.S21.F1R
8W LED	Q23.157.S21.M1R
12W LED	Q23.157.S21.N1R

Pcs 1
Kg 15,2
mc 0,214

*2700K**

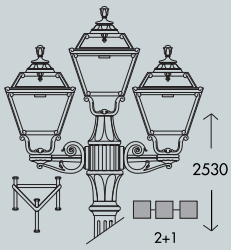

RICU BISSO/GOLIA 3+1

E27 lampholder	Q23.157.S31.E27
6W LED	Q23.157.S31.F1R
8W LED	Q23.157.S31.M1R
12W LED	Q23.157.S31.N1R

Pcs 1
Kg 16,5
mc 0,214

*2700K**

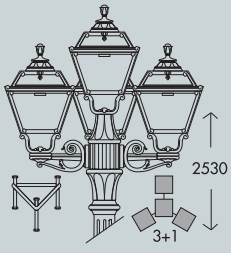

*TO ORDER THE 4000K VERSION, USE THE SUFFIXES .F1L(6W) .M1L (8W) .N1L (12W)

CEFA

MEDIUM SIZE

E27 square lantern in classic style, made of shockproof resin material, UV-rays stabilized, rust and corrosion-free. Modular construction suitable for post top, hanging and wall installation. Supplied as optional with TÜV approved, long-life and efficient **LED filament lamps** suitable for outdoor use. Insulation class II, protection rating IP55.

*Lanterna quadra E27 in stile classico, realizzata in resina antiurto, stabilizzata ai raggi UV, inattaccabile da ruggine e corrosione. Idonea per il montaggio a palo, a sospensione o a parete. Fornita anche completa di **lampadine LED a filamento** adatte ad uso in ambiente esterno, approvate TÜV, di lunga durata ed elevata efficienza. Classe di isolamento II, grado di protezione IP55.*



U23.111.M1R

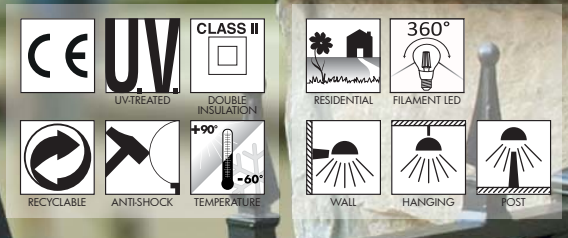

MADE IN ITALY

CEFA - LANTERN COMPONENTS

IP55



Decorative **PINNACLE** to be mounted on the roof top for post installation or on the lantern base for hanging installation.

PINNACOLO *decorativo applicabile alla sommità del tetto (montaggio a palo) o sulla base della gabbia (montaggio a sospensione).*



Lantern **ROOF** made of shockproof resin material, UV rays stabilized and supplied with E27 lampholder. Tool-free opening for relamping and maintenance,.

TETTO *realizzato in resina antiurto, stabilizzata ai raggi UV, fornito completo di portalampada E27. Removibile senza l'ausilio di attrezzi per manutenzione e cambio lampadina.*



DIFFUSER made of UV stabilized polymethylmethacrylate (PMMA) resistant to yellowing process due to sun rays, available in clear or opal color and provided with recess for power cable supply. Made of one piece only and closed at the bottom to ensure high protection against external agents (**IP 55**).

DIFFUSORE *in polimetilmetacrilato (PMMA) resistente al processo di ingiallimento dovuto ai raggi solari, disponibile in colore trasparente od opale e provvisto di scanalatura per il passaggio del cavo di alimentazione. Realizzato in un pezzo unico e con fondo chiuso per garantire un alto livello di protezione contro gli agenti esterni (**IP 55**).*

CAGE made of shockproof resin material, UV-rays stabilized, rust and corrosion-free.

GABBIA *realizzata in resina antiurto, stabilizzata ai raggi UV, inattaccabile da ruggine e corrosione.*

CEFA

U23.000 *



Dimensions and weight
Height: 380 mm
Width: 230 mm
Depth: 230 mm
Weight: 1,3 Kg

Moulded colours:
Black *White*

Painted colours:
Antique green *Antique bronze*

Diffuser PMMA:
Clear *Opal*

E27 VERSIONS



E27 (CFL-LED)		max 160 mm		*ADD. SUFFIX
				.E27
FILAMENT LED E27	6 W	800 Lm	4000 K	.F1L
			2700 K	.F1R
	8 W	1000 Lm	4000 K	.M1L
			2700 K	.M1R
	12 W	1500 Lm	4000 K	.N1L
			2700 K	.N1R

- **PERFECT MATCHING WITH CLASSIC LANTERNS**: clear LED filament lamp with the look and the feeling of a traditional incandescent bulb.
- **SUITABLE FOR OUTDOOR USE**: 100-240 V built-in driver fully protected against heat and humidity by silicone paste.
- **OMNIDIRECTIONAL LIGHT**: 360° light output for a better lighting distribution on hexagonal and square classic lanterns.
- **HIGH EFFICIENCY**: 90% energy saving.



6W 8W 12W = **60W 75W 100W** incandescent

SAVE 90%

LED LAMPS

More technical details about TÜV approved Fumagalli LED Lamps on page 512.

** ADD THESE SUFFIXES TO THE REFERENCES MENTIONED IN THE CATALOGUE*

PHOTOMETRIC DATA SAMPLE

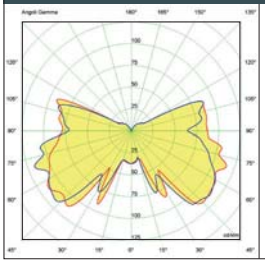

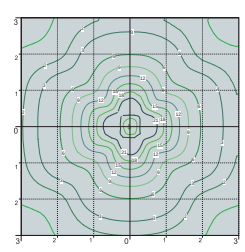

GOLIA *lantern clear with Fumagallli Filament Led Lamp 8W.*

POST height 2mt
6x6mt area: average 6 lux

The photometric data for all the versions are available upon request or on our website.

CEFA

MEDIUM SIZE







MADE IN ITALY

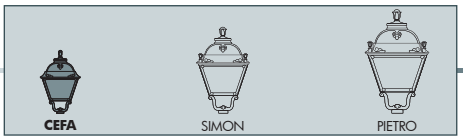

CEFA

MEDIUM SIZE

BISSO/CEFA

E27 lampholder	U23.131.E27
6W LED	U23.131.F1R
8W LED	U23.131.M1R
12W LED	U23.131.N1R

Pcs 12
Kg 19
mc 0,225

*2700K**

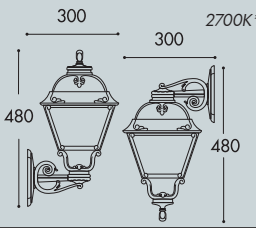

PORPORA/CEFA

E27 lampholder	U23.141.E27
6W LED	U23.141.F1R
8W LED	U23.141.M1R
12W LED	U23.141.N1R

Pcs 1
Kg 4
mc 0,034

*2700K**

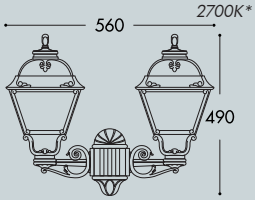

MINILOT/CEFA

E27 lampholder	U23.111.E27
6W LED	U23.111.F1R
8W LED	U23.111.M1R
12W LED	U23.111.N1R

Pcs 12
Kg 19
mc 0,225

*2700K**

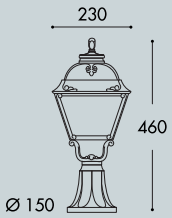

CEFA

U23.000

Pcs 1
Kg 1,3
mc 0,018

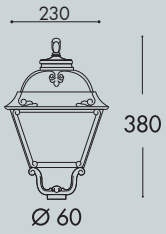

SICHEM/CEFA

E27 lampholder	U23.120.E27
6W LED	U23.120.F1R
8W LED	U23.120.M1R
12W LED	U23.120.N1R

Pcs 12
Kg 19
mc 0,225

*2700K**

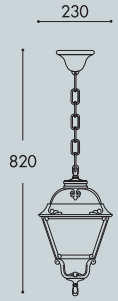

MIZAR/CEFA resin

E27 lampholder	U23.151.E27
6W LED	U23.151.F1R
8W LED	U23.151.M1R
12W LED	U23.151.N1R

Pcs 1
Kg 3
mc 0,07

*2700K**

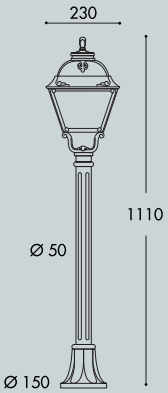

IAFET/CEFA resin

E27 lampholder	U23.162.E27
6W LED	U23.162.F1R
8W LED	U23.162.M1R
12W LED	U23.162.N1R

Pcs 2
Kg 7,9
mc 0,086

*2700K**

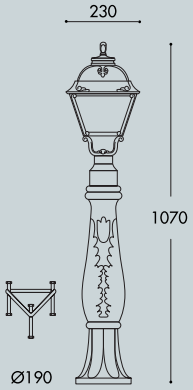

*TO ORDER THE 4000K VERSION, USE THE SUFFIXES
.F1L(6W) .M1L (8W) .N1L (12W)

ALOE'.R/CEFA resin

E27 lampholder	U23.163.E27
6W LED	U23.163.F1R
8W LED	U23.163.M1R
12W LED	U23.163.N1R

Pcs 2
Kg 8,6
mc 0,121

*2700K**

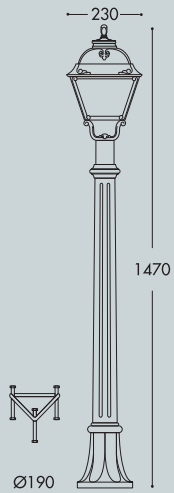

ARTU'/CEFA

E27 lampholder	U23.158.E27
6W LED	U23.158.F1R
8W LED	U23.158.M1R
12W LED	U23.158.N1R

Pcs 1
Kg 9,6
mc 0,148

*2700K**



GIGI/CEFA

E27 lampholder	U23.156.E27
6W LED	U23.156.F1R
8W LED	U23.156.M1R
12W LED	U23.156.N1R

Pcs 1
Kg 10,9
mc 0,172

*2700K**

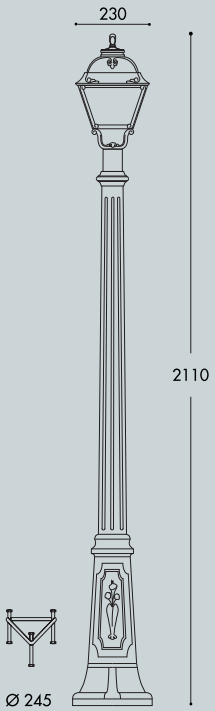

RICU/CEFA

E27 lampholder	U23.157.E27
6W LED	U23.157.F1R
8W LED	U23.157.M1R
12W LED	U23.157.N1R

Pcs 1
Kg 11,7
mc 0,18

*2700K**

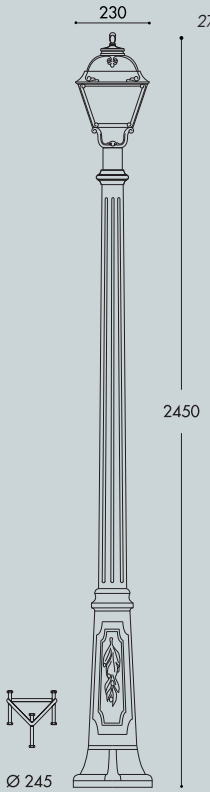

CEFA

MEDIUM SIZE







MADE IN ITALY

GIGI BISSO/CEFA 2L

E27 lampholder	U23.156.S20.E27
6W LED	U23.156.S20.F1R
8W LED	U23.156.S20.M1R
12W LED	U23.156.S20.N1R

Pcs 1
Kg 13,5
mc 0,182

*2700K**

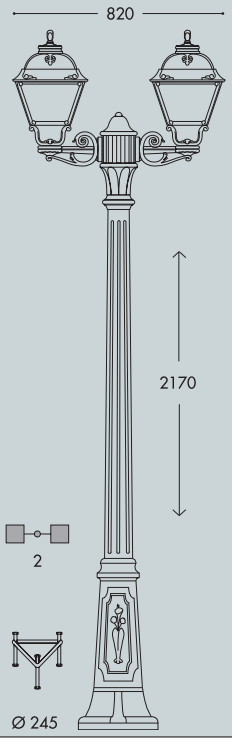

GIGI BISSO/CEFA 3L

E27 lampholder	U23.156.S30.E27
6W LED	U23.156.S30.F1R
8W LED	U23.156.S30.M1R
12W LED	U23.156.S30.N1R

Pcs 1
Kg 14,7
mc 0,182

*2700K**

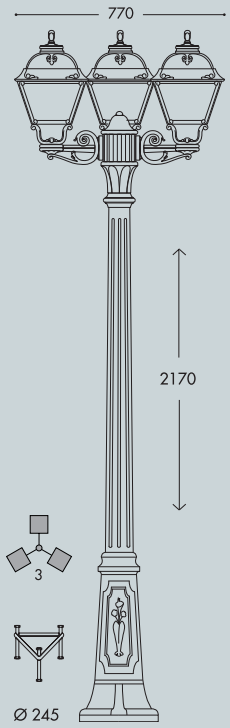

GIGI BISSO/CEFA 2+1

E27 lampholder	U23.156.S21.E27
6W LED	U23.156.S21.F1R
8W LED	U23.156.S21.M1R
12W LED	U23.156.S21.N1R

Pcs 1
Kg 14,7
mc 0,182

*2700K**

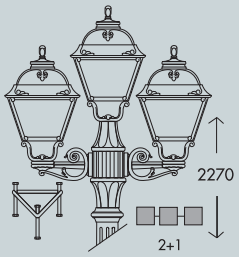

GIGI BISSO/CEFA 3+1

E27 lampholder	U23.156.S31.E27
6W LED	U23.156.S31.F1R
8W LED	U23.156.S31.M1R
12W LED	U23.156.S31.N1R

Pcs 1
Kg 16
mc 0,182

*2700K**

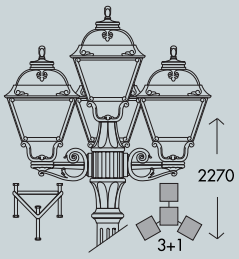

RICU BISSO/CEFA 2L

E27 lampholder	U23.157.S20.E27
6W LED	U23.157.S20.F1R
8W LED	U23.157.S20.M1R
12W LED	U23.157.S20.N1R

Pcs 1
Kg 14,2
mc 0,214

*2700K**

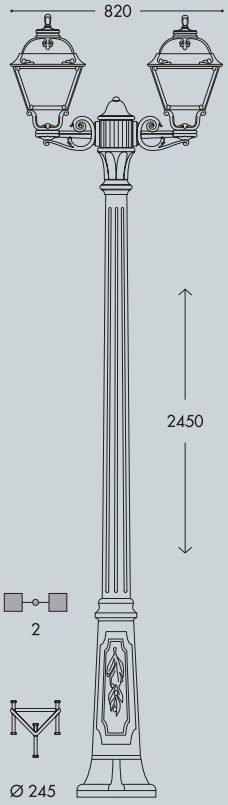

RICU BISSO/CEFA 3L

E27 lampholder	U23.157.S30.E27
6W LED	U23.157.S30.F1R
8W LED	U23.157.S30.M1R
12W LED	U23.157.S30.N1R

Pcs 1
Kg 15,2
mc 0,214

*2700K**

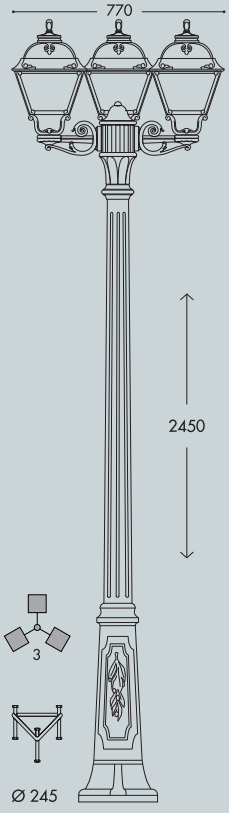

RICU BISSO/CEFA 2+1

E27 lampholder	U23.157.S21.E27
6W LED	U23.157.S21.F1R
8W LED	U23.157.S21.M1R
12W LED	U23.157.S21.N1R

Pcs 1
Kg 15,2
mc 0,214

*2700K**

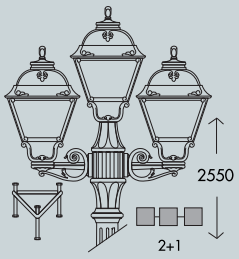

RICU BISSO/CEFA 3+1

E27 lampholder	U23.157.S31.E27
6W LED	U23.157.S31.F1R
8W LED	U23.157.S31.M1R
12W LED	U23.157.S31.N1R

Pcs 1
Kg 16,5
mc 0,214

*2700K**

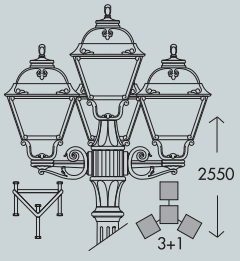

*TO ORDER THE 4000K VERSION, USE THE SUFFIXES .F1L(6W) .M1L (8W) .N1L (12W)

IESSE

SMALL SIZE

Half lantern in classic style with E27 lampholder, made of shockproof resin material, UV-rays stabilized, rust and corrosion-free. Supplied as optional with TÜV approved, long-life and efficient **LED filament lamps** suitable for outdoor use. Insulation class II, protection rating IP 55.

*Mezza lanterna in stile classico con portalampada E27, realizzata in resina antiurto, stabilizzata ai raggi UV, inattaccabile da ruggine e corrosione. Fornita anche completa di **lampadine LED a filamento** adatte ad uso in ambiente esterno, approvate TÜV, di lunga durata ed elevata efficienza. Classe di isolamento II, grado di protezione IP55.*

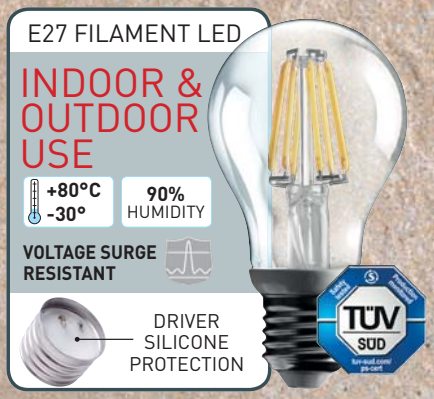



M22.000.F1R

CE · UV-TREATED · CLASS II DOUBLE INSULATION · RESIDENTIAL · RECYCLABLE · ANTI-SHOCK · +90° -60° TEMPERATURE · 360° FILAMENT LED · WALL

MADE IN ITALY

IESSE - LANTERN COMPONENTS

IP55



CAGE made of shockproof resin material, UV rays stabilized, rust and corrosion-free.

GABBIA *realizzata in resina antiurto, stabilizzata ai raggi UV, inattaccabile da ruggine e corrosione.*

DIFFUSER made of UV stabilized polymethylmethacrylate (PMMA) resistant to yellowing process due to sun rays, available in clear or opal color and made of one piece only.

DIFFUSORE *in polimetilmetacrilato (PMMA) resistente al processo di ingiallimento dovuto ai raggi solari, disponibile in colore trasparente od opale e realizzato in un pezzo unico.*

WALL PLATE *made of shockproof white resin reflective material, UV rays stabilized, rust and corrosion-free. Supplied complete with E27 lampholder.*

BASE A MURO *realizzata in resina antiurto in colore bianco riflettente, stabilizzata ai raggi UV, inattaccabile da ruggine e corrosione. Fornita completa di portalampada E27.*

IESSE

E27	M22.000.E27
6W LED	M22.000.F1R
8W LED	M22.000.M1R

Pcs 16
Kg 14
mc 0,224

*2700K**

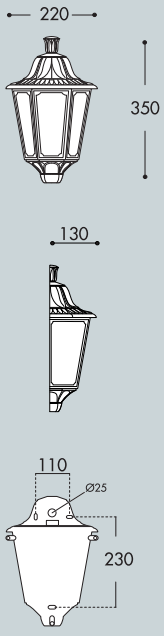

IESSE

M22.000 *



Dimensions and weight
Height: 350 mm
Width: 220 mm
Depth: 130 mm
Weight: 0,82 Kg

Moulded colours:
Black *White*

Painted colours:
Antique green *Antique bronze*

Diffuser PMMA:
Clear *Opal*

*TO ORDER THE 4000K VERSION, USE THE SUFFIXES .F1L(6W) .M1L (8W) .N1L (12W)

E27 VERSIONS



				*ADD. SUFFIX
E27 (CFL-LED)		max 160 mm		.E27
FILAMENT LED E27	**6 W**	**800 Lm**	4000 K	.F1L
			2700 K	.F1R
	8 W	**1000 Lm**	4000 K	.M1L
			2700 K	.M1R

- **PERFECT MATCHING WITH CLASSIC LANTERNS**: clear LED filament lamp with the look and the feeling of a traditional incandescent bulb.
- **SUITABLE FOR OUTDOOR USE**: 100-240 V built-in driver fully protected against heat and humidity by silicone paste.
- **OMNIDIRECTIONAL LIGHT**: 360° light output for a better lighting distribution on hexagonal and square classic lanterns.
- **HIGH EFFICIENCY**: 90% energy saving.



6W
8W
=
60W
75W
incandescent

SAVE 90%

LED LAMPS

More technical details about TÜV approved Fumagalli LED Lamps on page 512.

*ADD THESE SUFFIXES TO THE REFERENCES MENTIONED IN THE CATALOGUE

PHOTOMETRIC DATA SAMPLE

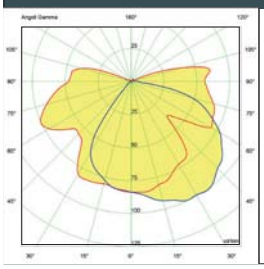

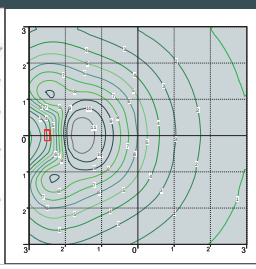

IESSE *lantern clear with Fumagallli Filament Led Lamp 6W.*

height wall mounting: 2mt
6x6mt area: average 4 lux

The photometric data for all the versions are available upon request or on our website.

DARIA

LARGE SIZE

Half lantern in classic style, made of shockproof resin material, UV-rays stabilized, rust and corrosion-free. E27 version with support for ballast fixation or supplied with TÜV approved, long-life and efficient **LED filament lamps** suitable for outdoor use. Insulation class II, protection rating IP 55.

*Mezza lanterna in stile classico, realizzata in resina antiurto, stabilizzata ai raggi UV, inattaccabile da ruggine e corrosione. Versione E27 idonea all'utilizzo di reattori o fornita completa di **lampadine LED a filamento** adatte ad uso in ambiente esterno, approvate TÜV, di lunga durata ed elevata efficienza. Classe di isolamento II, grado di protezione IP55.*



M28.000.N1R

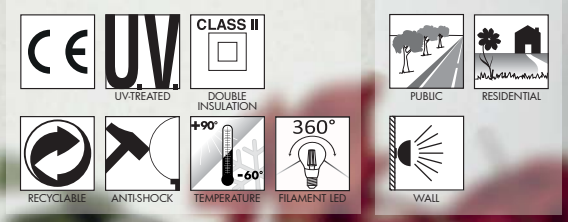

DARIA - LANTERN COMPONENTS

IP55



CAGE made of shockproof resin material, UV rays stabilized, rust and corrosion-free.

GABBIA *realizzata in resina antiurto, stabilizzata ai raggi UV, inattaccabile da ruggine e corrosione.*

DIFFUSER made of UV stabilized polymethylmethacrylate (PMMA) resistant to yellowing process due to sun rays, available in clear or opal color and made of one piece only.

DIFFUSORE *in polimetilmetacrilato (PMMA) resistente al processo di ingiallimento dovuto ai raggi solari, disponibile in colore trasparente od opale e realizzato in un pezzo unico.*

High temperature resistant **WALL PLATE** made of white polycarbonate (PC), with support for ballast fixation. Supplied complete with E27 lampholder.

BASE A MURO *realizzata in policarbonato (PC) bianco ad alta resistenza al calore, con supporto per il fissaggio dei reattori. Fornita completa di portalampada E27.*

DARIA

E27	M28.000.E27
8W LED	M28.000.M1R
12W LED	M28.000.N1R

Pcs 1
Kg 2,3
mc 0,03

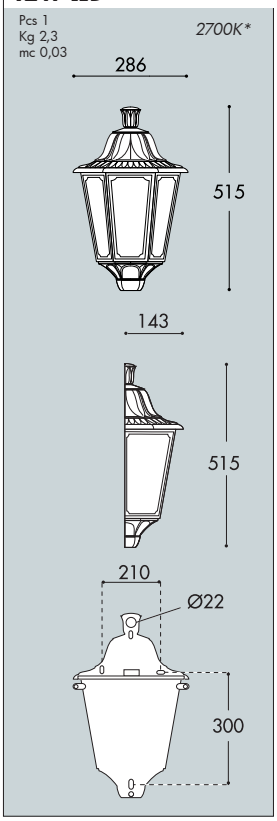

DARIA

M28.000 *



Dimensions and weight
Height: 515 mm
Width: 286 mm
Depth: 143 mm
Weight: 2,3 Kg

Moulded colours:
Black White

Painted colours:
Antique green Antique bronze

Diffuser PMMA:
Clear Opal

*TO ORDER THE 4000K VERSION, USE THE SUFFIXES .F1L(6W) .M1L (8W) .N1L (12W)

E27 VERSIONS



Suitable lamps: CFL-LED SON-HQI MAX 70W		E27 lampholder only		*ADD. SUFFIX
FILAMENT LED E27	8 W	1000 Lm	4000 K	.M1L
			2700 K	.M1R
	12 W	1500 Lm	4000 K	.N1L
			2700 K	.N1R

- **PERFECT MATCHING WITH CLASSIC LANTERNS**: clear LED filament lamp with the look and the feeling of a traditional incandescent bulb.
- **SUITABLE FOR OUTDOOR USE**: 100-240 V built-in driver fully protected against heat and humidity by silicone paste.
- **OMNIDIRECTIONAL LIGHT**: 360° light output for a better lighting distribution on hexagonal and square classic lanterns.
- **HIGH EFFICIENCY**: 90% energy saving.



6W 8W 12W = **60W 75W 100W** incandescent

SAVE 90%

LED LAMPS

More technical details about TÜV approved Fumagalli LED Lamps on page 512.

** ADD THESE SUFFIXES TO THE REFERENCES MENTIONED IN THE CATALOGUE*

PHOTOMETRIC DATA SAMPLE

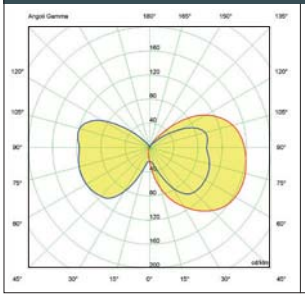

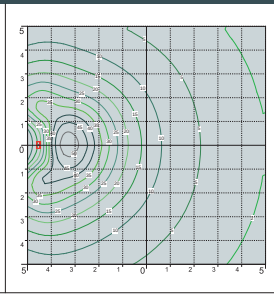

DARIA *lantern clear SON 70W.*

height wall mounting: 2,5mt
10x10mt area: average 12 lux

The photometric data for all the versions are available upon request or on our website.

GLOBE 250 CLASSIC

SMALL SIZE

Ø 250 mm PMMA globe, complete with classic globe base made of shockproof resin material, UV-rays stabilized, rust and corrosion-free. Suitable for post top, hanging and wall installation. Supplied as optional with TÜV approved, long-life and efficient **LED filament lamps** suitable for outdoor use. Insulation class II, protection rating IP 55.

*Globo Ø 250 mm in polimetilmetacrilato (PMMA) completo di base classica realizzata in resina antiurto, stabilizzata ai raggi UV, inattaccabile da ruggine e corrosione. Idoneo per il montaggio a palo, a sospensione o a parete. Fornito anche completo di **lampadine LED a filamento** adatte ad uso in ambiente esterno, approvate TÜV, di lunga durata ed elevata efficienza. Classe di isolamento II, grado di protezione IP55.*

G25.131



GLOBE 250 CLASSIC

SMALL SIZE

GLOBE 250 CLASSIC - COMPONENTS

IP55



Ø 250 mm **GLOBE** made of UV-rays stabilized polymethylmethacrylate (PMMA), one piece only. Available in clear, opal or smoked colour.

***GLOBO** Ø 250 mm in polimetilmetacrilato (PMMA), resistente all'ingiallimento ed ai raggi UV, realizzato in un unico pezzo. Disponibile nei colori trasparente, bianco o fumé.*

Clear (X) | Opal (Y) | Smoked (Z)

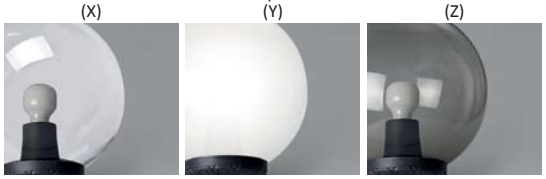



GLOBE BASE with classic design, made of shockproof resin material, UV-rays stabilized, rust and corrsoion-free. Supplied complete with E27 lampholder.

***REGGIBOCCIA** con disegno classico realizzato in resina antiurto, stabilizzato ai raggi UV, inattaccabile da ruggine e corrosione. Fornito completo di portalampada E27.*

GLOBE 250 CLASSIC

G25.B25 *

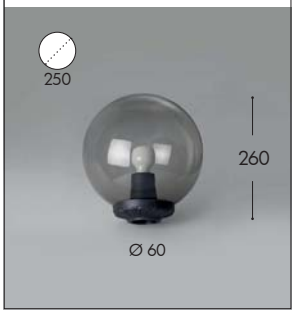

Dimensions and weight
Height: 260 mm
Diameter: 250 mm
Weight: 0,8 Kg

Moulded colours:
Black | White

Painted colours:
Antique green | Antique bronze

Diffuser PMMA:
Clear | Opal | Smoked

E27 VERSIONS



				*ADD. SUFFIX
E27 (CFL-LED)		max 160 mm		.E27
FILAMENT LED E27	6 W	800 Lm	4000 K	.F1L
			2700 K	.F1R
	8 W	1000 Lm	4000 K	.M1L
			2700 K	.M1R
	12 W	1500 Lm	4000 K	.N1L
			2700 K	.N1R

Globe supplied with **E27** base. Provided as an option with TÜV approved, long-life and efficient **LED filament lamps suitable for outdoor use** with built-in driver fully protected against heat and humidity by silicone paste.



6W 8W 12W = **60W 75W 100W** incandescent

SAVE 90%

LED LAMPS

More technical details about TÜV approved Fumagalli LED Lamps on page 512.

** ADD THESE SUFFIXES TO THE REFERENCES MENTIONED IN THE CATALOGUE*

PHOTOMETRIC DATA SAMPLE

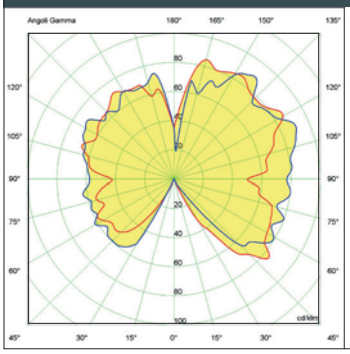

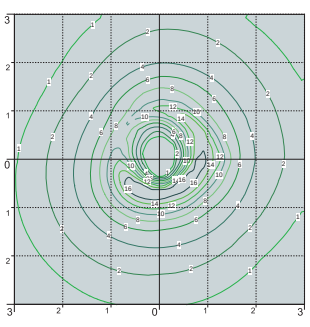

***GLOBE 250 CLASSIC** clear with Fumagallli Filament Led Lamp 6W.*

POST height 1mt
6x6mt area: average 4 lux

The photometric data for all the versions are available upon request or on our website.

GLOBE 250 CLASSIC

SMALL SIZE



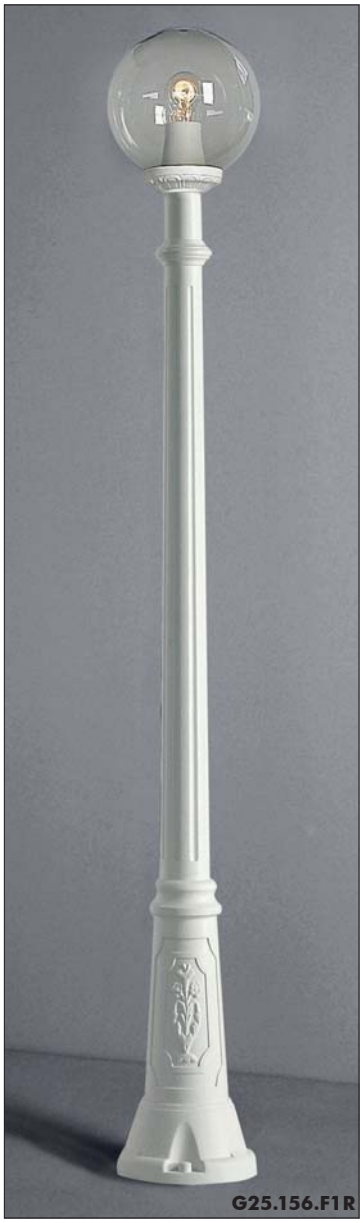









MIKROLOT/G250

E27	G25.110.E27
6W LED	G25.110.F1R
8W LED	G25.110.M1R
12W LED	G25.110.N1R

Pcs 36
Kg 42
mc 0,829

2700K*

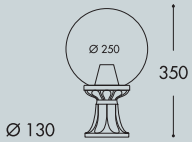

BISSO/G250

E27	G25.131.E27
6W LED	G25.131.F1R
8W LED	G25.131.M1R
12W LED	G25.131.N1R

Pcs 36
Kg 42
mc 0,829

2700K*

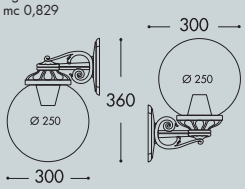

PORPORA/G250

E27	G25.141.E27
6W LED	G25.141.F1R
8W LED	G25.141.M1R
12W LED	G25.141.N1R

Pcs 1
Kg 4
mc 0,028

2700K*

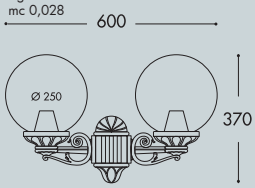

*TO ORDER THE 4000K VERSION, USE THE SUFFIXES
.F1L(6W) .M1L (8W) .N1L (12W)

GLOBE 250 CLASSIC

G25.B25

Pcs 2
Kg 1,6
mc 0,025

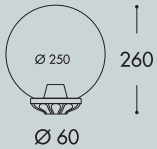

MIZAR/G250 resin

E27	G25.151.E27
6W LED	G25.151.F1R
8W LED	G25.151.M1R
12W LED	G25.151.N1R

Pcs 2
Kg 4
mc 0,078

2700K*

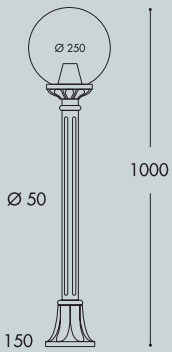

IAFET.R/G250 resin

E27	G25.162.E27
6W LED	G25.162.F1R
8W LED	G25.162.M1R
12W LED	G25.162.N1R

Pcs 2
Kg 6,9
mc 0,092

2700K*

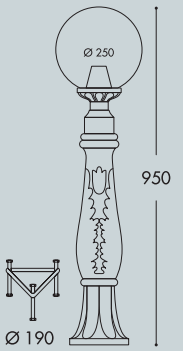

SICHEM/G250

E27	G25.120.E27
6W LED	G25.120.F1R
8W LED	G25.120.M1R
12W LED	G25.120.N1R

Pcs 36
Kg 42
mc 0,829

2700K*

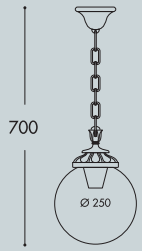

GIGI BISSO/G250 3L

E27	G25.156.S30.E27
6W LED	G25.156.S30.F1R
8W LED	G25.156.S30.M1R
12W LED	G25.156.S30.N1R

Pcs 2
Kg 25,4
mc 0,31

2700K*

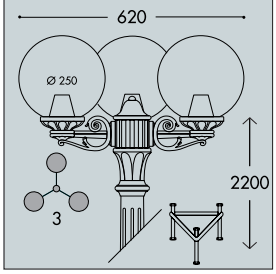

RICU BISSO/G250 3L

E27	G25.157.S30.E27
6W LED	G25.157.S30.F1R
8W LED	G25.157.S30.M1R
12W LED	G25.157.S30.N1R

Pcs 2
Kg 27,5
mc 0,339

2700K*

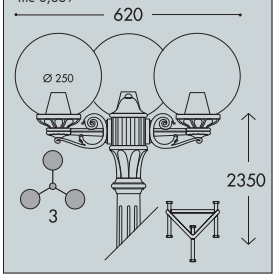

GIGI/G250

E27	G25.156.E27
6W LED	G25.156.F1R
8W LED	G25.156.M1R
12W LED	G25.156.N1R

Pcs 2
Kg 20,1
mc 0,217

2700K*

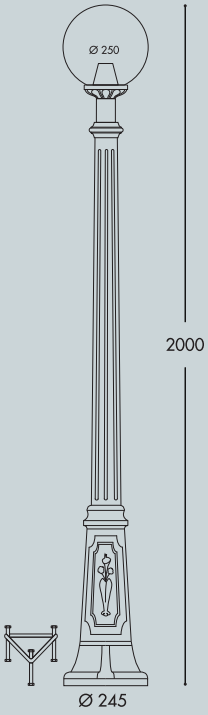

GIGI BISSO/G250 2L

E27	G25.156.S20.E27
6W LED	G25.156.S20.F1R
8W LED	G25.156.S20.M1R
12W LED	G25.156.S20.N1R

Pcs 2
Kg 23,7
mc 0,27

2700K*

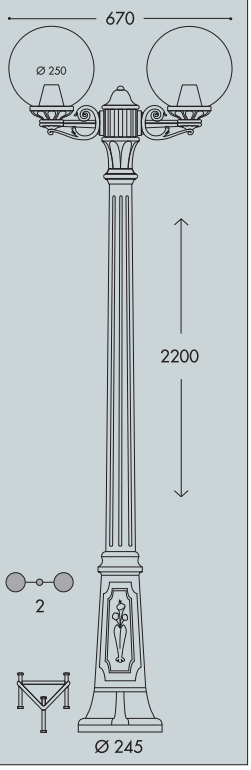

RICU BISSO/G250 2L

E27	G25.157.S20.E27
6W LED	G25.157.S20.F1R
8W LED	G25.157.S20.M1R
12W LED	G25.157.S20.N1R

Pcs 2
Kg 24,8
mc 0,304

2700K*

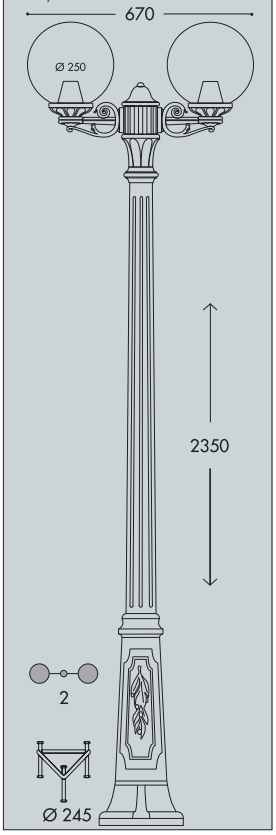

ALOE'.R/G250 resin

E27	G25.163.E27
6W LED	G25.163.F1R
8W LED	G25.163.M1R
12W LED	G25.163.N1R

Pcs 2
Kg 7
mc 0,122

2700K*

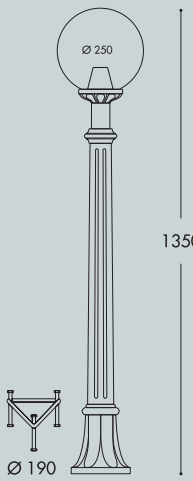

ARTU'/G250

E27	G25.158.E27
6W LED	G25.158.F1R
8W LED	G25.158.M1R
12W LED	G25.158.N1R

Pcs 2
Kg 17,1
mc 0,186

2700K*

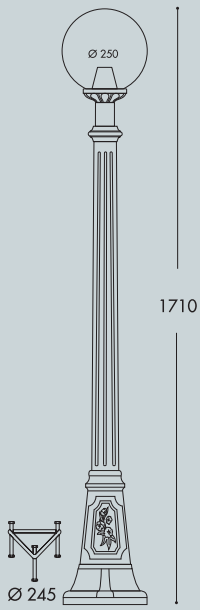

GLOBE 300 CLASSIC

MEDIUM SIZE

Ø 300 mm PMMA globe, complete with classic globe base made of shockproof resin material, UV-rays stabilized, rust and corrosion-free. Suitable for post top, hanging and wall installation. Supplied as optional with TÜV approved, long-life and efficient **LED filament lamps** suitable for outdoor use. Insulation class II, protection rating IP 55.

*Globo Ø 300 mm in polimetilmetacrilato (PMMA) completo di base classica realizzata in resina antiurto, stabilizzata ai raggi UV, inattaccabile da ruggine e corrosione. Idoneo per il montaggio a palo, a sospensione o a parete. Fornito anche completo di **lampadine LED a filamento** adatte ad uso in ambiente esterno, approvate TÜV, di lunga durata ed elevata efficienza. Classe di isolamento II, grado di protezione IP55.*

G30.111

G30.162

E27 FILAMENT LED

INDOOR & OUTDOOR USE

+80°C -30°

90% HUMIDITY

VOLTAGE SURGE RESISTANT

DRIVER SILICONE PROTECTION

CE · UV TREATED · CLASS II DOUBLE INSULATION · RESIDENTIAL

RECYCLABLE · ANTI SHOCK · +90° -60° TEMPERATURE · WALL · HANGING · POST

MADE IN ITALY

GLOBE 300 CLASSIC

MEDIUM SIZE

GLOBE 300 CLASSIC - COMPONENTS

IP55



Ø 300 mm **GLOBE** made of UV-rays stabilized polymethylmethacrylate (PMMA), one piece only. Available in clear, opal or smoked colour.

GLOBO *Ø 300 mm in polimetilmetacrilato (PMMA), resistente all'ingiallimento ed ai raggi UV, realizzato in un unico pezzo. Disponibile nei colori trasparente, bianco o fumé.*

Clear (X) | Opal (Y) | Smoked (Z)





GLOBE BASE with classic design, made of shockproof resin material, UV-rays stabilized, rust and corrosion-free. Supplied complete with E27 lampholder.

REGGIBOCCIA *con disegno classico realizzato in resina antiurto, stabilizzato ai raggi UV, inattaccabile da ruggine e corrosione. Fornito completo di portalampada E27.*

GLOBE 300 CLASSIC

G30.B30 *



Dimensions and weight
Height: 310 mm
Diameter: 300 mm
Weight: 1,1 Kg

Moulded colours:
Black *White*

Painted colours:
Antique green *Antique bronze*

Diffuser PMMA:
Clear *Opal* *Smoked*

E27 VERSIONS



				*ADD. SUFFIX
E27 (CFL-LED)		max 160 mm		.E27
FILAMENT LED E27	**6 W**	**800 Lm**	4000 K	.F1L
			2700 K	.F1R
	8 W	**1000 Lm**	4000 K	.M1L
			2700 K	.M1R
	12 W	**1500 Lm**	4000 K	.N1L
			2700 K	.N1R

Globe supplied with **E27** base. Provided as an option with TÜV approved, long-life and efficient **LED filament lamps suitable for outdoor use** with built-in driver fully protected against heat and humidity by silicone paste.



6W 8W 12W = **60W 75W 100W** incandescent

SAVE 90%

LED LAMPS

More technical details about TÜV approved Fumagalli LED Lamps on page 512.

** ADD THESE SUFFIXES TO THE REFERENCES MENTIONED IN THE CATALOGUE*

PHOTOMETRIC DATA SAMPLE

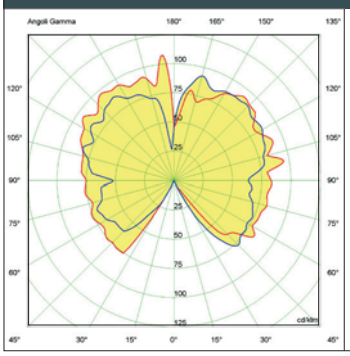

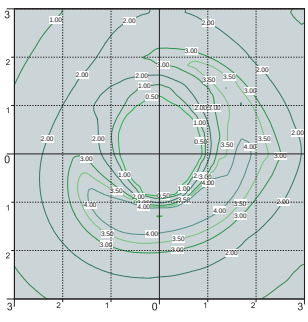

GLOBE 300 CLASSIC *clear with Fumagallli Filament Led Lamp 8W.*

POST height 2mt
6x6mt area: average 3,5 lux

The photometric data for all the versions are available upon request or on our website.

GLOBE 300 CLASSIC

MEDIUM SIZE









MADE IN ITALY

GLOBE 300 CLASSIC

MEDIUM SIZE

RICU BISSO/G300 2L

E27	G30.157.S20.E27
6W LED	G30.157.S20.F1R
8W LED	G30.157.S20.M1R
12W LED	G30.157.S20.N1R

Pcs 2
Kg 29,4
mc 0,366

*2700K**

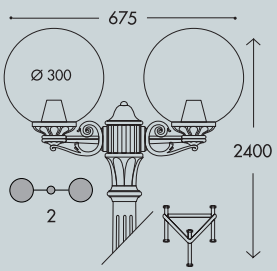

RICU BISSO/G300 3L

E27	G30.157.S30.E27
6W LED	G30.157.S30.F1R
8W LED	G30.157.S30.M1R
12W LED	G30.157.S30.N1R

Pcs 2
Kg 31,8
mc 0,401

*2700K**

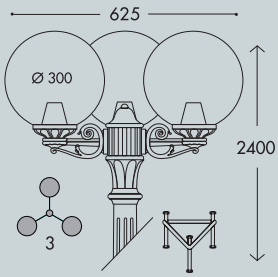

BISSO/G300

E27	G30.131.E27
6W LED	G30.131.F1R
8W LED	G30.131.M1R
12W LED	G30.131.N1R

Pcs 24
Kg 44,2
mc 0,638

*2700K**

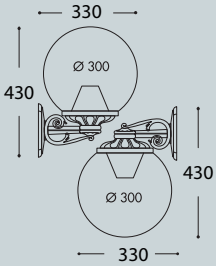

SICHEM/G300

E27	G30.120.E27
6W LED	G30.120.F1R
8W LED	G30.120.M1R
12W LED	G30.120.N1R

Pcs 24
Kg 44,2
mc 0,638

*2700K**

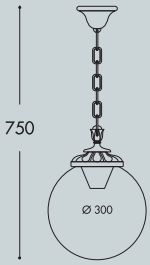

GLOBE 300 CLASSIC

G30.B30

Pcs 2
Kg 2,2
mc 0,059

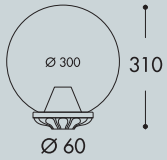

*TO ORDER THE 4000K VERSION, USE THE SUFFIXES
.F1L(6W) .M1L (8W) .N1L (12W)

RICU/G300

E27	G30.157.E27
6W LED	G30.157.F1R
8W LED	G30.157.M1R
12W LED	G30.157.N1R

Pcs 2
Kg 22,2
mc 0,274

*2700K**

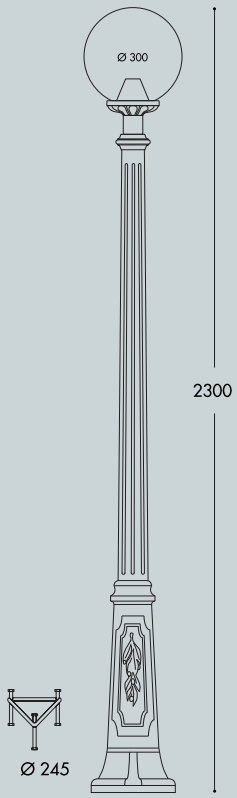

GIGI/G300

E27	G30.156.E27
6W LED	G30.156.F1R
8W LED	G30.156.M1R
12W LED	G30.156.N1R

Pcs 2
Kg 20,7
mc 0,242

*2700K**

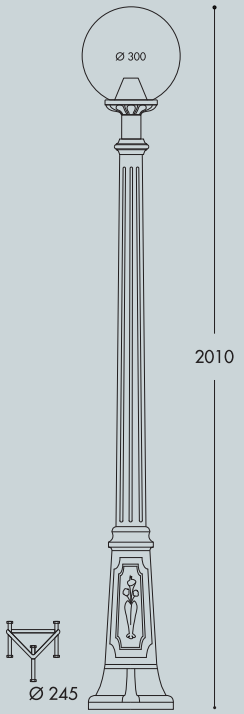

ARTU'/G300

E27	G30.158.E27
6W LED	G30.158.F1R
8W LED	G30.158.M1R
12W LED	G30.158.N1R

Pcs 2
Kg 17,7
mc 0,211

*2700K**



ALOE'.R/G300

E27	G30.163.E27
6W LED	G30.163.F1R
8W LED	G30.163.M1R
12W LED	G30.163.N1R

Pcs 2
Kg 8,2
mc 0,146

*2700K**

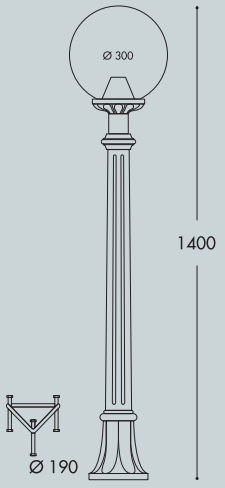

MINILOT/G300

E27	G30.111.E27
6W LED	G30.111.F1R
8W LED	G30.111.M1R
12W LED	G30.111.N1R

Pcs 24
Kg 44,2
mc 0,638

*2700K**

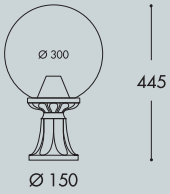

IAFET.R/G300 resin

E27	G30.162.E27
6W LED	G30.162.F1R
8W LED	G30.162.M1R
12W LED	G30.162.N1R

Pcs 2
Kg 7,5
mc 0,117

*2700K**

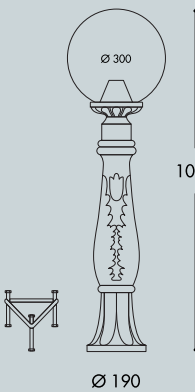

GLOBE 300 CLASSIC

MEDIUM SIZE







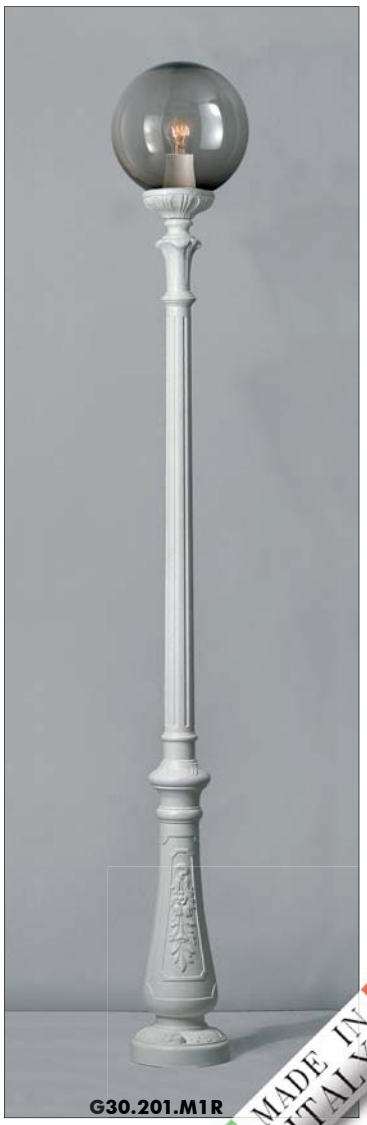

MADE IN ITALY

RICU OFIR/G300 3L	
E27	G30.157.R30.E27
6W LED	G30.157.R30.F1R
8W LED	G30.157.R30.M1R
12W LED	G30.157.R30.N1R

Pcs 2
Kg 29,9
mc 0,439
*2700K**

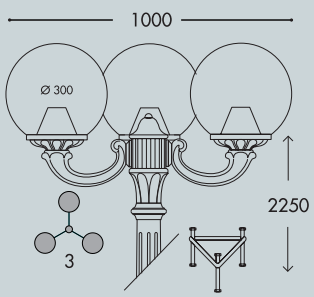

MIRRA/G300	
E27	G30.142.E27
6W LED	G30.142.F1R
8W LED	G30.142.M1R
12W LED	G30.142.N1R

Pcs 1
Kg 5,1
mc 0,077
*2700K**

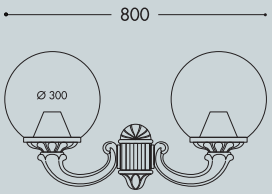

OFIR/G300	
E27	G30.132.E27
6W LED	G30.132.F1R
8W LED	G30.132.M1R
12W LED	G30.132.N1R

Pcs 2
Kg 4,6
mc 0,077
*2700K**

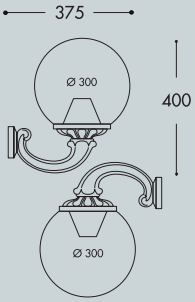

*TO ORDER THE 4000K VERSION, USE THE SUFFIXES
.F1L(6W) .M1L (8W) .N1L (12W)

RICU OFIR/G300 2L	
E27	G30.157.R20.E27
6W LED	G30.157.R20.F1R
8W LED	G30.157.R20.M1R
12W LED	G30.157.R20.N1R

Pcs 2
Kg 26,3
mc 0,379
*2700K**

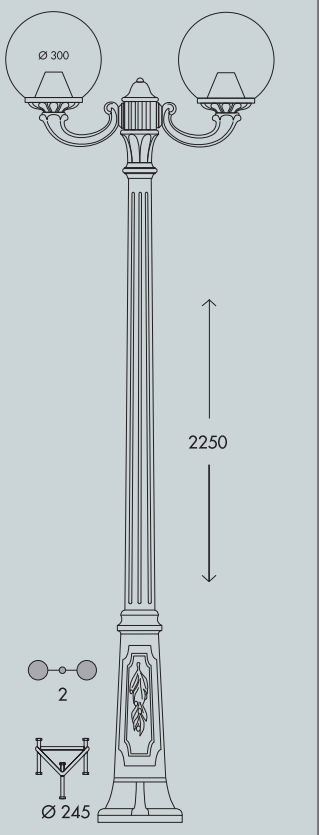

NEBO/G300	
E27	G30.201.E27
6W LED	G30.201.F1R
8W LED	G30.201.M1R
12W LED	G30.201.N1R

Pcs 1
Kg 22,2
mc 0,163
*2700K**

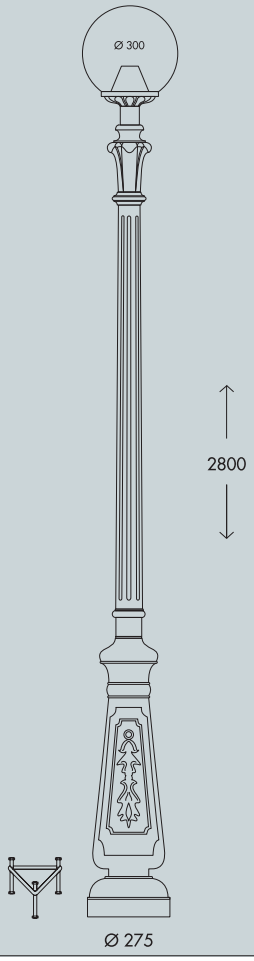

NEBO OFIR/G300 2L	
E27	G30.201.R20.E27
6W LED	G30.201.R20.F1R
8W LED	G30.201.R20.M1R
12W LED	G30.201.R20.N1R

Pcs 1
Kg 25,7
mc 0,208
*2700K**

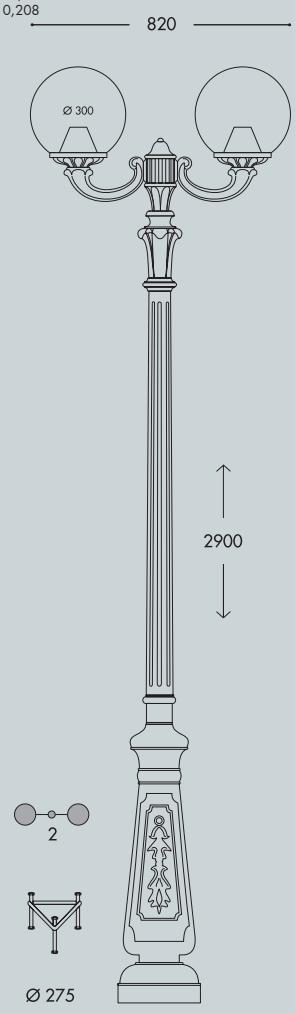

NEBO OFIR/G300 3L	
E27	G30.201.R30.E27
6W LED	G30.201.R30.F1R
8W LED	G30.201.R30.M1R
12W LED	G30.201.R30.N1R

Pcs 1
Kg 30,8
mc 0,237
*2700K**

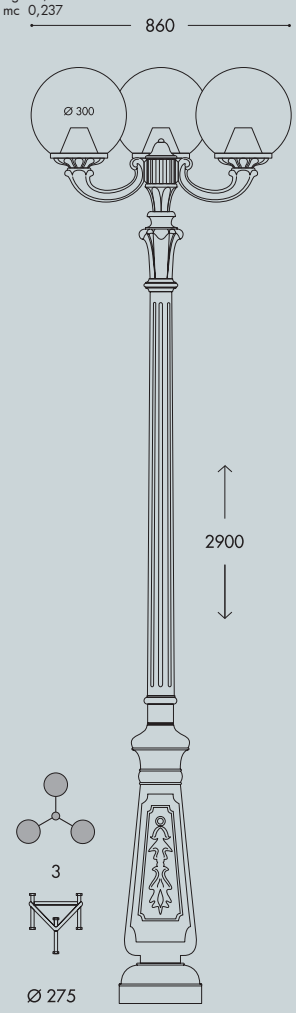

GLOBE 300 MODERN

MEDIUM SIZE

Ø 300 mm PMMA globe, complete with modern globe base made of shockproof resin material, UV-rays stabilized, rust and corrosion-free. Suitable for post top or wall installation. Supplied as optional with TÜV approved, long-life and efficient **LED filament lamps** suitable for outdoor use. Insulation class II, protection rating IP 55.

*Globo Ø 300 mm in polimetilmetacrilato (PMMA) completo di base moderna realizzata in resina antiurto, stabilizzata ai raggi UV, inattaccabile da ruggine e corrosione. Idoneo per il montaggio a palo o a parete. Fornito anche completo di **lampadine LED a filamento** adatte ad uso in ambiente esterno, approvate TÜV, di lunga durata ed elevata efficienza. Classe di isolamento II, grado di protezione IP55.*

G31.262



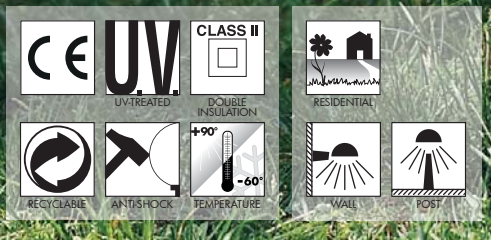

MADE IN ITALY

GLOBE 300 MODERN - COMPONENTS

IP55





Ø 300 mm **GLOBE** made of UV-rays stabilized polymethylmethacrylate (PMMA), one piece only. Available in clear, opal or smoked colour.

GLOBO *Ø 300 mm in polimetilmetacrilato (PMMA), resistente all'ingiallimento ed ai raggi UV, realizzato in un unico pezzo. Disponibile nei colori trasparente, bianco o fumé.*

Clear (X) | Opal (Y) | Smoked (Z)



GLOBE BASE with modern design made of shockproof resin material, UV-rays stabilized, rust and corrosion-free. Supplied complete with E27 lampholder.

REGGIBOCCIA *con disegno moderno realizzato in resina antiurto, stabilizzato ai raggi UV, inattaccabile da ruggine e corrosione. Fornito completo di portalampada E27.*

GLOBE 300 MODERN

G31.B30 *



Dimensions and weight
Height: 310 mm
Diameter: 300 mm
Weight: 1,1 Kg

Moulded colours:
Black White

Diffuser PMMA:
Clear Opal Smoked

E27 VERSIONS



				*ADD. SUFFIX
E27 (CFL-LED)		max 160 mm		.E27
FILAMENT LED E27	6 W	800 Lm	4000 K	.F1L
			2700 K	.F1R
	8 W	1000 Lm	4000 K	.M1L
			2700 K	.M1R
	12 W	1500 Lm	4000 K	.N1L
			2700 K	.N1R

Globe supplied with **E27** base. Provided as an option with TÜV approved, long-life and efficient **LED filament lamps suitable for outdoor use** with built-in driver fully protected against heat and humidity by silicone paste.



6W
8W
12W
=
60W
75W
100W
incandescent

SAVE 90%

LED LAMPS

More technical details about TÜV approved Fumagalli LED Lamps on page 512.

** ADD THESE SUFFIXES TO THE REFERENCES MENTIONED IN THE CATALOGUE*

PHOTOMETRIC DATA SAMPLE

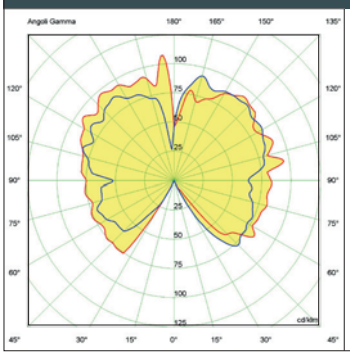

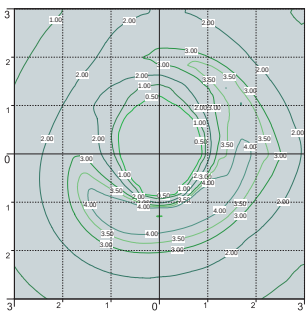

GLOBE 300 MODERN *clear with Fumagallli Filament Led Lamp 6W.*

POST height 2mt
6x6mt area: average 2,5 lux

The photometric data for all the versions are available upon request or on our website.

GLOBE 300 MODERN

MEDIUM SIZE













MADE IN ITALY

ILIO/GLOBE 300

G31.251

Pcs 2
Kg 5,7
mc 0,1144

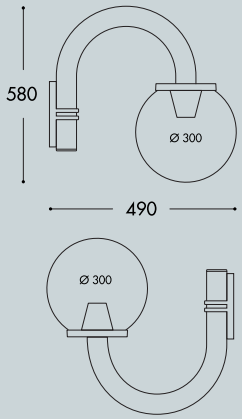

ARGO/G300

G31.241 resin

Pcs 4
Kg 6,7
mc 0,148

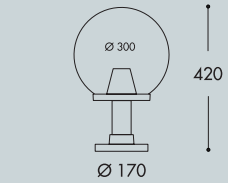

FEBO 500/G300

G31.261 resin

Pcs 2
Kg 6
mc 0,117

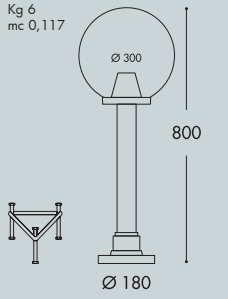

FEBO 1000/G300

G31.262 resin

Pcs 2
Kg 7,2
mc 0,146

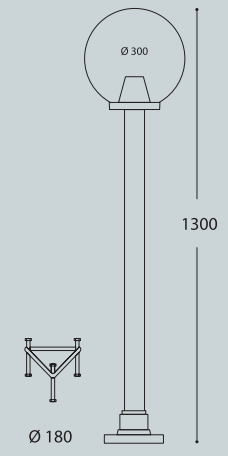

ELISSA 1400/G300 | ELISSA 1900/G300

G31.280	G31.281
Pcs 2 Kg 9,2 mc 0,200	Pcs 2 Kg 15,9 mc 0,232

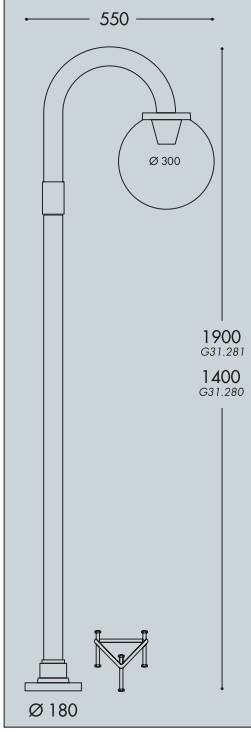

FEBO 1500/G300

G31.263

Pcs 2
Kg 13,9
mc 0,178

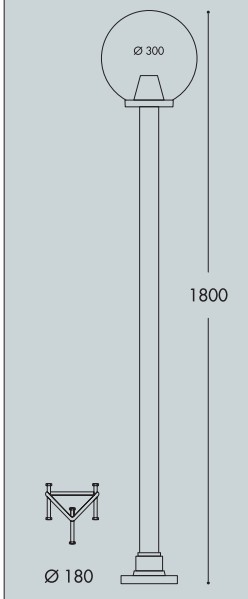

ORIONE 2450/G300 | ORIONE 2850/G300

G31.284	G31.285
Pcs 2 Kg 24,7 mc 0,225	Pcs 2 Kg 28,4 mc 0,246

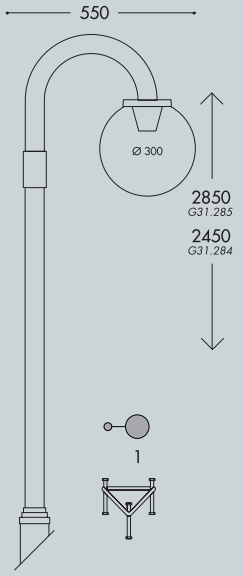

ENEA 2000 ELI/G300 3L | ENEA 2400 ELI/G300 3L

G31.264.L30	G31.265.L30
Pcs 2 Kg 36,7 mc 0,400	Pcs 2 Kg 40,4 mc 0,421

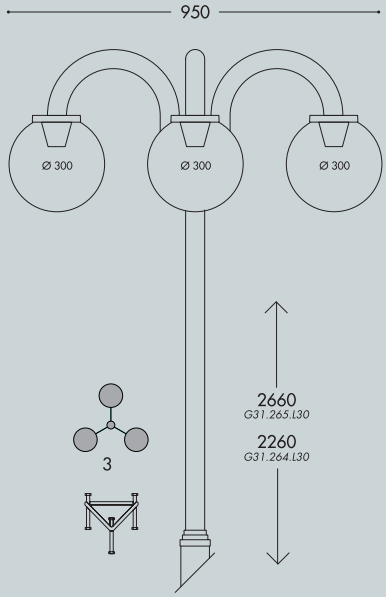

ENEA 2000/G 300 | ENEA 2400/G 300

G31.264	G31.265
Pcs 2 Kg 22,7 mc 0,171	Pcs 2 Kg 26,4 mc 0,192

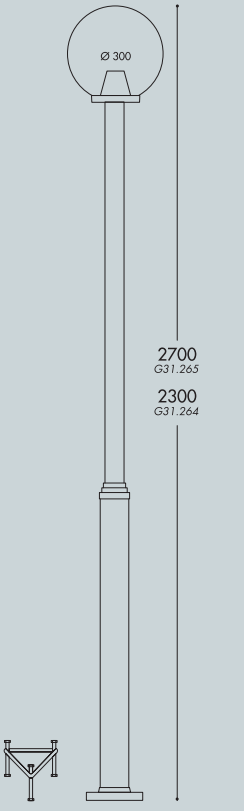

ENEA 2000 ELI/G300 2L | ENEA 2400 ELI/G300 2L

G31.264.L20	G31.265.L20
Pcs 2 Kg 33,1 mc 0,340	Pcs 2 Kg 36,8 mc 0,361

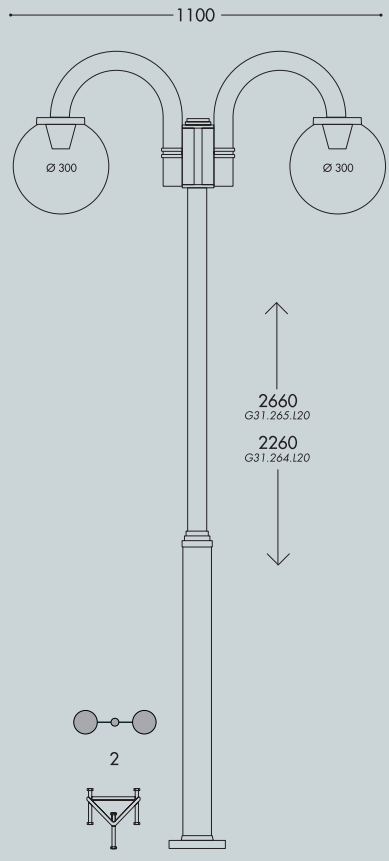



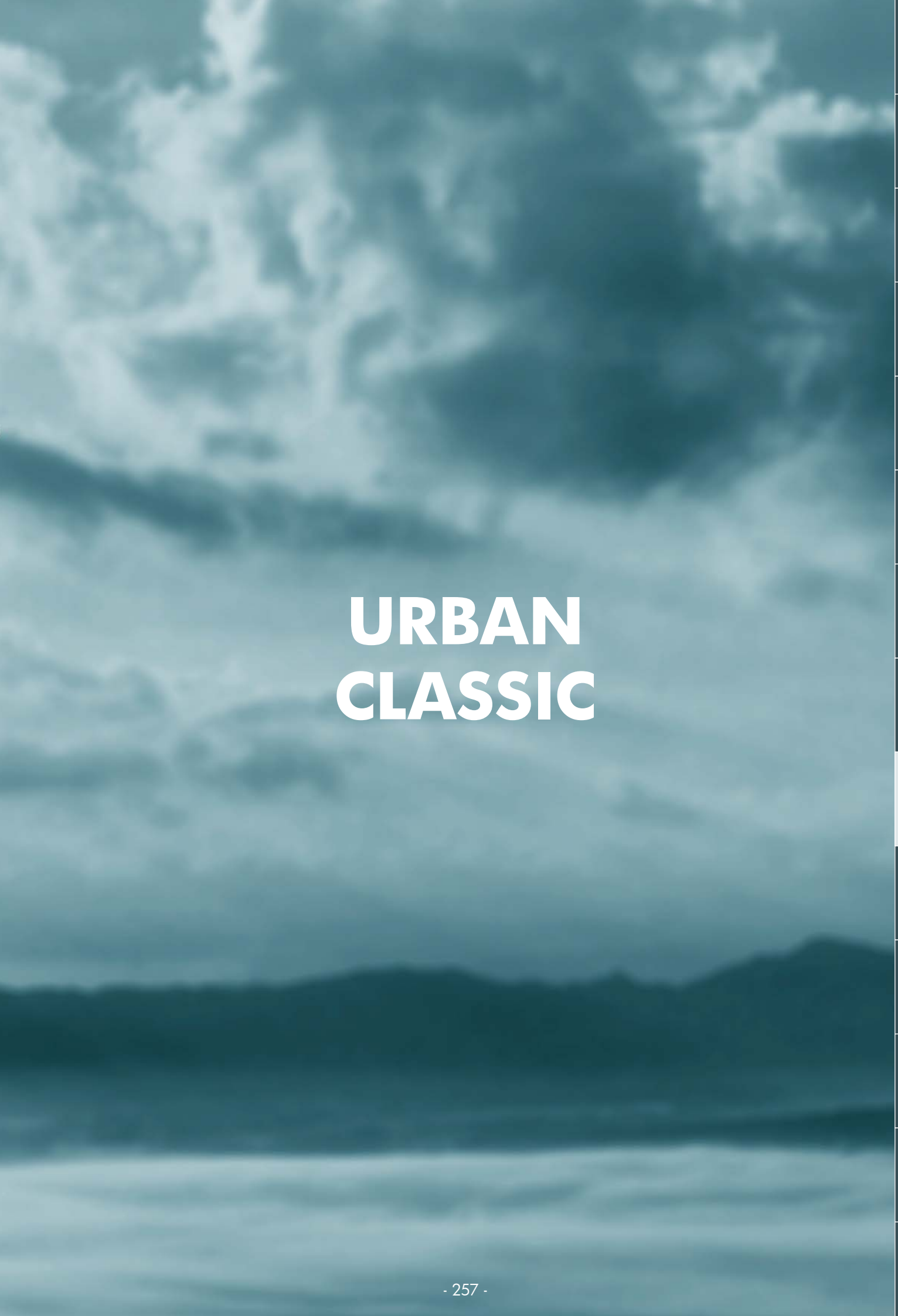

URBAN CLASSIC

NOEMI HIGH POWER LED

LARGE SIZE

Hexagonal lantern made in shockproof resin material, UV rays stabilized, rust and corrosion-free. Modular construction suitable for post top, wall and hanging installation. Provided with reflective ceiling designed to host the lighting source and equipped with TÜV approved, long-life and efficient **E27 high power LED lamp included**. Insulation class II, Protection rating IP55.

Lanterna esagonale realizzata in resina antiurto, stabilizzato ai raggi UV, inattaccabile da ruggine e corrosione. Idonea per il montaggio a palo, a sospensione o a parete. Provvista di soffitto riflettente progettato per accogliere la sorgente luminosa e fornita **completa di lampada a LED E27 ad ALTA POTENZA**, *approvata TÜV di lunga durata ed elevata efficienza. Classe di isolamento II, grado di protezione IP55*



E35.121.Q1L

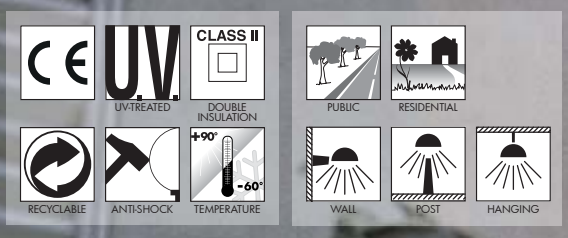

MADE IN ITALY

NOEMI HIGH POWER LED - LANTERN COMPONENTS

IP55



Decorative **PINNACLE** to be mounted on the roof top for post installation or on the lantern base for hanging installation.

***PINNACOLO** decorativo applicabile alla sommità del tetto (montaggio a palo) o sulla base della gabbia (montaggio a sospensione).*

Lantern **ROOF** made of shockproof resin material. Tool-free opening for relamping and maintenance.

***TETTO** realizzato in resina antiurto. Removibile senza l'ausilio di attrezzi per manutenzione e cambio lampadina.*

High temperature resistant reflective **CEILING** made of shockproof resin material. Provided with E27 lampholder and equipped with **HIGH POWER LED lamp**. Designed to host and protect the lighting source, granting its safe and quick installation.

***SOFFITTO** riflettente realizzato in resina antiurto ad alta resistenza al calore. Fornito completo di portalampada E27 e provvisto di lampada a **LED ad ALTA POTENZA.** Progettato per accogliere e proteggere la sorgente luminosa garantendone una veloce e sicura installazione.*

DIFFUSER of UV-rays stabilized PMMA, with recess for a power supply cable. One piece only closed at the base to ensure high protection against external agents.

***DIFFUSORE** in PMMA resistente ai raggi UV, provvisto di sede per l'alloggiamento del cavo di alimentazione. Realizzato in unico pezzo chiuso alla base per garantire un alto livello di protezione contro gli agenti esterni.*

CAGE made of shockproof resin material, UV-rays stabilized, rust and corrosion-free.

***GABBIA** realizzata in resina antiurto, stabilizzata ai raggi UV, inattaccabile da ruggine e corrosione.*

NOEMI HIGH POWER LED

E35.000 *



Dimensions and weight
Height: 530 mm
Width: 350 mm
Depth: 305 mm
Weight: 3,9 Kg
Junction to support: diameter 60 mm
Area exposed to wind pressure:
CxS = m^2 0,110

Moulded colours:
Black *White*

Painted colours:
Antique green *Antique bronze*

Diffuser PMMA:
Clear *Opal*

HIGH POWER LED



- **COST SAVING:** long-life and efficient LED light source.
- **BUILT-IN DRIVER:** quick and easy lamp replacement
- **GREAT FLEXIBILITY:** E27 standard lamp holder.
- **FUTURE-PROOFED LUMINARIES:** performances easy to upgrade to latest technology developments.
- **SUITABLE FOR OUTDOOR USE:** built-in driver fully protected against heat and humidity by silicone paste.

Lantern equipped with TÜV approved, long-life and efficient **E27 high power LED lamp**, granting the same luminous flux of traditional SON/HQI lighting sources. The lamp can be quickly and easily replaced, making the luminaries maintenance very simple.

			*ADD. SUFFIX
E27	**30 W**	**3300 Lm**	4000 K .Q1L
			3000 K .Q1R
E27	**50 W**	**5000 Lm**	4000 K .H1L
			3000 K .H1R

LED LAMPS

More technical details about TÜV approved Fumagalli LED Lamps on page 512.

** ADD THESE SUFFIXES TO THE REFERENCES MENTIONED IN THE CATALOGUE*

PHOTOMETRIC DATA SAMPLE

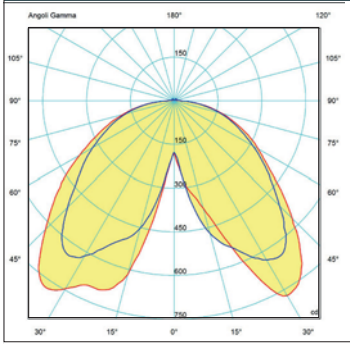

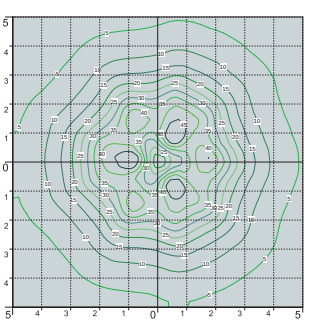

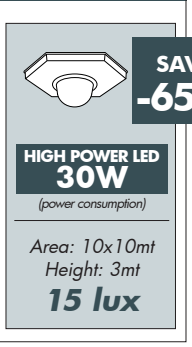

NOEMI E27



NOEMI E27

LARGE SIZE

E27 hexagonal lantern in classic style, made of shockproof resin material, UV-rays stabilized, rust and corrosion-free. Modular construction suitable for post top, hanging and wall installation. Provided with high temperature resistant ceiling suitable for ballast fixation. Insulation class II, protection rating IP 55.

Lanterna esagonale E27 in stile classico, realizzata in resina antiurto, stabilizzata ai raggi UV, inattaccabile da ruggine e corrosione. Idonea per il montaggio a palo, a sospensione o a parete. Fornita con soffitto ad alta resistenza al calore idoneo per il fissaggio dei reattori. Classe di isolamento II, grado di protezione IP55.



E35.000.N1R

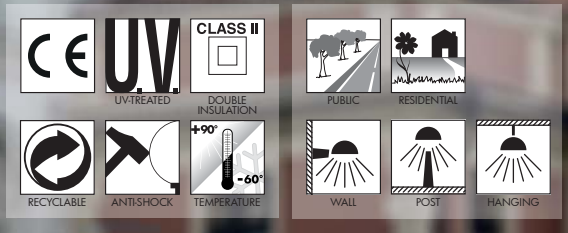

MADE IN ITALY

NOEMI E27 - LANTERN COMPONENTS

IP55



Decorative **PINNACLE** to be mounted on the roof top for post installation or on the lantern base for hanging installation.

PINNACOLO *decorativo applicabile alla sommità del tetto (montaggio a palo) o sulla base della gabbia (montaggio a sospensione).*

Lantern **ROOF** made of shockproof resin material. Tool-free opening for relamping and maintenance.

TETTO *realizzato in resina antiurto. Removibile senza l'ausilio di attrezzi per manutenzione e cambio lampadina.*

High temperature resistant reflective **CEILING** made of shockproof resin material. Provided with E27 lampholder and suitable for ballast fixation.

SOFFITTO *riflettente realizzato in resina antiurto ad alta resistenza al calore. Fornito completo di portalampada E27 e idoneo per il fissaggio dei reattori.*

DIFFUSER of UV-rays stabilized PMMA, with recess for a power supply cable. One piece only closed at the base to ensure high protection against external agents.

DIFFUSORE *in PMMA resistente ai raggi UV, provvisto di sede per l'alloggiamento del cavo di alimentazione. Realizzato in unico pezzo chiuso alla base per garantire un alto livello di protezione contro gli agenti esterni.*

CAGE made of shockproof resin material, UV-rays stabilized, rust and corrosion-free.

GABBIA *realizzata in resina antiurto, stabilizzata ai raggi UV, inattaccabile da ruggine e corrosione.*

NOEMI E27

E35.000 *



Dimensions and weight
Height: 530 mm
Width: 350 mm
Depth: 305 mm
Weight: 3,2 Kg
Junction to support: diameter 60 mm
Area exposed to wind pressure:
CxS = m² 0,110

Moulded colours:
Black White

Painted colours:
Antique green Antique bronze

Diffuser PMMA:
Clear Opal

E27



E27 lantern supplied as an option with TÜV approved, long-life and efficient **LED filament lamps suitable for outdoor use.**
Metal plate for ballast fixation available as an option (H.BAL.PLT)

				*ADD. SUFFIX
Suitable lamps: CFL-LED SON-HQI MAX 70W		**E27** lampholder only		.E27
FILAMENT LED E27	**8 W**	**1000 Lm**	4000 K	.M1L
			2700 K	.M1R
	12 W	**1500 Lm**	4000 K	.N1L
			2700 K	.N1R

LED LAMPS

More technical details about TÜV approved Fumagalli LED Lamps on page 512.

** ADD THESE SUFFIXES TO THE REFERENCES MENTIONED IN THE CATALOGUE*

PHOTOMETRIC DATA SAMPLE

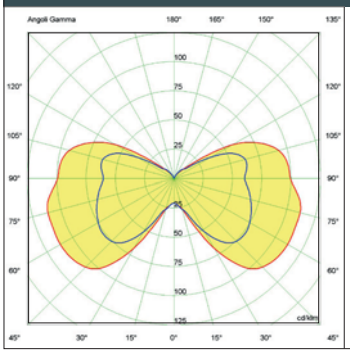

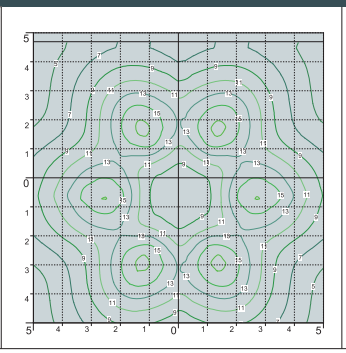

NOEMI *lantern clear SON 70W.*

POST height 3mt
10 x 10mt area: average 11 lux

The photometric data for all the versions are available upon request or on our website.

NOEMI GX53 LED

LARGE SIZE

Hexagonal lantern in classic style, made of shockproof resin material, UV-rays stabilized, rust and corrosion- free. Modular construction suitable for post top, hanging and wall installation. Equipped with TÜV approved, long-life and efficient **GX53 LED modular system** in different wattages. Insulation class II, Protection rating IP 65.

*Lanterna esagonale in stile classico, realizzata in resina antiurto, stabilizzata ai raggi UV, inattaccabile da ruggine e corrosione. Idonea per il montaggio a palo, a sospensione o a parete. Provvista di **sistema modulare a LED GX53** approvato TÜV di lunga durata ed alta efficienza disponibile in diverse potenze. Classe di isolamento II, grado di protezione IP65.*

E35.000.D3L

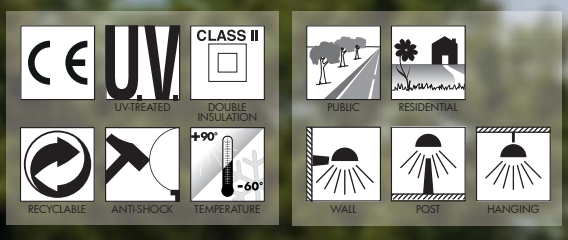

MADE IN ITALY

NOEMI GX53 LED - LANTERN COMPONENTS

IP55



Decorative **PINNACLE** to be mounted on the roof top for post installation or on the lantern base for hanging installation.

PINNACOLO *decorativo applicabile alla sommità del tetto (montaggio a palo) o sulla base della gabbia (montaggio a sospensione).*

Lantern **ROOF** made of shockproof resin material, UV-rays stabilized. Tool-free opening for relamping and maintenance.

TETTO *realizzato in resina antiurto, stabilizzata ai raggi UV. Removibile senza l'ausilio di attrezzi per manutenzione e cambio lampadina.*

DIFFUSER of UV-rays stabilized PMMA, with recess for a power supply cable. One piece only closed at the base to ensure high protection against external agents.

DIFFUSORE *in PMMA resistente ai raggi UV, provvisto di sede per l'alloggiamento del cavo di alimentazione. Realizzato in unico pezzo chiuso alla base per garantire un alto livello di protezione contro gli agenti esterni.*

CAGE made of shockproof resin material, UV-rays stabilized, rust and corrosion-free.

GABBIA *realizzata in resina antiurto, stabilizzata ai raggi UV, inattaccabile da ruggine e corrosione.*

NOEMI GX53 LED

E35.000 *



Dimensions and weight
Height: 530 mm
Width: 350 mm
Depth: 305 mm
Weight: 3,9 Kg
Junction to support: diameter 60 mm
Area exposed to wind pressure:
CxS = m^2 0,110

Moulded colours:
Black *White*

Painted colours:
Antique green *Antique bronze*

Diffuser PMMA:
Clear *Opal*

GX53 LED



- **COST SAVING:** long-life and efficient LED light sources.
- **BUILT-IN DRIVER:** quick and easy lamp replacement
- **GREAT FLEXIBILITY:** GX53 standard lamp holder.
- **FUTURE-PROOFED LUMINARIES:** performances easy to upgrade to latest technology developments.
- **SUITABLE FOR OUTDOOR USE:** built-in driver fully protected against heat and humidity by silicone paste.

Lantern supplied with white resin CEILING provided with TÜV approved, long-life and efficient **3x GX53 LED lamps included**. Each lamp can be quickly and easily replaced individually, making the luminaries maintenance very simple.



			*ADD. SUFFIX
3x 7 W **21 W**	**2400 Lm**	4000 K	.C3L
		3000 K	.C3R
3x 10 W **30 W**	**3600 Lm**	4000 K	.D3L
		3000 K	.D3R

LED LAMPS

More technical details about TÜV approved Fumagalli LED Lamps on page 512.

** ADD THESE SUFFIXES TO THE REFERENCES MENTIONED IN THE CATALOGUE*

PHOTOMETRIC DATA SAMPLE

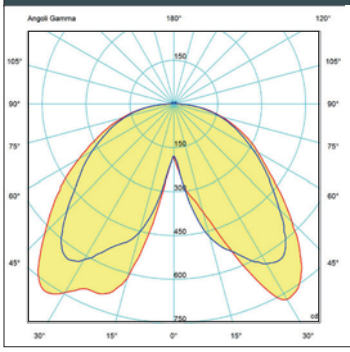

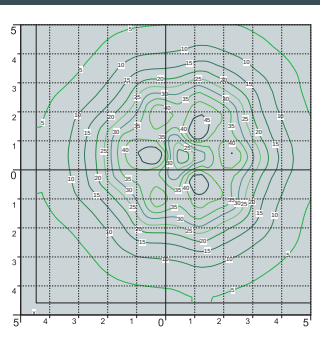

SAVE **-65%**

3x10W GX53 LED 30W *(power consumption)*

Area: 10x10mt
Height: 3mt
15 lux

=

NOEMI E27

SON 70W 84W *(power consumption)*

Area: 10x10mt
Height: 3mt
11 lux

NOEMI

LARGE SIZE













MADE IN ITALY

OFIR/NOEMI
E35.132

Pcs 1
Kg 4,6
mc 0,048

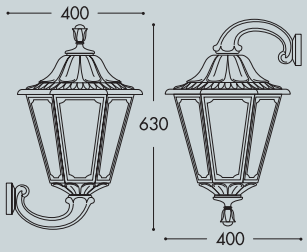

EVA/NOEMI
E35.181

Pcs 1
Kg 10,9
mc 0,168

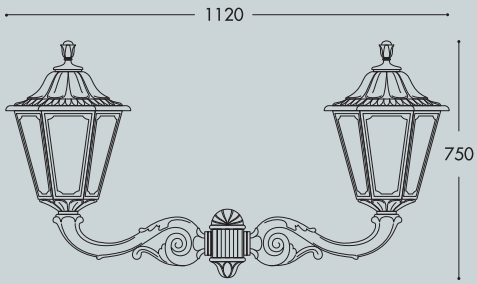

NOEMI
E35.000

Pcs 1
Kg 3,9
mc 0,043

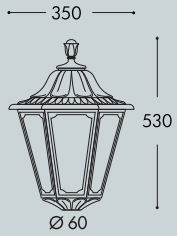

LOT/NOEMI
E35.113

Pcs 1
Kg 4,8
mc 0,061

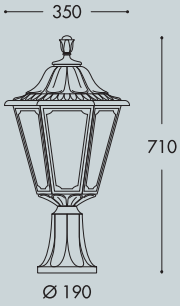

MIRRA/NOEMI
E35.142

Pcs 1
Kg 9,5
mc 0,083

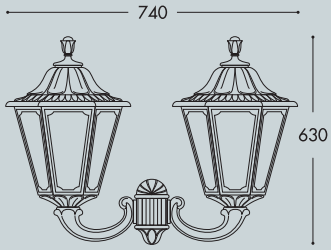

SICHEM/NOEMI
E35.121

Pcs 1
Kg 4,4
mc 0,048

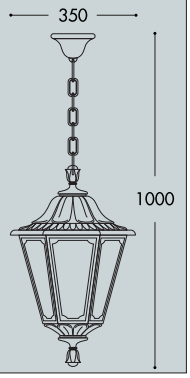

RICU/NOEMI
E35.157

Pcs 2
Kg 27,8
mc 0,310

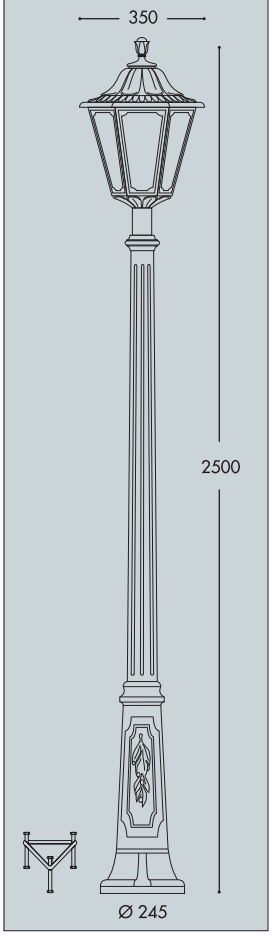

GIGI/NOEMI
E35.156

Pcs 2
Kg 26,3
mc 0,278

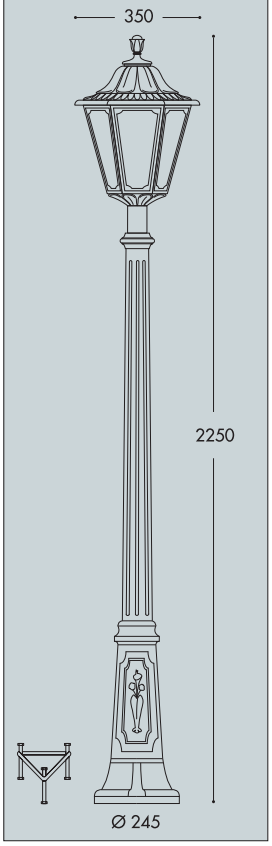

ARTU'/NOEMI
E35.158

Pcs 2
Kg 23,3
mc 0,247

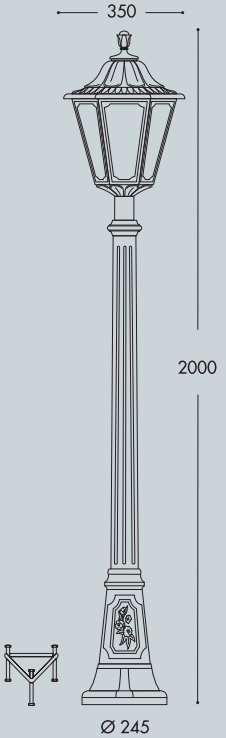

ALOE'.R/NOEMI
E35.163 resin

Pcs 2
Kg 12,8
mc 0,182

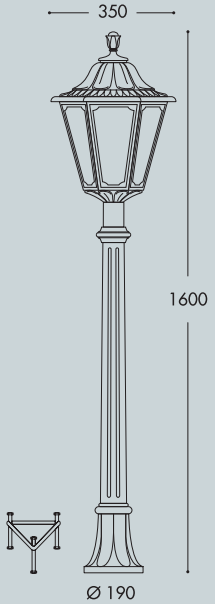

IAFET.R/NOEMI
E35.162 resin

Pcs 2
Kg 13,1
mc 0,153

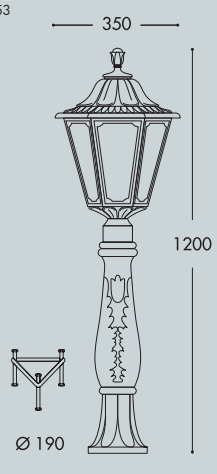

NEBO/NOEMI

LARGE SIZE





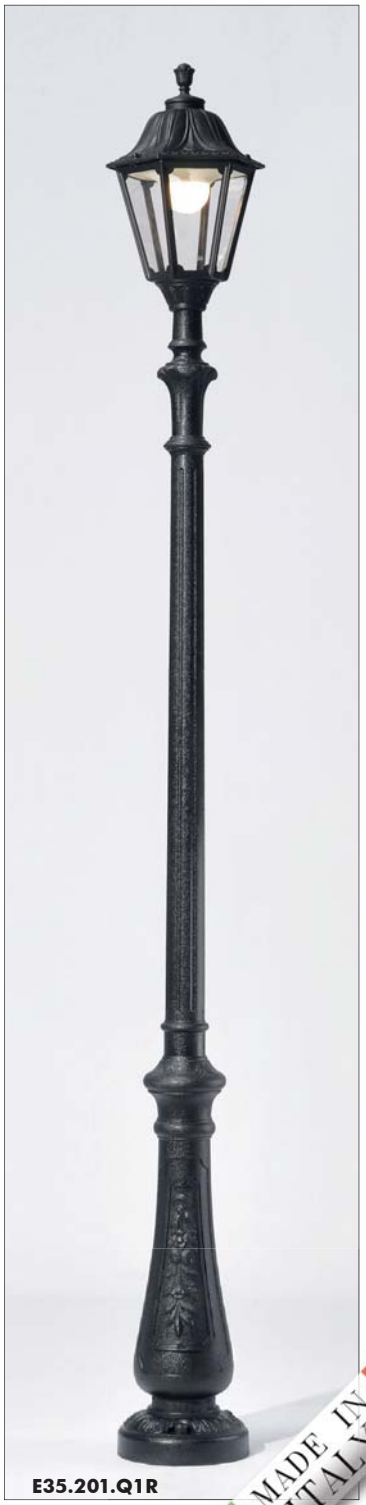

MADE IN ITALY

NEBO OFIR/NOEMI 2L

E35.201.R20

Pcs 1
Kg 31,9
mc 0,268

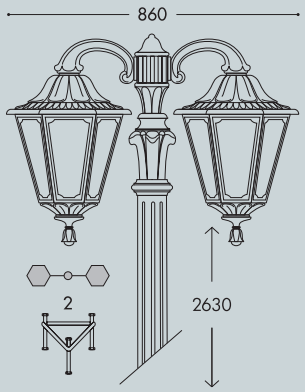

NEBO OFIR/NOEMI 3L

E35.201.R30

Pcs 1
Kg 35,8
mc 0,342

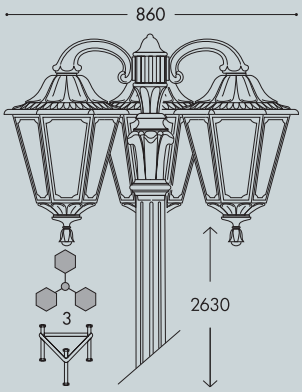

NEBO/NOEMI

E35.201

Pcs 1
Kg 24,9
mc 0,196

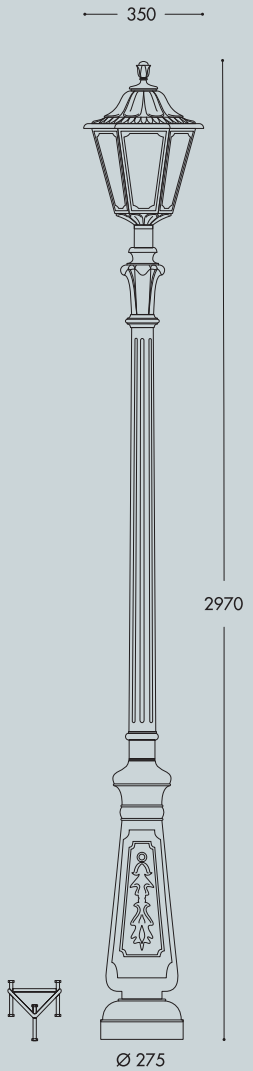

NEBO OFIR/NOEMI 2L

E35.201.R20

Pcs 1
Kg 31,9
mc 0,268

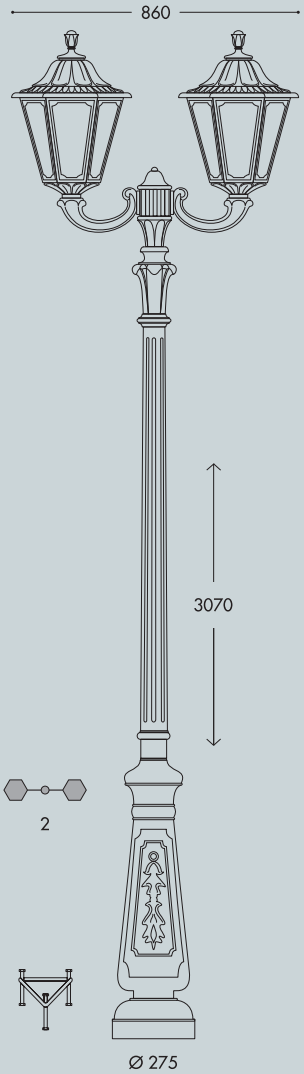

NEBO OFIR/NOEMI 3L

E35.201.R30

Pcs 1
Kg 35,8
mc 0,342

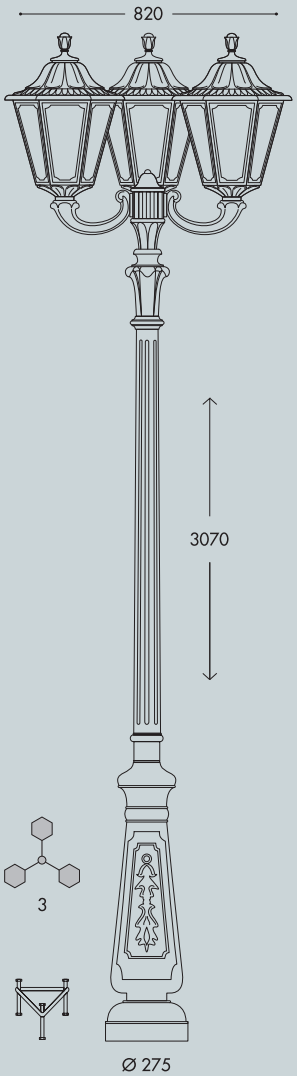

TABOR/NOEMI

LARGE SIZE







MADE IN ITALY

TABOR OFIR/NOEMI 2L

E35.204.R20

Pcs 1
Kg 36,4
mc 0,295

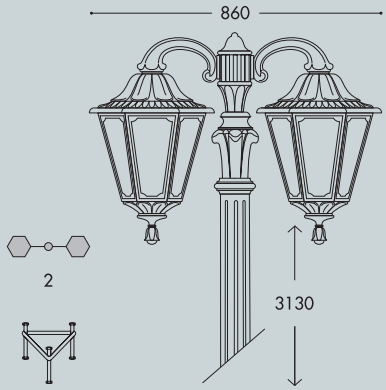

TABOR OFIR/NOEMI 3L

E35.204.R30

Pcs 1
Kg 39,5
mc 0,369

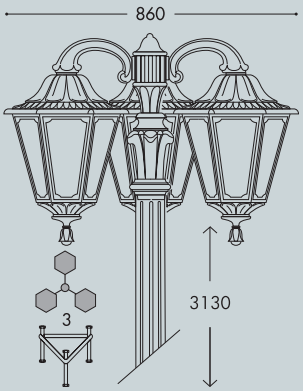

TABOR/NOEMI

E35.204

Pcs 1
Kg 29,4
mc 0,223

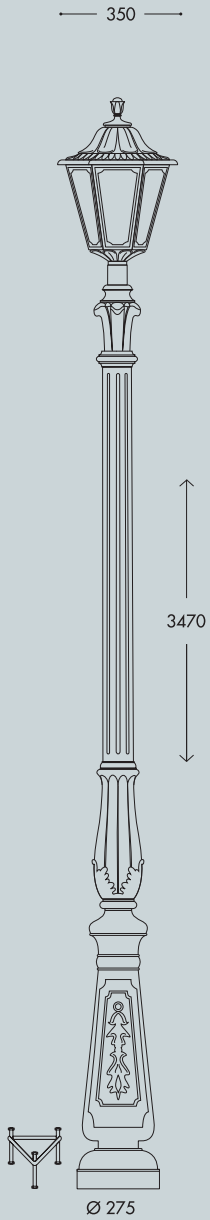

TABOR OFIR/NOEMI 2L

E35.204.R20

Pcs 1
Kg 36,4
mc 0,295

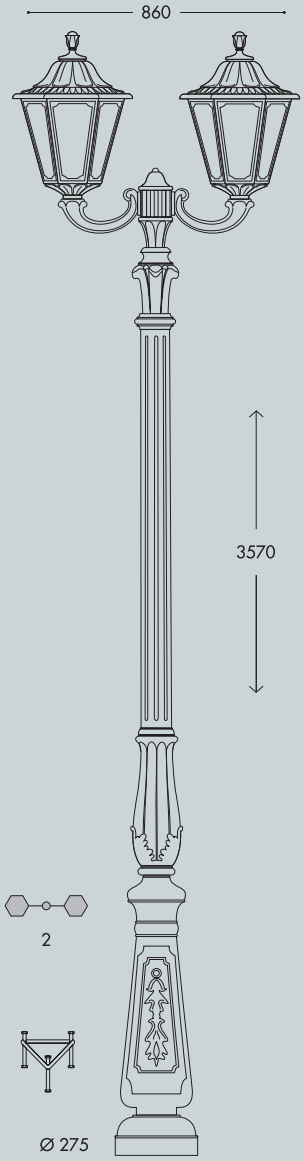

TABOR OFIR/NOEMI 3L

E35.204.R30

Pcs 1
Kg 39,5
mc 0,369

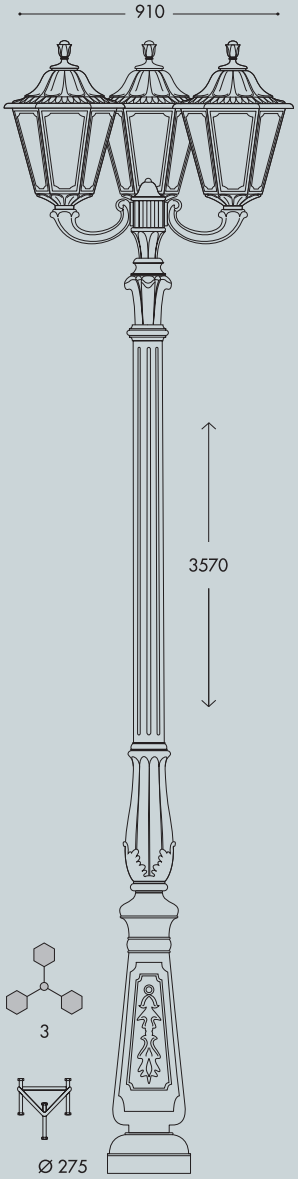

HOREB/NOEMI

LARGE SIZE

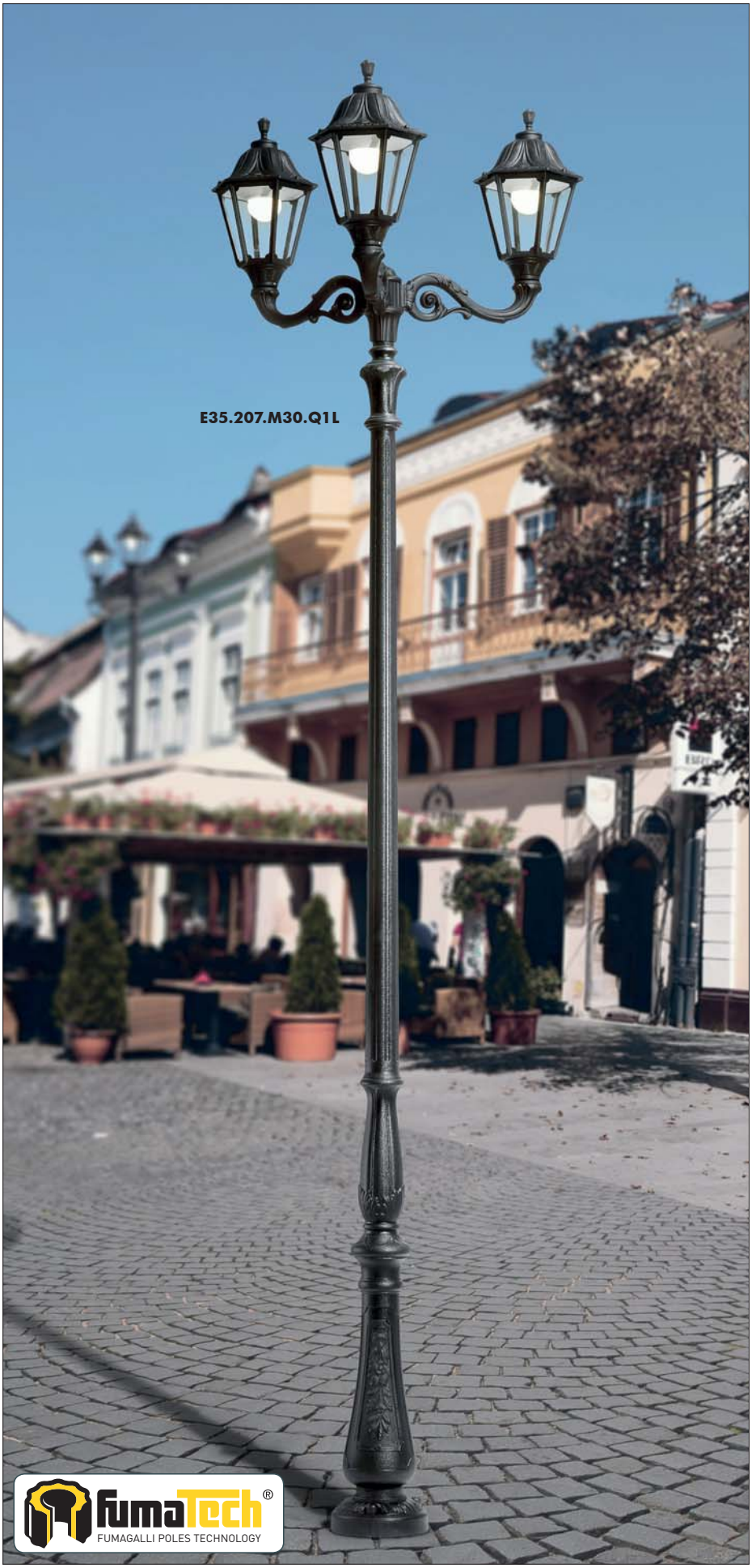





MADE IN ITALY

HOREB ADAM/NOEMI 1L

E35.207.M10

Pcs 1
Kg 33,8
mc 0,280

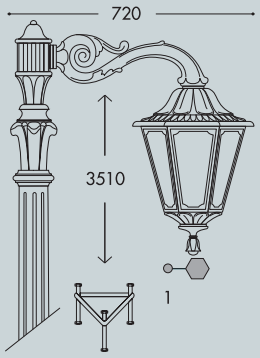

ADAM/NOEMI

E35.171

Pcs 1
Kg 5,3
mc 0,083

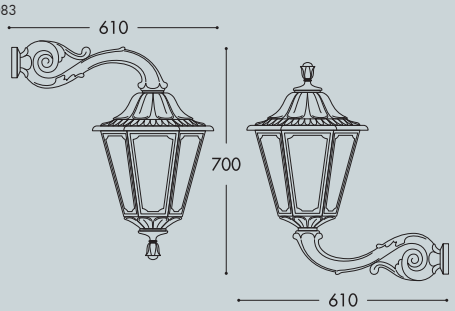

HOREB ADAM/NOEMI 3+1

E35.207.M31

Pcs 1
Kg 48
mc 0,476

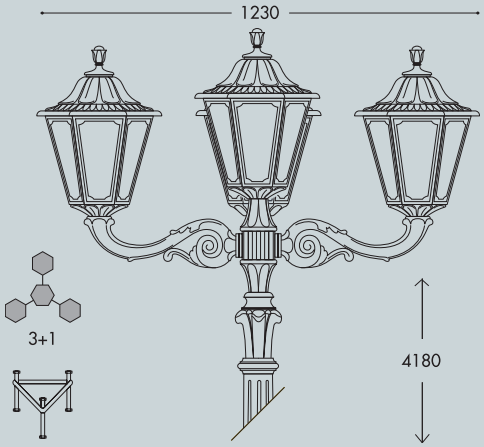

HOREB ADAM/NOEMI 2+1

E35.207.M21

Pcs 1
Kg 43
mc 0,404

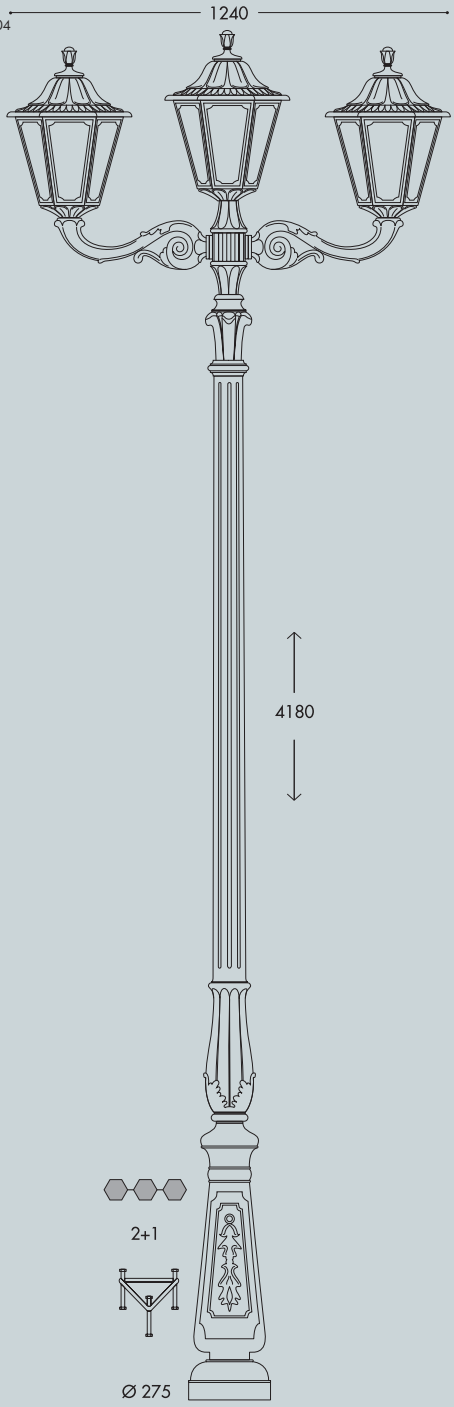

HOREB/NOEMI

E35.207

Pcs 1
Kg 31,9
mc 0,249

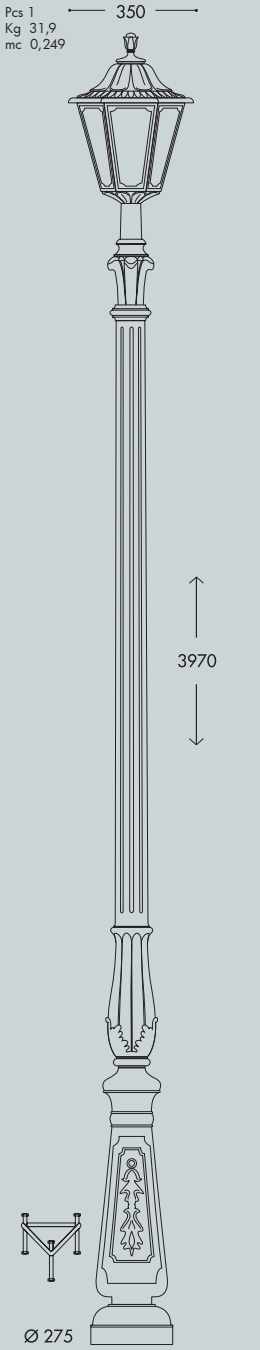

HOREB ADAM/NOEMI 3L

E35.207.M30

Pcs 1
Kg 44,1
mc 0,414

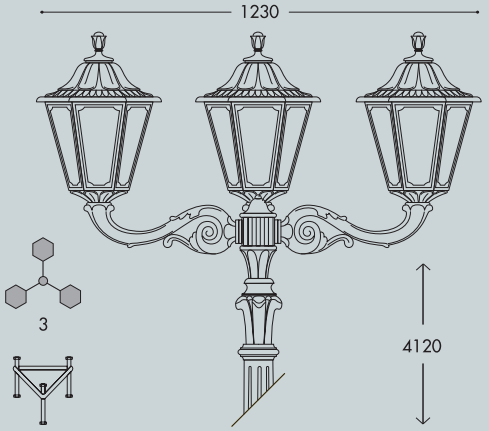

HOREB ADAM/NOEMI 2L

E35.207.M20

Pcs 1
Kg 38,8
mc 0,342

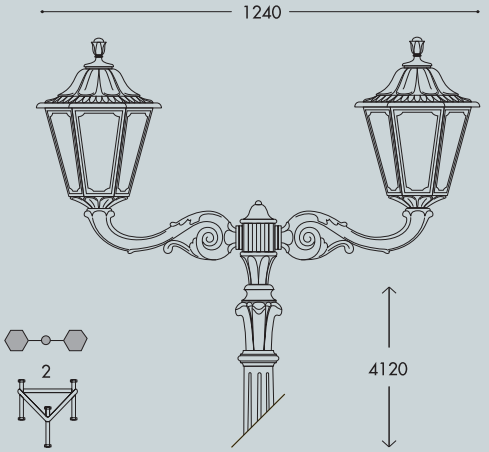

KARMEL 3000/NOEMI

LARGE SIZE

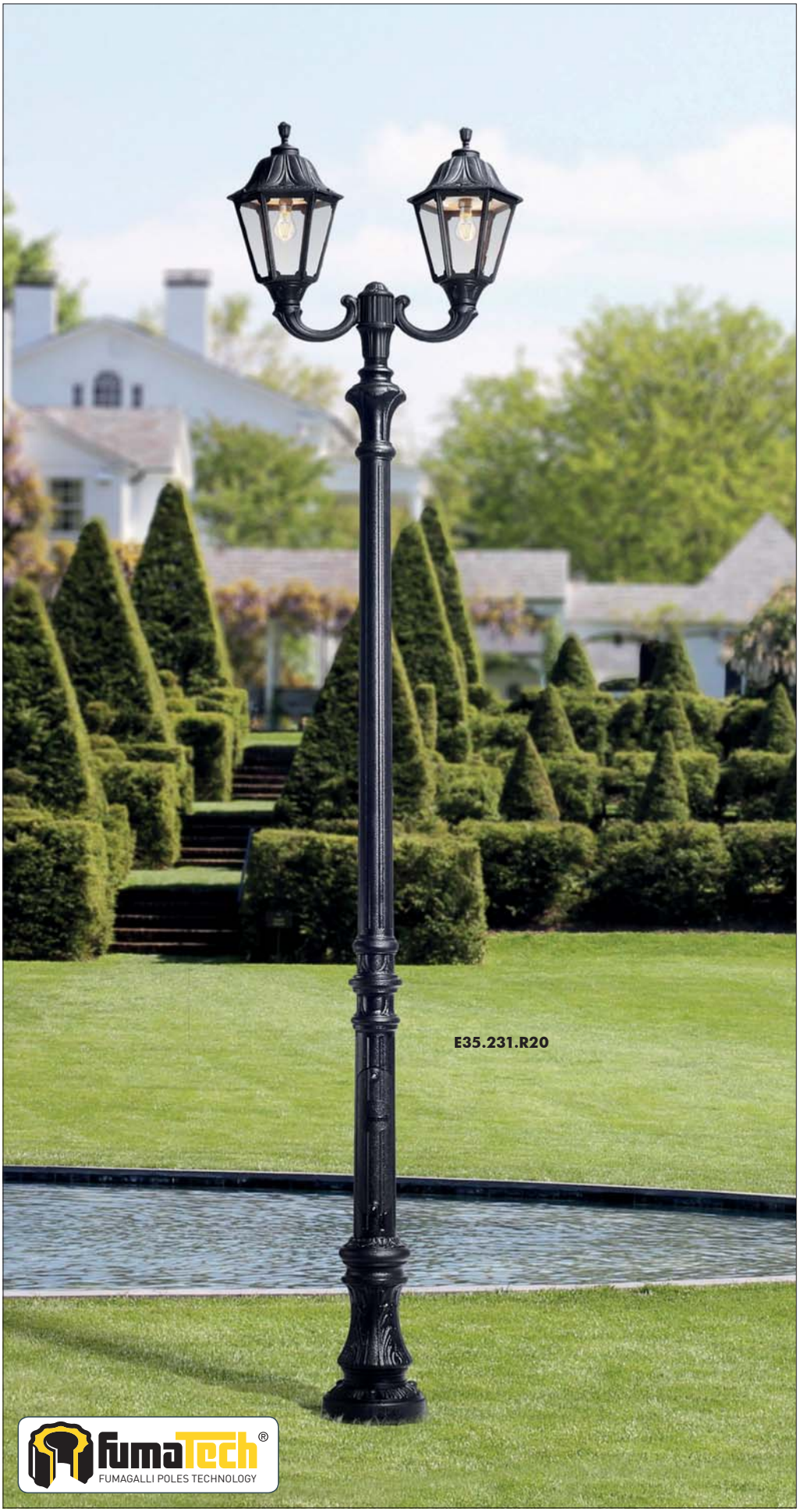





MADE IN ITALY

KARMEL 3000 OFIR/NOEMI 2L

E35.231.R20

Pcs 1
Kg 36,4
mc 0,295

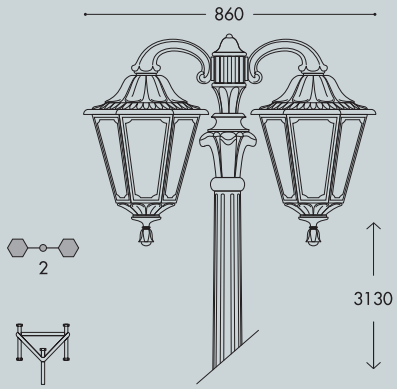

KARMEL 3000 OFIR/NOEMI 3L

E35.231.R30

Pcs 1
Kg 39,5
mc 0,369

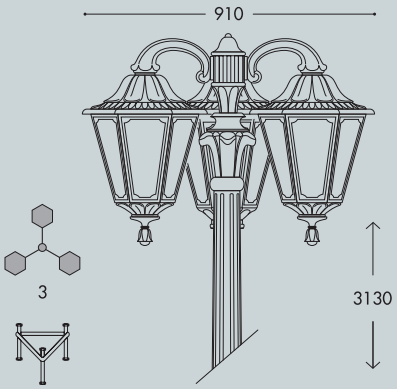

KARMEL 3000/NOEMI

E35.231

Pcs 1
Kg 29,4
mc 0,223

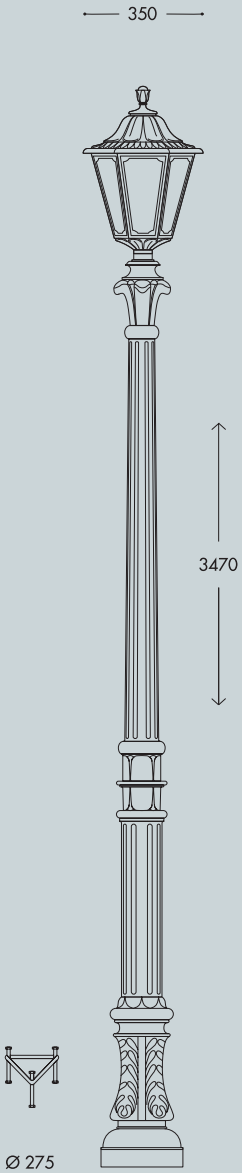

KARMEL 3000 OFIR/NOEMI 2L

E35.231.R20

Pcs 1
Kg 36,4
mc 0,295

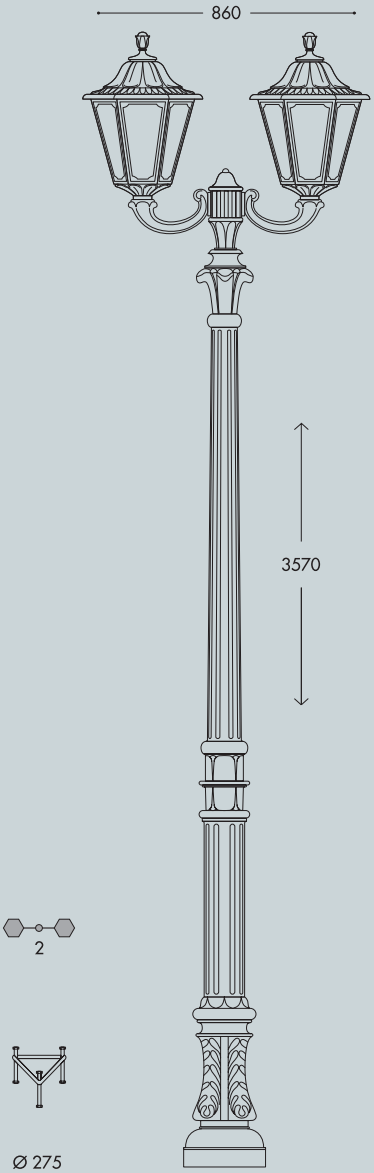

KARMEL 3000 OFIR/NOEMI 3L

E35.231.R30

Pcs 1
Kg 39,5
mc 0,369

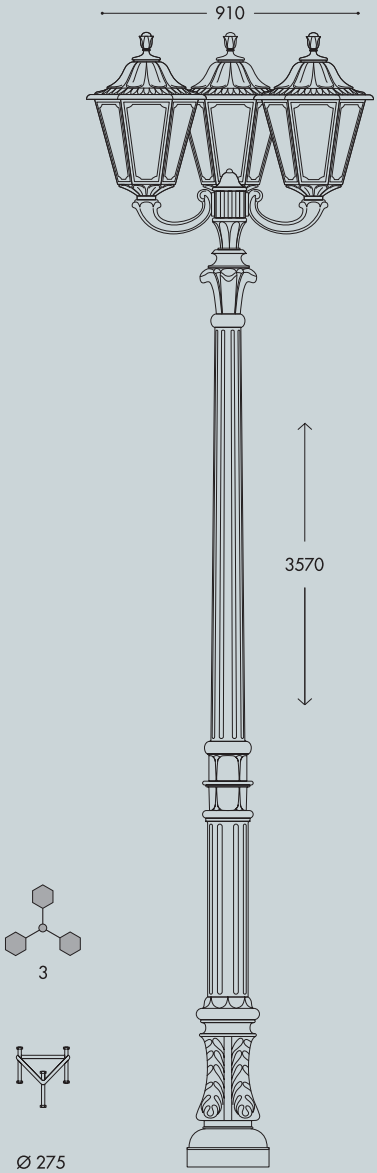

KARMEL 3500-4000/NOEMI

LARGE SIZE







MADE IN ITALY

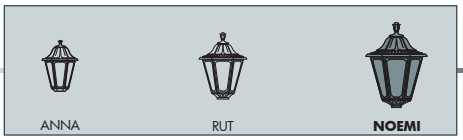

KARMEL 3500-4000/NOEMI

LARGE SIZE

KARMEL 3500 ADAM/NOEMI 1L	KARMEL 4000 ADAM/NOEMI 1L
E35.234.M10	E35.237.M10

Pcs 1 Kg 33,8 mc 0,280 — Pcs 1 Kg 36,3 mc 0,287

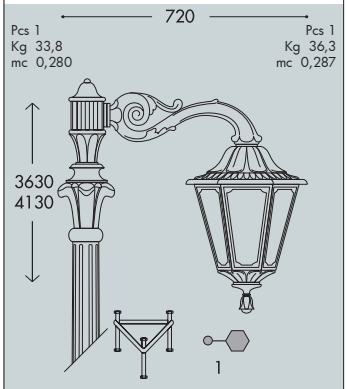

KARMEL 3500/NOEMI
E35.234

Pcs 1 Kg 31,9 mc 0,249

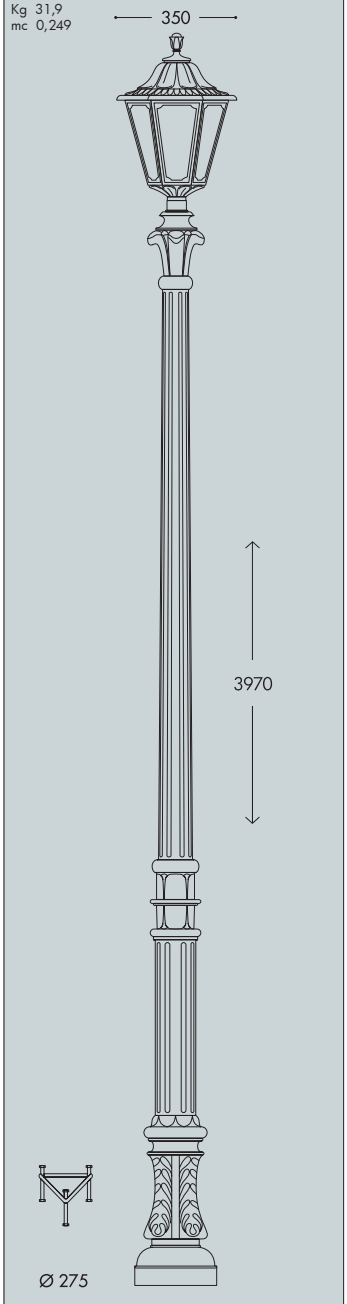

KARMEL 3500 ADAM/NOEMI 2+1	KARMEL 4000 ADAM/NOEMI 2+1
E35.234.M21	E35.237.M21

Pcs 1 Kg 43 mc 0,404 — Pcs 1 Kg 45,5 mc 0,431

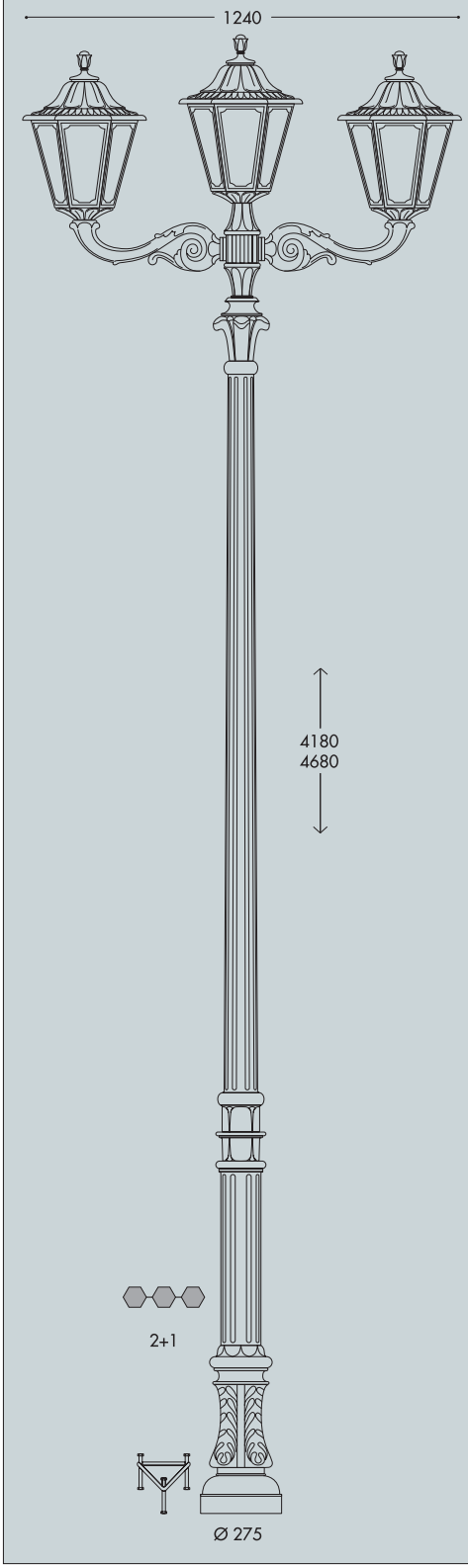

KARMEL 3500 ADAM/NOEMI 3L	KARMEL 4000 ADAM/NOEMI 3L
E35.234.M30	E35.237.M30

Pcs 1 Kg 44,1 mc 0,414 — Pcs 1 Kg 46,6 mc 0,441

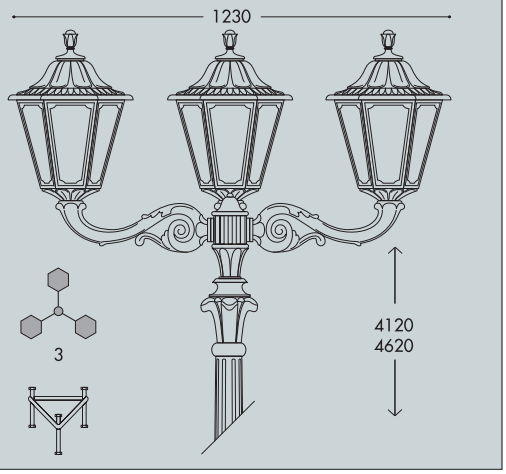

KARMEL 3500 ADAM/NOEMI 3+1	KARMEL 4000 ADAM/NOEMI 3+1
E35.234.M31	E35.237.M31

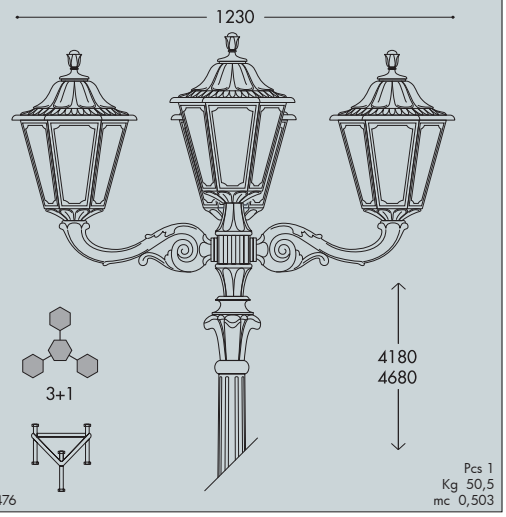

Pcs 1 Kg 48 mc 0,476 — Pcs 1 Kg 50,5 mc 0,503

KARMEL 3500 ADAM/NOEMI 2L	KARMEL 4000 ADAM/NOEMI 2L
E35.234.M20	E35.237.M20

Pcs 1 Kg 38,8 mc 0,342 — Pcs 1 Kg 41,3 mc 0,369

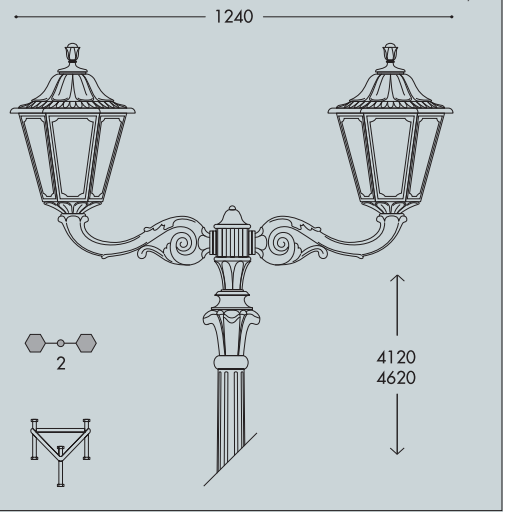

SILOE HIGH POWER LED

LARGE SIZE

Hexagonal lantern made in shockproof resin material, UV rays stabilized, rust and corrosion-free. Modular construction suitable for post top, wall and hanging installation. Provided with reflective ceiling designed to host the lighting source and equipped with TÜV approved, long-life and efficient **E27 high power LED lamp included**. Insulation class II, Protection rating IP55.

Lanterna esagonale realizzata in resina antiurto, stabilizzato ai raggi UV, inattaccabile da ruggine e corrosione. Idonea per il montaggio a palo, a sospensione o a parete. Provvista di soffitto riflettente progettato per accogliere la sorgente luminosa e fornita **completa di lampada a LED E27 ad ALTA POTENZA**, *approvata TÜV di lunga durata ed elevata efficienza. Classe di isolamento II, grado di protezione IP55*

K35.132.Q1L

E27 HIGH POWER LED

INDOOR & OUTDOOR USE

+80°C -30°

90% HUMIDITY

VOLTAGE SURGE RESISTANT

DRIVER SILICONE PROTECTION



CE UV-TREATED DOUBLE INSULATION CLASS II

RECYCLABLE ANTI-SHOCK +90° -60° TEMPERATURE

PUBLIC RESIDENTIAL

WALL POST HANGING

MADE IN ITALY

SILOE HIGH POWER LED - LANTERN COMPONENTS

IP55



Decorative **PINNACLE** to be mounted on the roof top for post installation or on the lantern base for hanging installation.

PINNACOLO *decorativo applicabile alla sommità del tetto (montaggio a palo) o sulla base della gabbia (montaggio a sospensione).*

Lantern **ROOF** made of shockproof resin material. Tool-free opening for relamping and maintenance.

TETTO *realizzato in resina antiurto. Removibile senza l'ausilio di attrezzi per manutenzione e cambio lampadina.*

High temperature resistant reflective **CEILING** made of shockproof resin material. Provided with E27 lampholder and equipped with **HIGH POWER LED lamp**. Designed to host and protect the lighting source, granting its safe and quick installation.

SOFFITTO *riflettente realizzato in resina antiurto ad alta resistenza al calore. Fornito completo di portalampada E27 e provvisto di lampada a* ***LED ad ALTA POTENZA.*** *Progettato per accogliere e proteggere la sorgente luminosa garantendone una veloce e sicura installazione.*

DIFFUSER of UV-rays stabilized PMMA, with recess for a power supply cable. One piece only closed at the base to ensure high protection against external agents.

DIFFUSORE *in PMMA resistente ai raggi UV, provvisto di sede per l'alloggiamento del cavo di alimentazione. Realizzato in unico pezzo chiuso alla base per garantire un alto livello di protezione contro gli agenti esterni.*

CAGE made of shockproof resin material, UV-rays stabilized, rust and corrosion-free.

GABBIA *realizzata in resina antiurto, stabilizzata ai raggi UV, inattaccabile da ruggine e corrosione.*

SILOE HIGH POWER LED

K35.000 *



Dimensions and weight
Height: 530 mm
Width: 350 mm
Depth: 305 mm
Weight: 3,9 Kg
Junction to support: diameter 60 mm
Area exposed to wind pressure:
CxS = m² 0,113

Moulded colours:
Black *White*

Painted colours:
Antique green *Antique bronze*

Diffuser PMMA:
Clear *Opal*

HIGH POWER LED



- **COST SAVING:** long-life and efficient LED light source.
- **BUILT-IN DRIVER:** quick and easy lamp replacement
- **GREAT FLEXIBILITY:** E27 standard lamp holder.
- **FUTURE-PROOFED LUMINARIES:** performances easy to upgrade to latest technology developments.
- **SUITABLE FOR OUTDOOR USE:** built-in driver fully protected against heat and humidity by silicone paste.

Lantern equipped with TÜV approved, long-life and efficient **E27 high power LED lamp**, granting the same luminous flux of traditional SON/HQI lighting sources. The lamp can be quickly and easily replaced, making the luminaries maintenance very simple.

			*ADD. SUFFIX
E27	30 W	3300 Lm	4000 K .Q1L
			3000 K .Q1R
E27	50 W	5000 Lm	4000 K .H1L
			3000 K .H1R

LED LAMPS

More technical details about TÜV approved Fumagalli LED Lamps on page 512.

** ADD THESE SUFFIXES TO THE REFERENCES MENTIONED IN THE CATALOGUE*

PHOTOMETRIC DATA SAMPLE

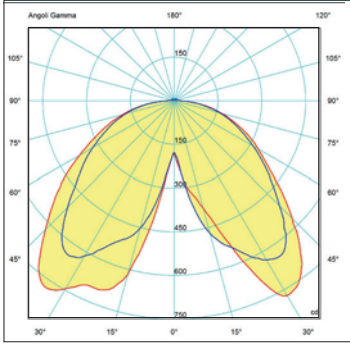

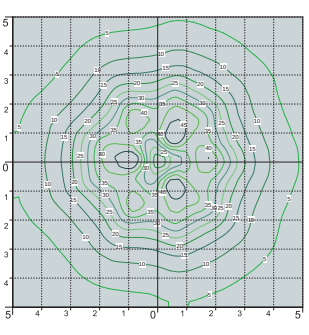

SAVE -65%

HIGH POWER LED 30W (power consumption)

Area: 10x10mt
Height: 3mt
15 lux

=

SILOE E27

SON 70W 84W (power consumption)

Area: 10x10mt
Height: 3mt
11 lux

SILOE E27

LARGE SIZE

E27 hexagonal lantern in classic style, made of shockproof resin material, UV-rays stabilized, rust and corrosion-free. Modular construction suitable for post top, hanging and wall installation. Provided with high temperature resistant ceiling suitable for ballast fixation. Insulation class II, protection rating IP 55.

Lanterna esagonale E27 in stile classico, realizzata in resina antiurto, stabilizzata ai raggi UV, inattaccabile da ruggine e corrosione. Idonea per il montaggio a palo, a sospensione o a parete. Fornita con soffitto ad alta resistenza al calore idoneo per il fissaggio dei reattori. Classe di isolamento II, grado di protezione IP55.



K35.000.N1R

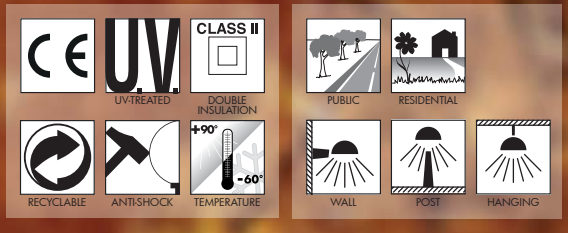

MADE IN ITALY

SILOE E27 - LANTERN COMPONENTS

IP55



Decorative **PINNACLE** to be mounted on the roof top for post installation or on the lantern base for hanging installation.

PINNACOLO *decorativo applicabile alla sommità del tetto (montaggio a palo) o sulla base della gabbia (montaggio a sospensione).*

Lantern **ROOF** made of shockproof resin material. Tool-free opening for relamping and maintenance.

TETTO *realizzato in resina antiurto. Removibile senza l'ausilio di attrezzi per manutenzione e cambio lampadina.*

High temperature resistant reflective **CEILING** made of shockproof resin material. Provided with E27 lampholder and suitable for ballast fixation.

SOFFITTO *riflettente realizzato in resina antiurto ad alta resistenza al calore. Fornito completo di portalampada E27 e idoneo per il fissaggio dei reattori.*

DIFFUSER of UV-rays stabilized PMMA, with recess for a power supply cable. One piece only closed at the base to ensure high protection against external agents.

DIFFUSORE *in PMMA resistente ai raggi UV, provvisto di sede per l'alloggiamento del cavo di alimentazione. Realizzato in unico pezzo chiuso alla base per garantire un alto livello di protezione contro gli agenti esterni.*

CAGE made of shockproof resin material, UV-rays stabilized, rust and corrosion-free.

GABBIA *realizzata in resina antiurto, stabilizzata ai raggi UV, inattaccabile da ruggine e corrosione.*

SILOE E27

K35.000 *



Dimensions and weight
Height: 530 mm
Width: 350 mm
Depth: 305 mm
Weight: 3,2 Kg
Junction to support: diameter 60 mm
Area exposed to wind pressure:
CxS = m^2 0,113

Moulded colours:
Black *White*
Painted colours:
Antique green *Antique bronze*
Diffuser PMMA:
Clear *Opal*

E27



E27 lantern supplied as an option with TÜV approved, long-life and efficient **LED filament lamps suitable for outdoor use.**
Metal plate for ballast fixation available as an option (H.BAL.PLT)

				*ADD. SUFFIX
Suitable lamps: CFL-LED SON-HQI MAX 70W		**E27** lampholder only		.E27
FILAMENT LED E27	**8 W**	**1000 Lm**	4000 K	.M1L
			2700 K	.M1R
	12 W	**1500 Lm**	4000 K	.N1L
			2700 K	.N1R

LED LAMPS

More technical details about TÜV approved Fumagalli LED Lamps on page 512.

** ADD THESE SUFFIXES TO THE REFERENCES MENTIONED IN THE CATALOGUE*

PHOTOMETRIC DATA SAMPLE

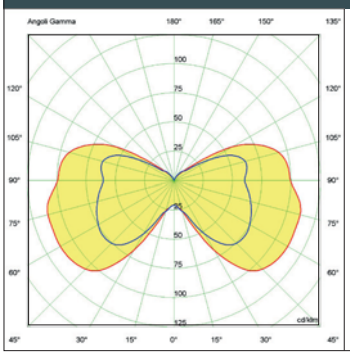

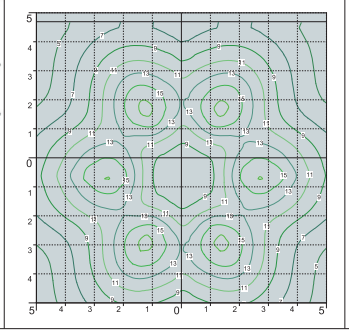

SILOE *lantern clear SON 70W.*

POST height 3mt
10 x 10mt area: average 11 lux

The photometric data for all the versions are available upon request or on our website.

SILOE GX53 LED

LARGE SIZE

Hexagonal lantern in classic style, made of shockproof resin material, UV-rays stabilized, rust and corrosion- free. Modular construction suitable for post top, hanging and wall installation. Equipped with TÜV approved, long-life and efficient **GX53 LED modular system** in different wattages. Insulation class II, Protection rating IP 65.

*Lanterna esagonale in stile classico, realizzata in resina antiurto, stabilizzata ai raggi UV, inattaccabile da ruggine e corrosione. Idonea per il montaggio a palo, a sospensione o a parete. Provvista di **sistema modulare a LED GX53** approvato TÜV di lunga durata ed alta efficienza disponibile in diverse potenze. Classe di isolamento II, grado di protezione IP65.*

K35.000.D3L

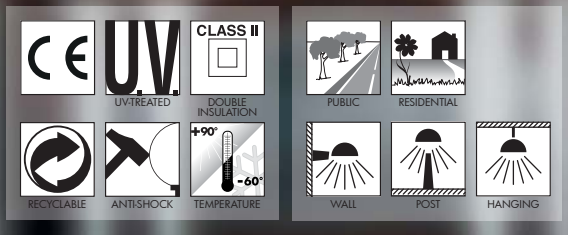

MADE IN ITALY

SILOE GX53 LED - LANTERN COMPONENTS

IP55



Decorative **PINNACLE** to be mounted on the roof top for post installation or on the lantern base for hanging installation.

PINNACOLO *decorativo applicabile alla sommità del tetto (montaggio a palo) o sulla base della gabbia (montaggio a sospensione).*

Lantern **ROOF** made of shockproof resin material. Tool-free opening for relamping and maintenance.

TETTO *realizzato in resina antiurto. Removibile senza l'ausilio di attrezzi per manutenzione e cambio lampadina.*

DIFFUSER of UV-rays stabilized polymethylmethacrylate (PMMA), with recess for a power supply cable, available in clear or opal colour. One piece only closed at the base to ensure high protection against external agents.

DIFFUSORE *in polimetilmetacrilato resistente ai raggi UV, disponibile in colore trasparente od opale, provvisto di sede per l'alloggiamento del cavo di alimentazione. Realizzato in unico pezzo chiuso alla base per garantire un alto livello di protezione contro gli agenti esterni.*

CAGE made of shockproof resin material, UV-rays stabilized, rust and corrosion-free.

GABBIA *realizzata in resina antiurto, stabilizzata ai raggi UV, inattaccabile da ruggine e corrosione.*

SILOE GX53 LED

K35.000 *



Dimensions and weight
Height: 530 mm
Width: 350 mm
Depth: 305 mm
Weight: 3,9 Kg
Junction to support: diameter 60 mm
Area exposed to wind pressure:
CxS = m² 0,113

Moulded colours:
Black *White*

Painted colours:
Antique green *Antique bronze*

Diffuser PMMA:
Clear *Opal*

GX53 LED



- **COST SAVING:** long-life and efficient LED light sources.
- **BUILT-IN DRIVER:** quick and easy lamp replacement
- **GREAT FLEXIBILITY:** GX53 standard lamp holder.
- **FUTURE-PROOFED LUMINARIES:** performances easy to upgrade to latest technology developments.
- **SUITABLE FOR OUTDOOR USE:** built-in driver fully protected against heat and humidity by silicone paste.

Lantern supplied with white resin CEILING provided with TÜV approved, long-life and efficient **3x GX53 LED lamps included**. Each lamp can be quickly and easily replaced individually, making the luminaries maintenance very simple.


GX53 LED

			*ADD. SUFFIX
3x 7 W **21 W**	**2400 Lm**	4000 K	.C3L
		3000 K	.C3R
3x 10 W **30 W**	**3600 Lm**	4000 K	.D3L
		3000 K	.D3R

LED LAMPS

More technical details about TÜV approved Fumagalli LED Lamps on page 512.

** ADD THESE SUFFIXES TO THE REFERENCES MENTIONED IN THE CATALOGUE*

PHOTOMETRIC DATA SAMPLE

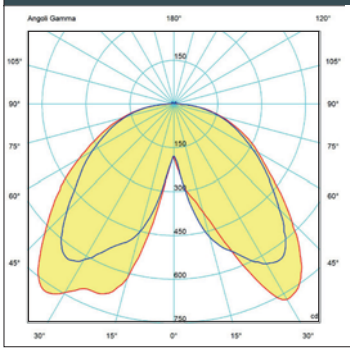

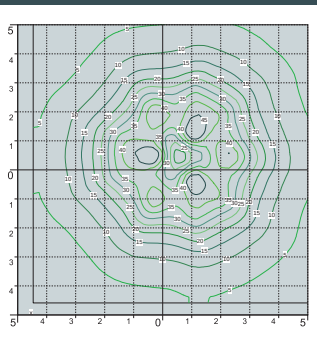

SAVE **-65%**

3x10W GX53 LED 30W *(power consumption)*

Area: 10x10mt
Height: 3mt
15 lux

=

SILOE E27

SON 70W 84W *(power consumption)*

Area: 10x10mt
Height: 3mt
11 lux

SILOE

LARGE SIZE



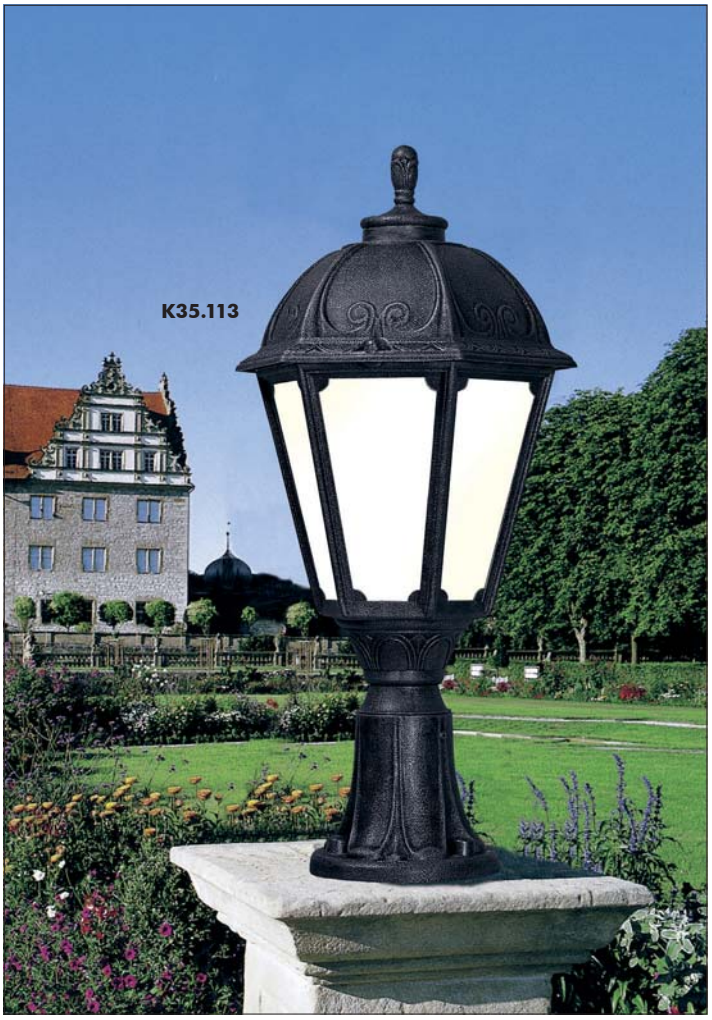







MADE IN ITALY

OFIR/SILOE
K35.132

Pcs 1
Kg 4,6
mc 0,048

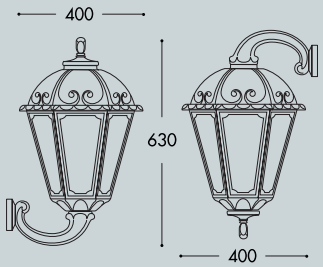

EVA/SILOE
K35.181

Pcs 1
Kg 10,9
mc 0,168

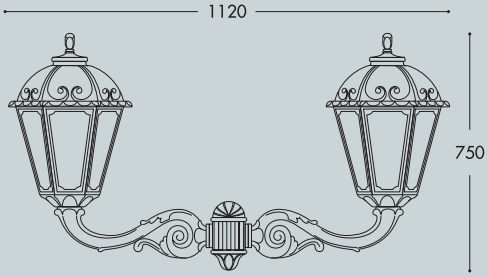

SILOE
K35.000

Pcs 1
Kg 3,9
mc 0,043

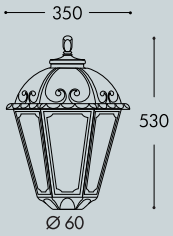

LOT/SILOE
K35.113

Pcs 1
Kg 4,8
mc 0,061

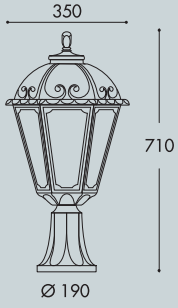

MIRRA/SILOE
K35.142

Pcs 1
Kg 9,5
mc 0,083

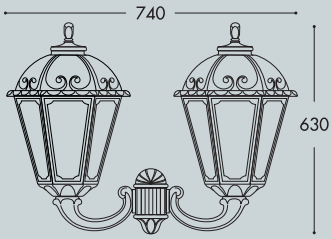

SICHEM/SILOE
K35.121

Pcs 1
Kg 4,4
mc 0,048

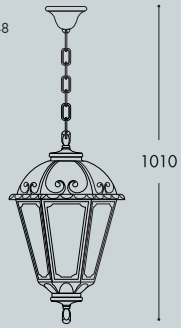

RICU/SILOE
K35.157

Pcs 2
Kg 27,8
mc 0,310

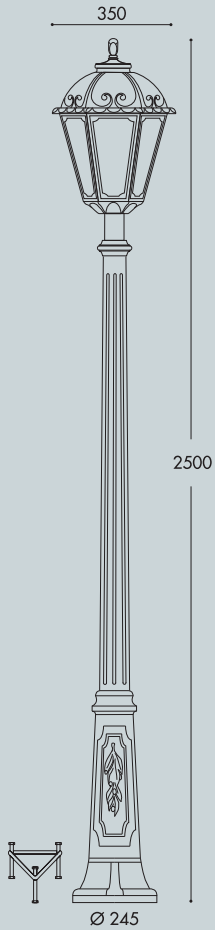

GIGI/SILOE
K35.156

Pcs 2
Kg 26,3
mc 0,278

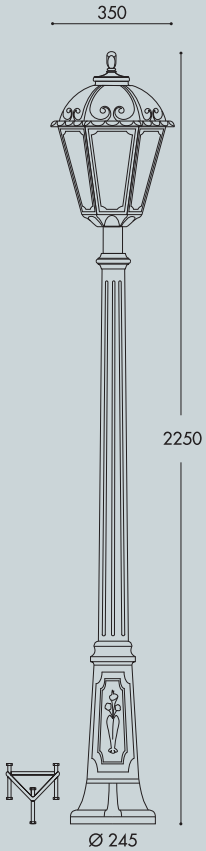

ARTU'/SILOE
K35.158

Pcs 2
Kg 23,3
mc 0,247

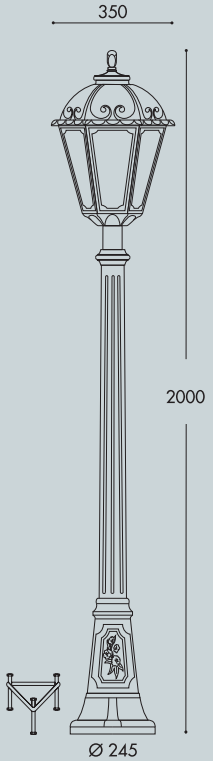

ALOE'.R/SILOE
K35.163 resin

Pcs 2
Kg 12,8
mc 0,182

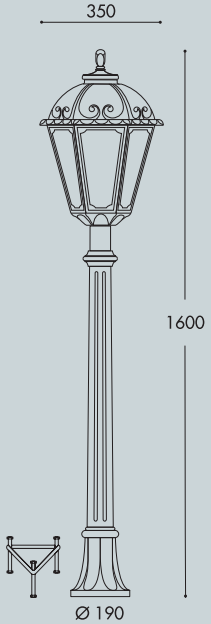

IAFET.R/SILOE
K35.162 resin

Pcs 2
Kg 13,1
mc 0,153

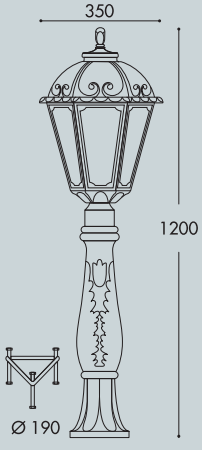

NEBO/SILOE

LARGE SIZE



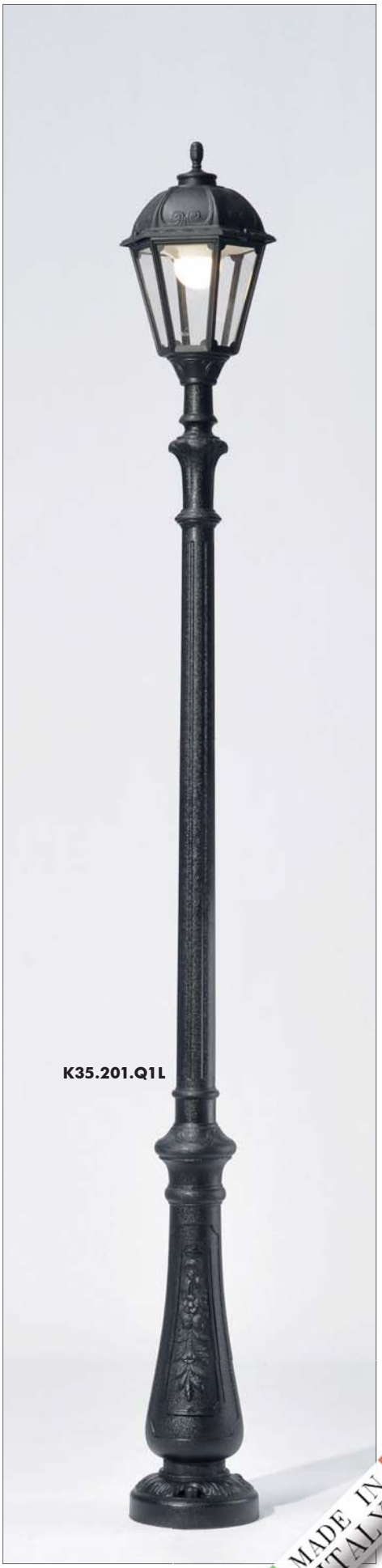

MADE IN ITALY

NEBO OFIR/SILOE 2L

K35.201.R20

Pcs 1
Kg 31,9
mc 0,268

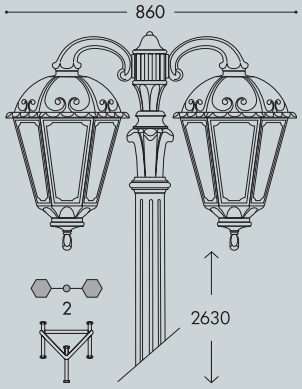

NEBO OFIR/SILOE 3L

K35.201.R30

Pcs 1
Kg 35,8
mc 0,342

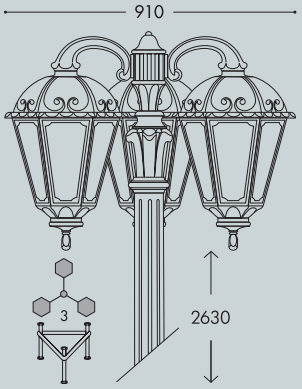

NEBO/SILOE

K35.201

Pcs 1
Kg 24,9
mc 0,196

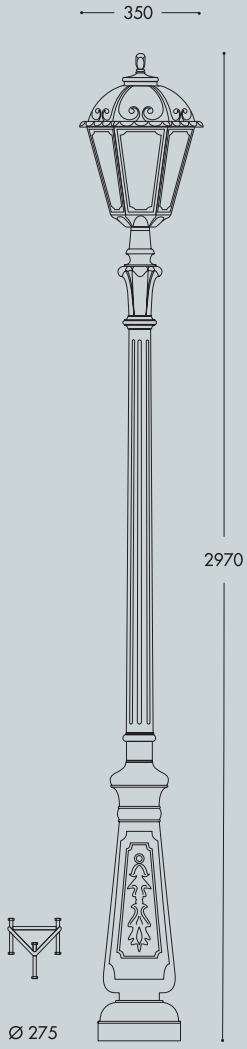

NEBO OFIR/SILOE 2L

K35.201.R20

Pcs 1
Kg 31,9
mc 0,268

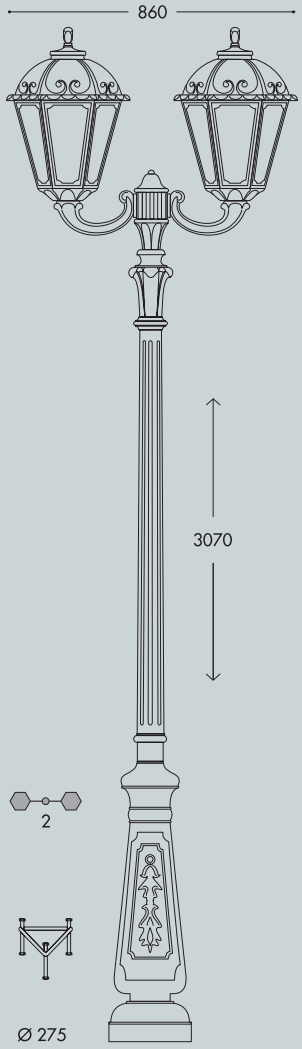

NEBO OFIR/SILOE 3L

K35.201.R30

Pcs 1
Kg 35,8
mc 0,342

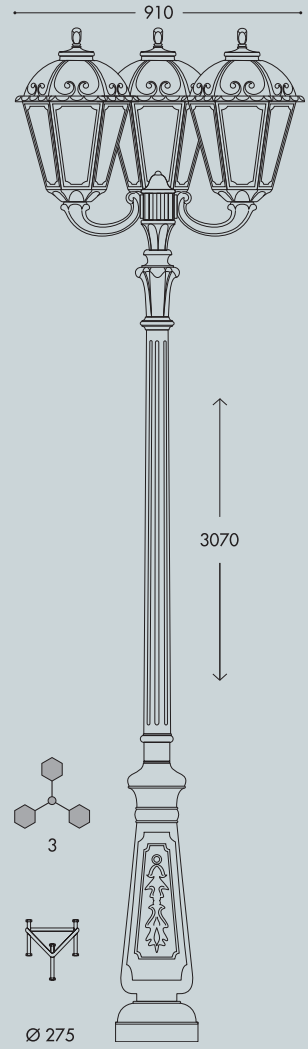

TABOR/SILOE

LARGE SIZE







MADE IN ITALY

TABOR OFIR/SILOE 2L

K35.204.R20

Pcs 1
Kg 36,4
mc 0,295

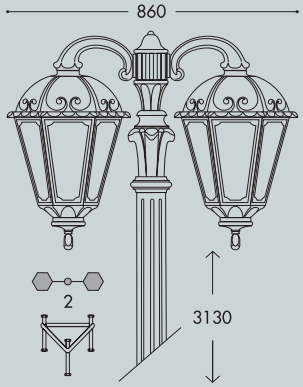

TABOR OFIR/SILOE 3L

K35.204.R30

Pcs 1
Kg 39,5
mc 0,369

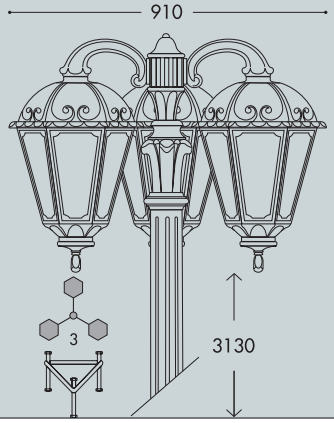

TABOR/SILOE

K35.204

Pcs 1
Kg 29,4
mc 0,223

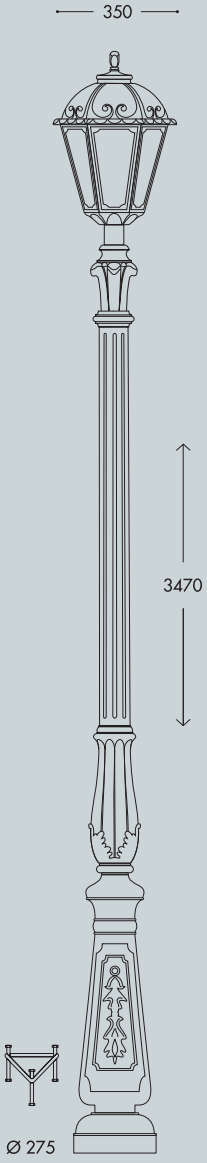

TABOR OFIR/SILOE 2L

K35.204.R20

Pcs 1
Kg 36,4
mc 0,295

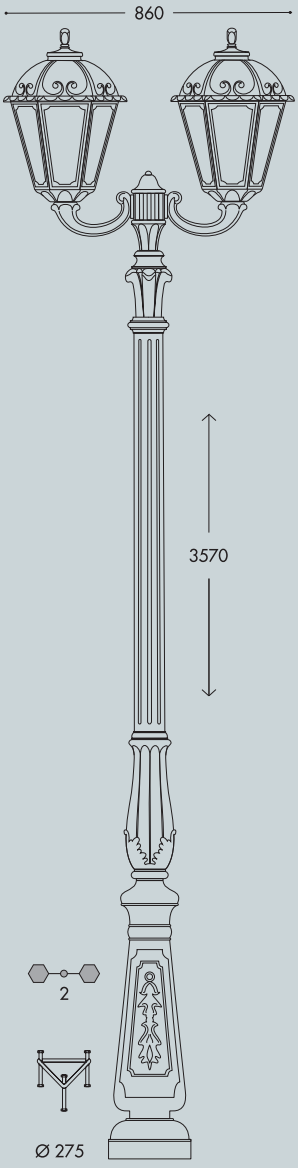

TABOR OFIR/SILOE 3L

K35.204.R30

Pcs 1
Kg 39,5
mc 0,369

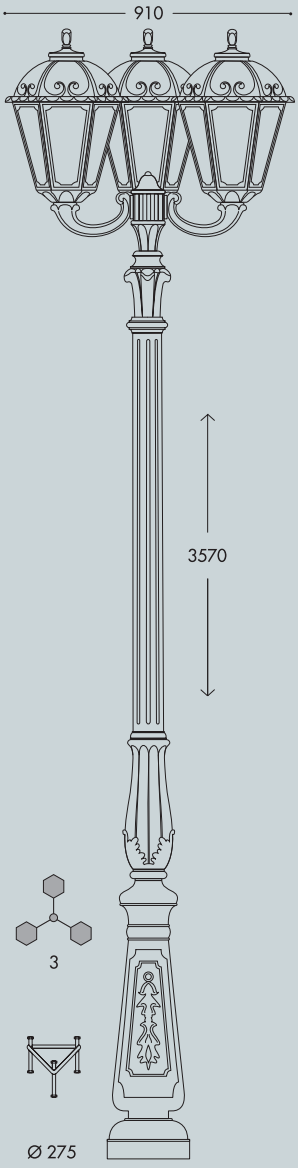

HOREB/SILOE

LARGE SIZE







MADE IN ITALY

HOREB ADAM/SILOE 1L

K35.207.M10

Pcs 1
Kg 33,8
mc 0,280

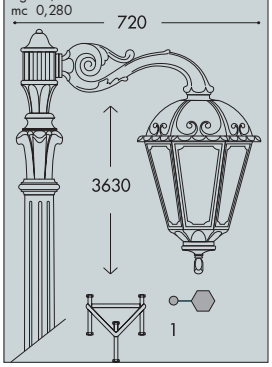

ADAM/SILOE

K35.171

Pcs 1
Kg 5,3
mc 0,083

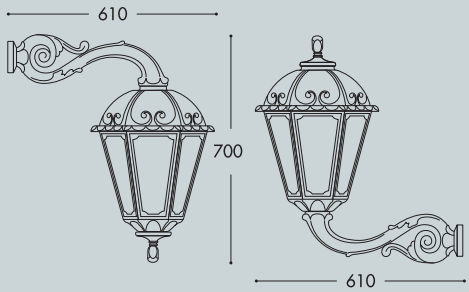

HOREB ADAM/SILOE 3+1

K35.207.M31

Pcs 1
Kg 48
mc 0,476

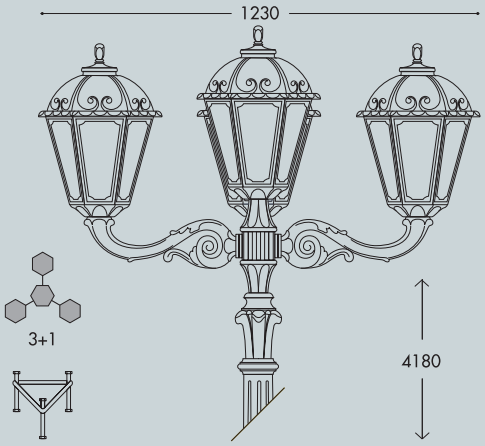

HOREB/SILOE

K35.207

Pcs 1
Kg 31,9
mc 0,249

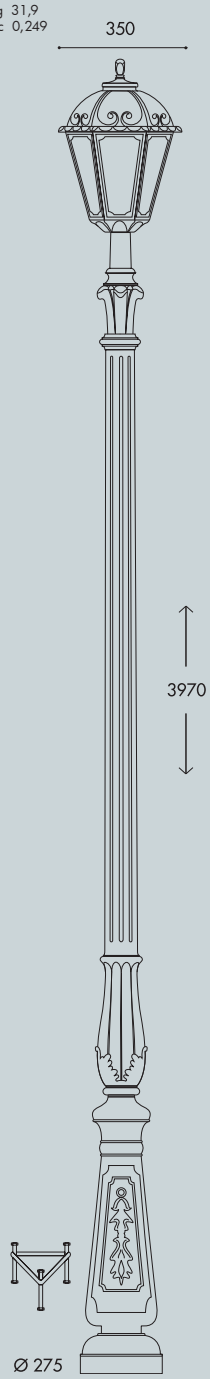

HOREB ADAM/SILOE 3L

K35.207.M30

Pcs 1
Kg 43
mc 0,414

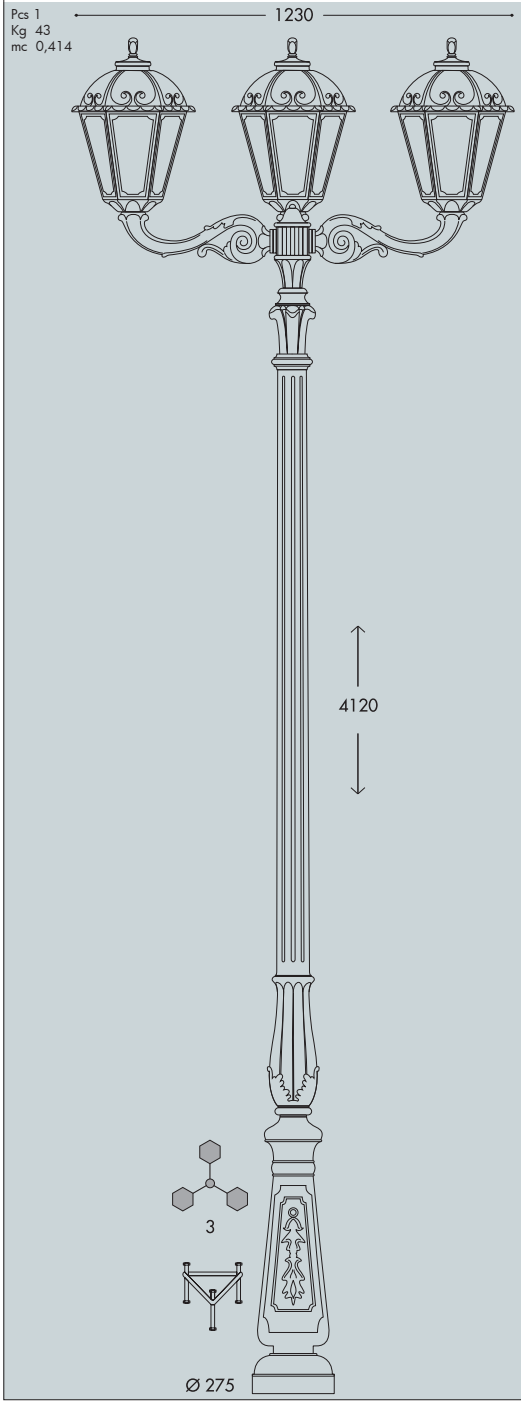

HOREB ADAM/SILOE 2+1

K35.207.M21

Pcs 1
Kg 44,1
mc 0,404

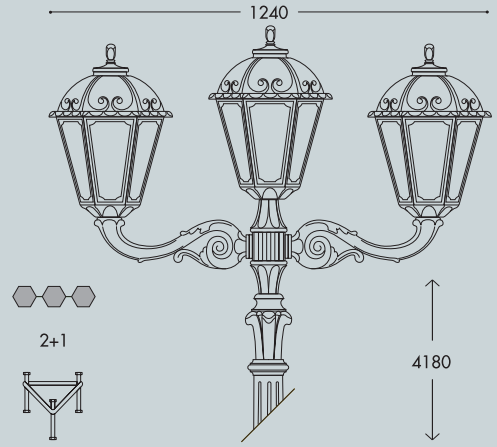

HOREB ADAM/SILOE 2L

K35.207.M20

Pcs 1
Kg 38,8
mc 0,342

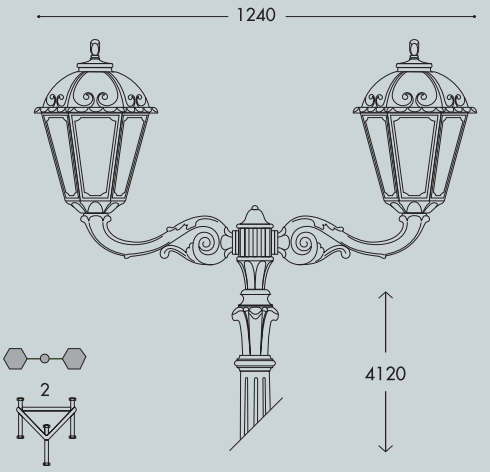

KARMEL 3000/SILOE

LARGE SIZE







MADE IN ITALY

KARMEL 3000 OFIR/SILOE 2L

K35.231.R20

Pcs 1
Kg 36,4
mc 0,295

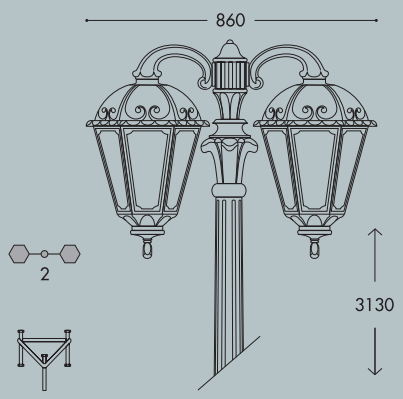

KARMEL 3000 OFIR/SILOE 3L

K35.231.R30

Pcs 1
Kg 39,5
mc 0,369

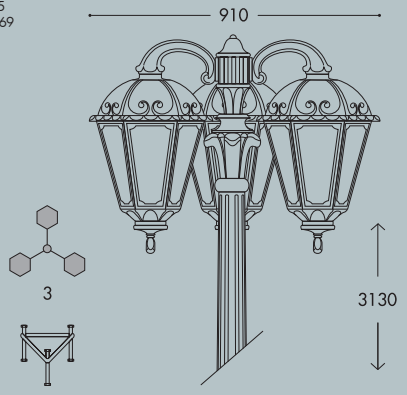

KARMEL 3000/SILOE

K35.231

Pcs 1
Kg 29,4
mc 0,223

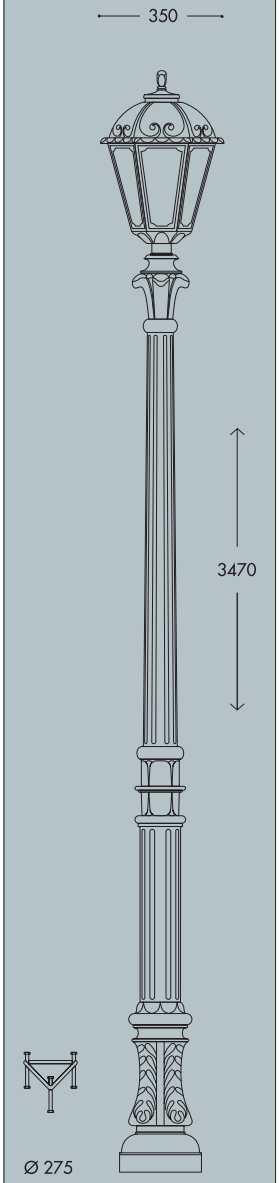

KARMEL 3000 OFIR/SILOE 2L

K35.231.R20

Pcs 1
Kg 36,4
mc 0,295

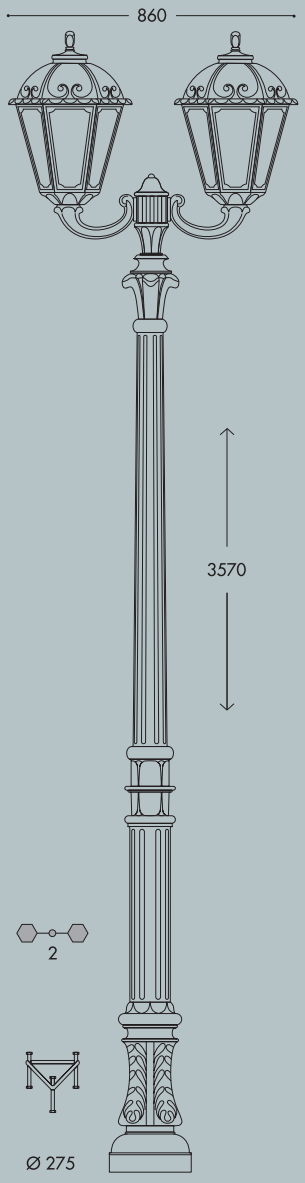

KARMEL 3000 OFIR/SILOE 3L

K35.231.R30

Pcs 1
Kg 39,5
mc 0,369

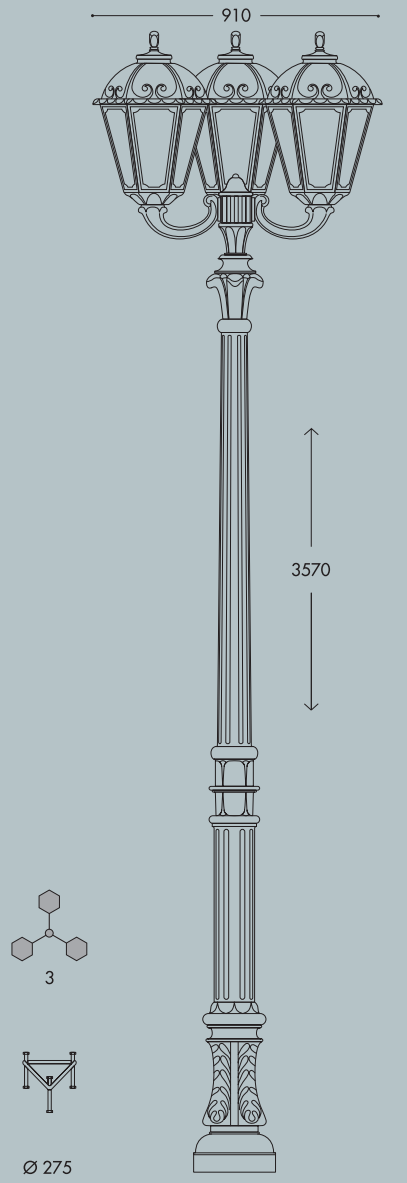

KARMEL 3500-4000/SILOE

LARGE SIZE







MADE IN ITALY

KARMEL 3500 ADAM/SILOE 1L | KARMEL 4000 ADAM/SILOE 1L

K35.234.M10 | K35.237.M10

Pcs 1 Kg 33,8 mc 0,280 | Pcs 1 Kg 36,3 mc 0,287

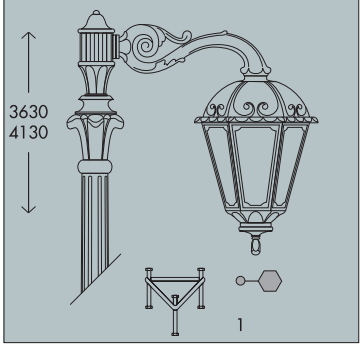

KARMEL 3500/SILOE

K35.234

Pcs 1 Kg 31,9 mc 0,249

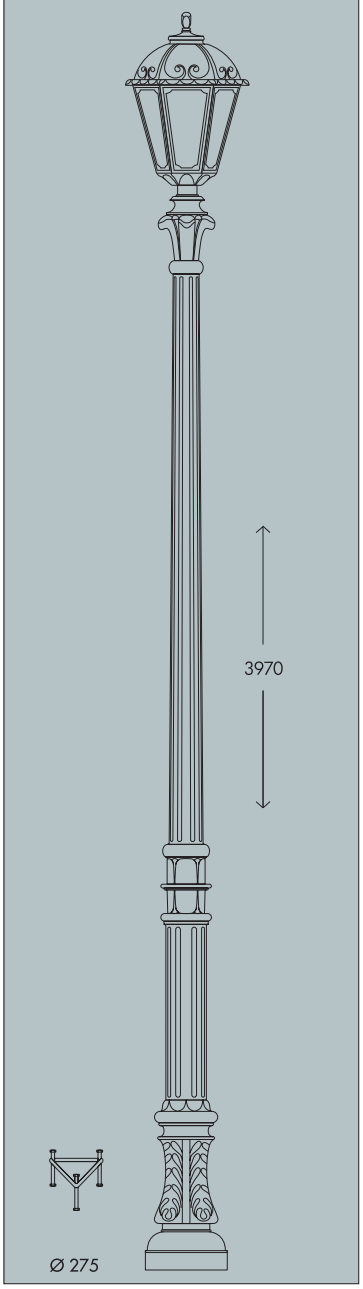

KARMEL 3500 ADAM/SILOE 2+1 | KARMEL 4000 ADAM/SILOE 2+1

K35.234.M21 | K35.237.M21

Pcs 1 Kg 43 mc 0,404 | Pcs 1 Kg 45,5 mc 0,431

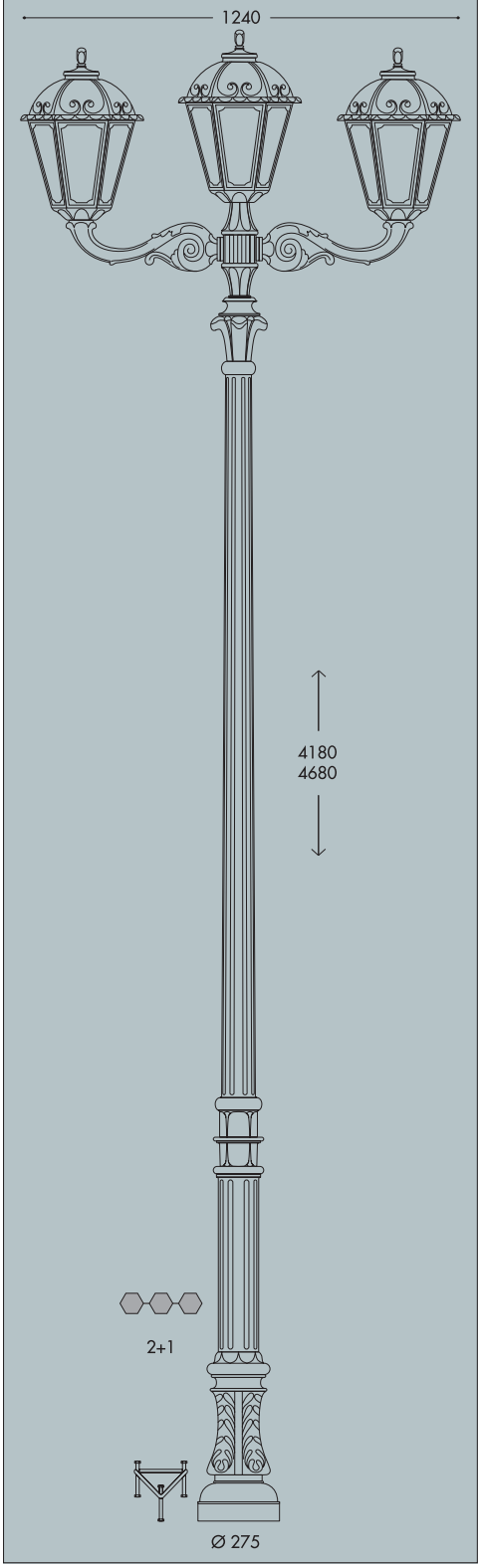

KARMEL 3500 ADAM/SILOE 3L | KARMEL 4000 ADAM/SILOE 3L

K35.234.M30 | K35.237.M30

Pcs 1 Kg 44,1 mc 0,414 | Pcs 1 Kg 46,6 mc 0,441

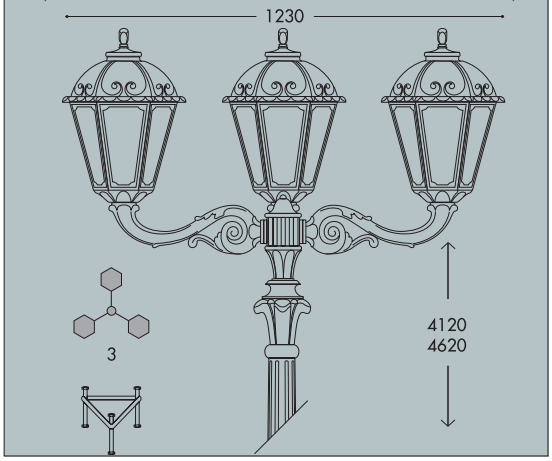

KARMEL 3500 ADAM/SILOE 3+1 | KARMEL 4000 ADAM/SILOE 3+1

K35.234.M31 | K35.237.M31

Pcs 1 Kg 48 mc 0,476 | Pcs 1 Kg 50,5 mc 0,503

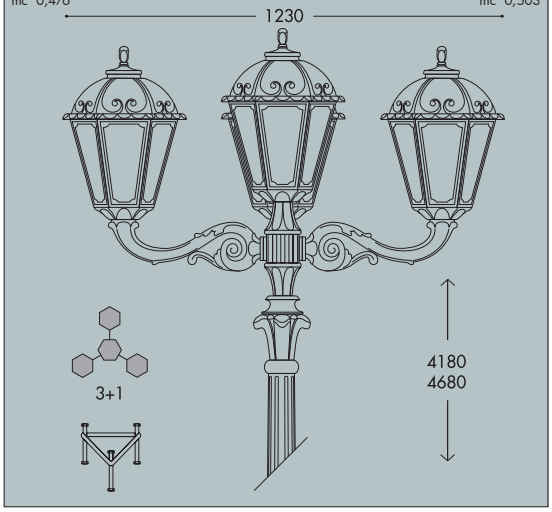

KARMEL 3500 ADAM/SILOE 2L | KARMEL 4000 ADAM/SILOE 2L

K35.234.M20 | K35.237.M20

Pcs 1 Kg 38,8 mc 0,342 | Pcs 1 Kg 41,3 mc 0,369

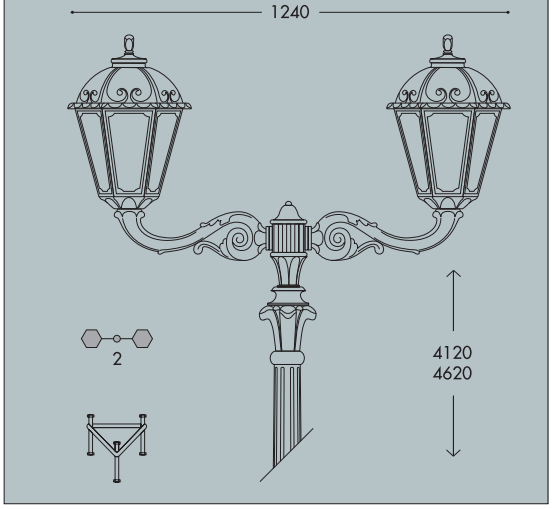

TOBIA HIGH POWER LED

LARGE SIZE

Square lantern made in shockproof resin material, UV rays stabilized, rust and corrosion-free. Modular construction suitable for post top, wall and hanging installation. Provided with reflective ceiling designed to host the lighting source and equipped with TÜV approved, long-life and efficient **E27 high power LED lamp included**. Insulation class II, Protection rating IP55.

Lanterna quadra realizzata in resina antiurto, stabilizzato ai raggi UV, inattaccabile da ruggine e corrosione. Idonea per il montaggio a palo, a sospensione o a parete. Provvista di soffitto riflettente progettato per accogliere la sorgente luminosa e fornita ***completa di lampada a LED E27 ad ALTA POTENZA****, approvata TÜV di lunga durata ed elevata efficienza. Classe di isolamento II, grado di protezione IP55.*





Q33.000.Q1L

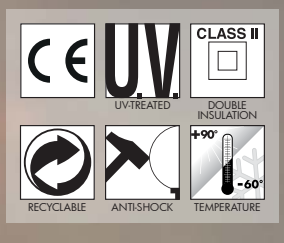

MADE IN ITALY

TOBIA HIGH POWER LED - LANTERN COMPONENTS

IP55



Decorative **PINNACLE** to be mounted on the roof top for post installation or on the lantern base for hanging installation.

PINNACOLO *decorativo applicabile alla sommità del tetto (montaggio a palo) o sulla base della gabbia (montaggio a sospensione).*

Lantern **ROOF** made of shockproof resin material. Tool-free opening for relamping and maintenance.

TETTO *realizzato in resina antiurto. Removibile senza l'ausilio di attrezzi per manutenzione e cambio lampadina.*

High temperature resistant reflective **CEILING** made of shockproof resin material. Provided with E27 lampholder and equipped with **HIGH POWER LED lamp**. Designed to host and protect the lighting source, granting its safe and quick installation.

SOFFITTO *riflettente realizzato in resina antiurto ad alta resistenza al calore. Fornito completo di portalampada E27 e provvisto di lampada a* ***LED ad ALTA POTENZA.*** *Progettato per accogliere e proteggere la sorgente luminosa garantendone una veloce e sicura installazione.*

DIFFUSER of UV-rays stabilized PMMA, with recess for a power supply cable. One piece only closed at the base to ensure high protection against external agents.

DIFFUSORE *in PMMA resistente ai raggi UV, provvisto di sede per l'alloggiamento del cavo di alimentazione. Realizzato in unico pezzo chiuso alla base per garantire un alto livello di protezione contro gli agenti esterni.*

CAGE made of shockproof resin material, UV-rays stabilized, rust and corrosion-free.

GABBIA *realizzata in resina antiurto, stabilizzata ai raggi UV, inattaccabile da ruggine e corrosione.*

TOBIA HIGH POWER LED

Q33.000 *



Dimensions and weight
Height: 520 mm
Width: 330 mm
Depth: 330 mm
Weight: 4,6 Kg
Junction to support: diameter 60 mm
Area exposed to wind pressure:
CxS = m^2 0,089

Moulded colours:
Black, White

Painted colours:
Antique green, Antique bronze

Diffuser PMMA:
Clear, Opal

HIGH POWER LED



- **COST SAVING:** long-life and efficient LED light source.
- **BUILT-IN DRIVER:** quick and easy lamp replacement
- **GREAT FLEXIBILITY:** E27 standard lamp holder.
- **FUTURE-PROOFED LUMINARIES:** performances easy to upgrade to latest technology developments.
- **SUITABLE FOR OUTDOOR USE:** built-in driver fully protected against heat and humidity by silicone paste.

Lantern equipped with TÜV approved, long-life and efficient **E27 high power LED lamp**, granting the same luminous flux of traditional SON/HQI lighting sources. The lamp can be quickly and easily replaced, making the luminaries maintenance very simple.

				*ADD. SUFFIX
E27	**30 W**	**3300 Lm**	4000 K	.Q1L
			3000 K	.Q1R
E27	**50 W**	**5000 Lm**	4000 K	.H1L
			3000 K	.H1R

LED LAMPS

More technical details about TÜV approved Fumagalli LED Lamps on page 512.

** ADD THESE SUFFIXES TO THE REFERENCES MENTIONED IN THE CATALOGUE*

PHOTOMETRIC DATA SAMPLE

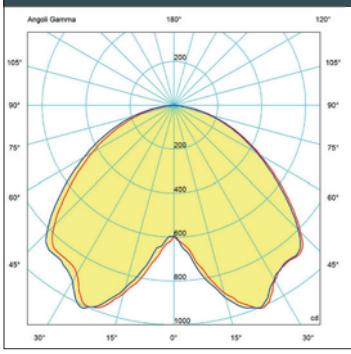

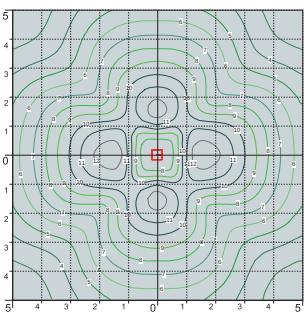

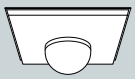

HIGH POWER LED **30W** (power consumption)

Area: 10x10mt
Height: 3.5mt
15 lux

SAVE **-65%**

=

TOBIA E27



SON 70W **84W** (power consumption)

Area: 10x10mt
Height: 3.5mt
11 lux

TOBIA E27

LARGE SIZE

E27 square lantern in classic style, made of shockproof resin material, UV-rays stabilized, rust and corrosion-free. Modular construction suitable for post top, hanging and wall installation. Provided with high temperature resistant ceiling suitable for ballast fixation. Insulation class II, protection rating IP 55.

Lanterna quadra E27 in stile classico, realizzata in resina antiurto, stabilizzata ai raggi UV, inattaccabile da ruggine e corrosione. Idonea per il montaggio a palo, a sospensione o a parete. Fornita con soffitto ad alta resistenza al calore idoneo per il fissaggio dei reattori. Classe di isolamento II, grado di protezione IP55.



Q33.000.N2R

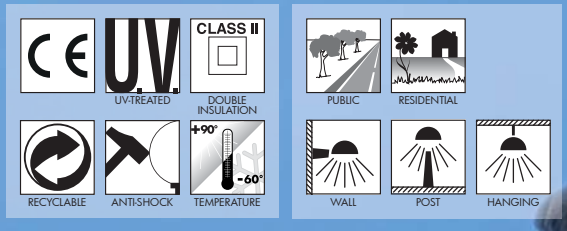

MADE IN ITALY

TOBIA E27 - LANTERN COMPONENTS

IP55



Decorative **PINNACLE** to be mounted on the roof top for post installation or on the lantern base for hanging installation.

PINNACOLO *decorativo applicabile alla sommità del tetto (montaggio a palo) o sulla base della gabbia (montaggio a sospensione).*

Lantern **ROOF** made of shockproof resin material. Tool-free opening for relamping and maintenance.

TETTO *realizzato in resina antiurto. Removibile senza l'ausilio di attrezzi per manutenzione e cambio lampadina.*

High temperature resistant reflective **CEILING** made of shockproof resin material. Provided with E27 lampholder and suitable for ballast fixation.

SOFFITTO *riflettente realizzato in resina antiurto ad alta resistenza al calore. Fornito completo di portalampada E27 e idoneo per il fissaggio dei reattori.*

DIFFUSER of UV-rays stabilized PMMA, with recess for a power supply cable. One piece only closed at the base to ensure high protection against external agents.

DIFFUSORE *in PMMA resistente ai raggi UV, provvisto di sede per l'alloggiamento del cavo di alimentazione. Realizzato in unico pezzo chiuso alla base per garantire un alto livello di protezione contro gli agenti esterni.*

CAGE made of shockproof resin material, UV-rays stabilized, rust and corrosion-free.

GABBIA *realizzata in resina antiurto, stabilizzata ai raggi UV, inattaccabile da ruggine e corrosione.*

TOBIA E27

Q33.000 *



Dimensions and weight
Height: 520 mm
Width: 330 mm
Depth: 330 mm
Weight: 3,8 Kg
Junction to support: diameter 60 mm
Area exposed to wind pressure:
CxS = m² 0,089

Moulded colours:
Black *White*

Painted colours:
Antique green *Antique bronze*

Diffuser PMMA:
Clear *Opal*

E27



E27 lantern supplied as an option with TÜV approved, long-life and efficient **LED filament lamps suitable for outdoor use.**
Metal plate for ballast fixation available as an option (H.BAL.PLT)

Suitable lamps: CFL-LED-SON-HQI MAX 70W		E27 lampholder only		*ADD. SUFFIX .E27
FILAMENT LED E27	8W	1000 Lm	4000 K	.M1L
			2700 K	.M1R
FILAMENT LED E27	12W	1500 Lm	4000 K	.N1L
			2700 K	.N1R

2x E27



2x E27 lantern provided as an option with TÜV approved, long-life and efficient **LED filament lamps suitable for outdoor use**. Version with daylight and motion sensor available.

Suitable lamps: CFL-LED max 160 mm		2x E27 lampholder only		*ADD. SUFFIX .E28
		2x E27 + SENSOR		.ES8
2 FILAMENT LED LAMPS	2x 8 W 16W	2000 Lm	4000 K	.M2L
			2700 K	.M2R
	2x 12 W 24W	3000 Lm	4000 K	.N2L
			2700 K	.N2R

LED LAMPS

More technical details about TÜV approved Fumagalli LED Lamps on page 512.

** ADD THESE SUFFIXES TO THE REFERENCES MENTIONED IN THE CATALOGUE*

PHOTOMETRIC DATA SAMPLE

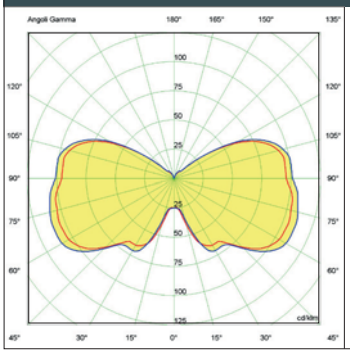

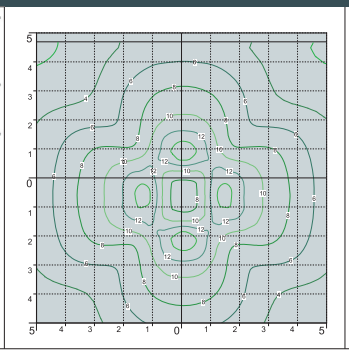

TOBIA *lantern clear SON 70W.*

POST height 3.5mt
10 x 10mt area: average 11 lux

The photometric data for all the versions are available upon request or on our website.

TOBIA GX53 LED - FLAT DIFFUSER

LARGE SIZE

Square lantern in classic style, made of shockproof resin material, UV-rays stabilized, rust and corrosion- free. Modular construction suitable for post top, hanging and wall installation. Supplied as standard with **FLAT diffuser** and equipped with long-life, powerful and efficient TÜV approved **GX53 LED modular system** in different wattages. Designed according to the international regulations against light pollution (standard UNI 10819). Insulation class II, Protection rating IP 65.

*Lanterna quadra in stile classico, realizzata in resina antiurto, stabilizzata ai raggi UV, inattaccabile da ruggine e corrosione. Idonea per il montaggio a palo, a sospensione o a parete. Fornita con **diffusore piatto** ed equipaggiata con **sistema modulare a LED GX53** approvato TÜV di lunga durata ed alta efficienza disponibile in diverse potenze. Progettato in ottemperanza alle norme internazionali contro l'inquinamento luminoso (standard UNI 10819). Classe di isolamento II, grado di protezione IP65.*

Q35.000.D4L

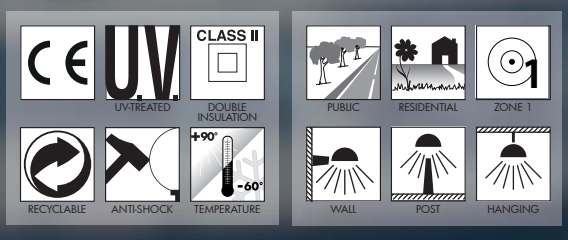

MADE IN ITALY

TOBIA GX53 LED - LANTERN COMPONENTS

IP65



Decorative **PINNACLE** to be mounted on the roof top for post installation or on the lantern base for hanging installation.

PINNACOLO *decorativo applicabile alla sommità del tetto (montaggio a palo) o sulla base della gabbia (montaggio a sospensione).*

LANTERN ROOF made of shockproof resin material, UV-rays stabilized. Tool-free opening for relamping and maintenance.

TETTO *realizzato in resina antiurto, stabilizzata ai raggi UV. Removibile senza l'ausilio di attrezzi per manutenzione e cambio lampadina.*

DIFFUSER with flat shape made of UV-rays stabilized polymethylmethacrylate (PMMA), provided with silicone rubber gasket to ensure an increased protection against external agent.

DIFFUSORE *in polimetilmetacrilato (PMMA) con configurazione piatta, provvisto di guarnizione in gomma siliconica per garantire una migliore protezione contro gli agenti esterni.*

CAGE made of shockproof resin material, UV-rays stabilized, rust and corrosion-free.

GABBIA *realizzata in resina antiurto, stabilizzata ai raggi UV, inattaccabile da ruggine e corrosione.*

TOBIA GX53 LED

Q35.000 *



Dimensions and weight
Height: 520 mm
Width: 330 mm
Depth: 330 mm
Weight: 4,6 Kg
Junction to support: diameter 60 mm
Area exposed to wind pressure:
CxS = m^2 0,089

Moulded colours:
Black *White*

Painted colours:
Antique green *Antique bronze*

Diffuser PMMA:
Clear *Opal*

GX53 LED



- **COST SAVING:** long-life and efficient LED light sources.
- **BUILT-IN DRIVER:** quick and easy lamp replacement
- **GREAT FLEXIBILITY:** GX53 standard lamp holder.
- **FUTURE-PROOFED LUMINARIES:** performances easy to upgrade to latest technology developments.
- **SUITABLE FOR OUTDOOR USE:** built-in driver fully protected against heat and humidity by silicone paste.

Lantern supplied with white resin CEILING provided with TÜV approved, long-life and efficient **4x GX53 LED lamps included**. Each lamp can be quickly and easily replaced individually, making the luminaries maintenance very simple.



			*ADD. SUFFIX
4x 7 W **28 W**	**3200 Lm**	4000 K	.C4L
		3000 K	.C4R
4x 10 W **40 W**	**4800 Lm**	4000 K	.D4L
		3000 K	.D4R

LED LAMPS

More technical details about TÜV approved Fumagalli LED Lamps on page 512.

** ADD THESE SUFFIXES TO THE REFERENCES MENTIONED IN THE CATALOGUE*

PHOTOMETRIC DATA SAMPLE

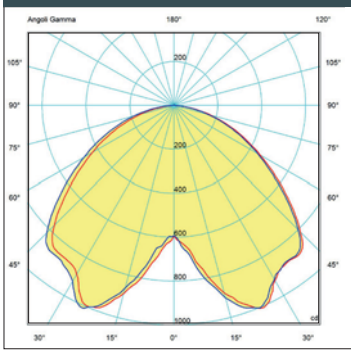

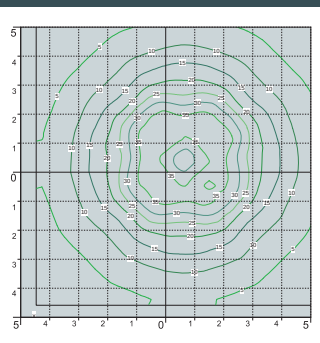

4x10W GX53 LED **40W** (power consumption)

Area: 10x10mt
Height: 4mt
22 lux

SAVE -65%

=

SON 100W **112W** (power consumption)

Area: 10x10mt
Height: 4mt
16 lux

TOBIA

LARGE SIZE













MADE IN ITALY

OFIR/TOBIA

Q33.132

GX53 Q35.132

Pcs 1
Kg 5,6
mc 0,061

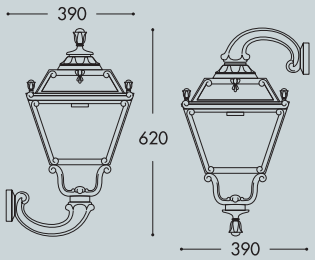

EVA/TOBIA

Q33.181

GX53 Q35.181

Pcs 1
Kg 12,3
mc 0,168

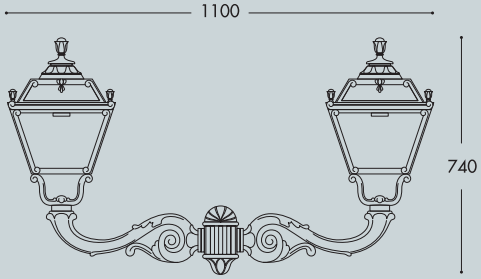

TOBIA

Q33.000

GX53 Q35.000

Pcs 1
Kg 4,6
mc 0,043

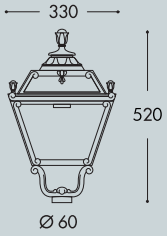

LOT/TOBIA

Q33.113

GX53 Q35.113

Pcs 1
Kg 5,8
mc 0,061

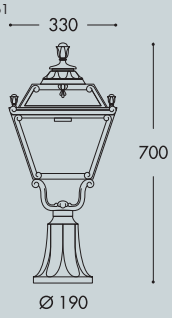

MIRRA/TOBIA

Q33.142

GX53 Q35.142

Pcs 1
Kg 10,9
mc 0,083

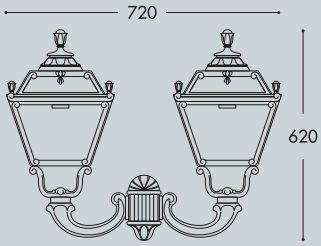

SICHEM/TOBIA

Q33.121

GX53 Q35.121

Pcs 1
Kg 5,4
mc 0,061

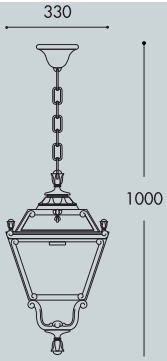

RICU/TOBIA

Q33.157

GX53 Q35.157

Pcs 2
Kg 29,2
mc 0,334

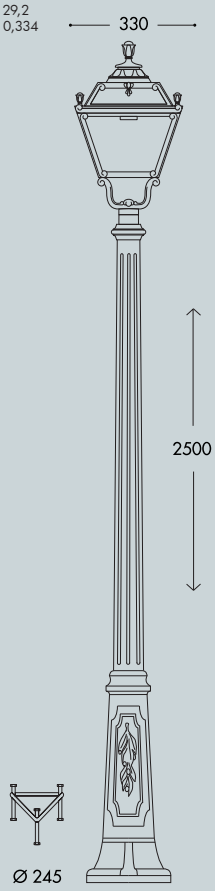

GIGI/TOBIA

Q33.156

GX53 Q35.156

Pcs 2
Kg 27,7
mc 0,304

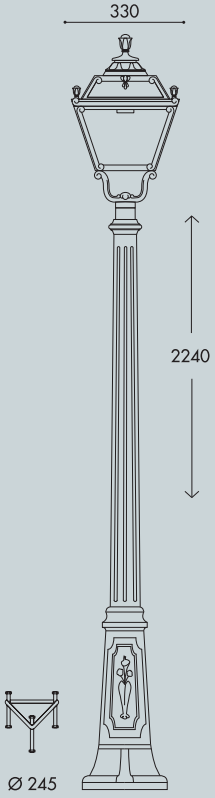

ARTU'/TOBIA

Q33.158

GX53 Q35.158

Pcs 2
Kg 24,7
mc 0,273

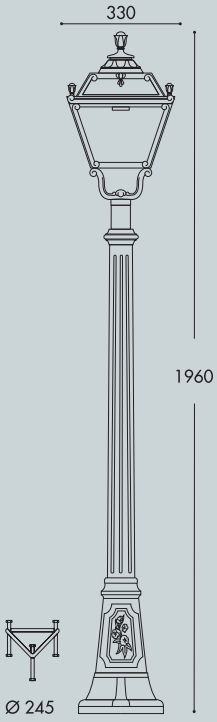

ALOE'/TOBIA

Q33.163 resin

GX53 Q35.163 resin

Pcs 2
Kg 15,2
mc 0,208

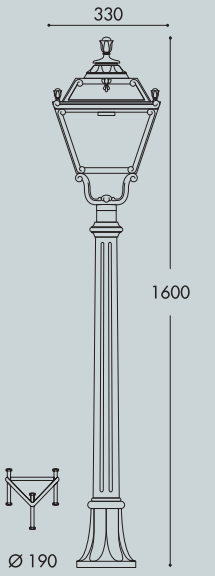

IAFET.R/TOBIA

Q33.162 resin

GX53 Q35.162 resin

Pcs 2
Kg 14,5
mc 0,179

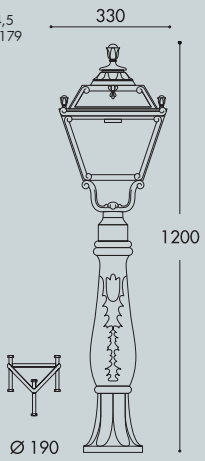

NEBO/TOBIA

LARGE SIZE









MADE IN ITALY

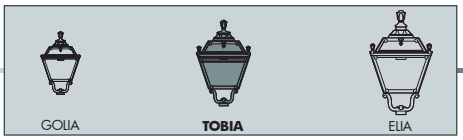

NEBO/TOBIA

LARGE SIZE

NEBO OFIR/TOBIA 2L

Q33.201.R20

GX53 Q35.201.R20

Pcs 1
Kg 31,8
mc 0,268

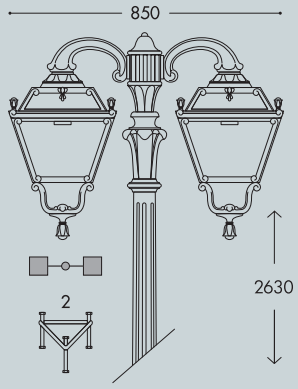

NEBO OFIR/TOBIA 3L

Q33.201.R30

GX53 Q35.201.R30

Pcs 1
Kg 36,5
mc 0,342

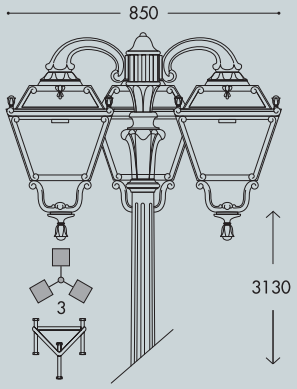

NEBO/TOBIA

Q33.201

GX53 Q35.201

Pcs 1
Kg 25,6
mc 0,196

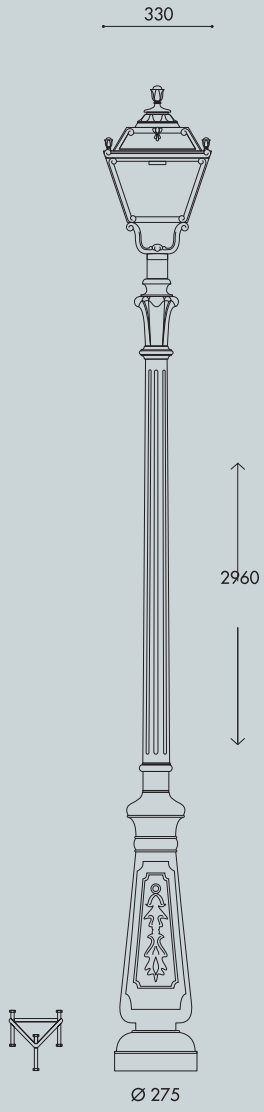

NEBO OFIR/TOBIA 2L

Q33.201.R20

GX53 Q35.201.R20

Pcs 1
Kg 31,9
mc 0,268

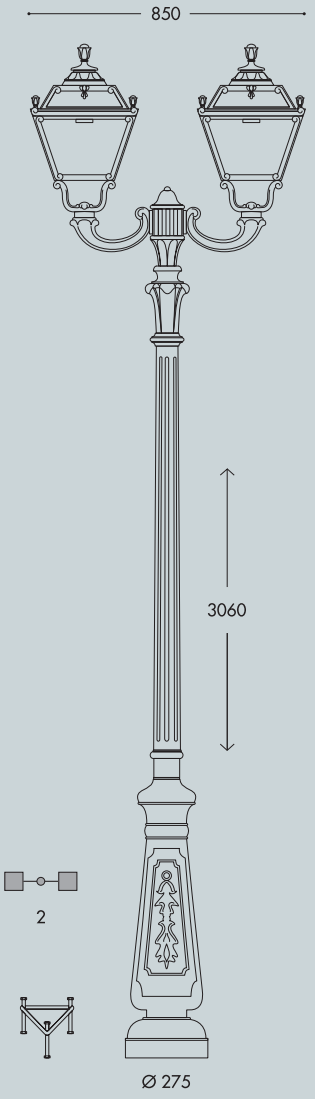

NEBO OFIR/TOBIA 3L

Q33.201.R30

GX53 Q35.201.R30

Pcs 1
Kg 36,5
mc 0,342

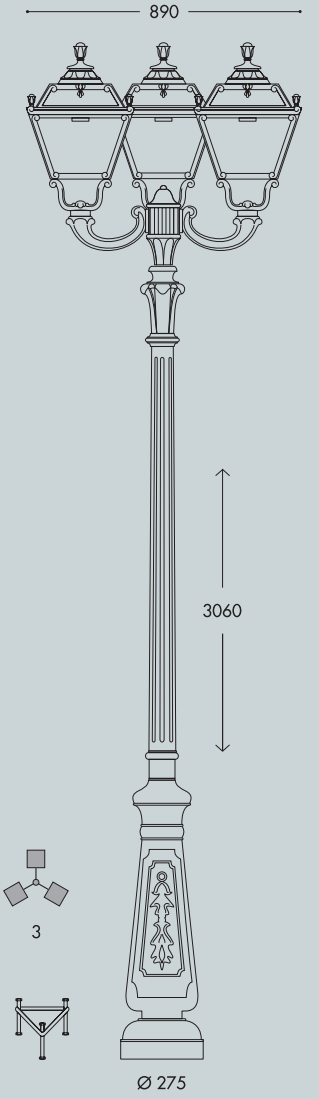

TABOR/TOBIA

LARGE SIZE







MADE IN ITALY

TABOR OFIR/TOBIA 2L

	Q33.204.R20
GX53	Q35.204.R20

Pcs 1
Kg 36,5
mc 0,295

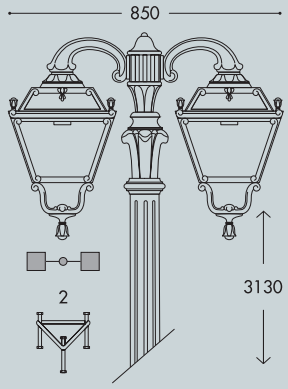

TABOR OFIR/TOBIA 3L

	Q33.204.R30
GX53	Q35.204.R30

Pcs 1
Kg 41,1
mc 0,369

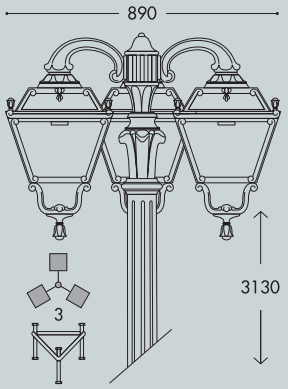

TABOR/TOBIA

	Q33.204
GX53	Q35.204

Pcs 1
Kg 30,1
mc 0,223



TABOR OFIR/TOBIA 2L

	Q33.204.R20
GX53	Q35.204.R20

Pcs 1
Kg 36,5
mc 0,295

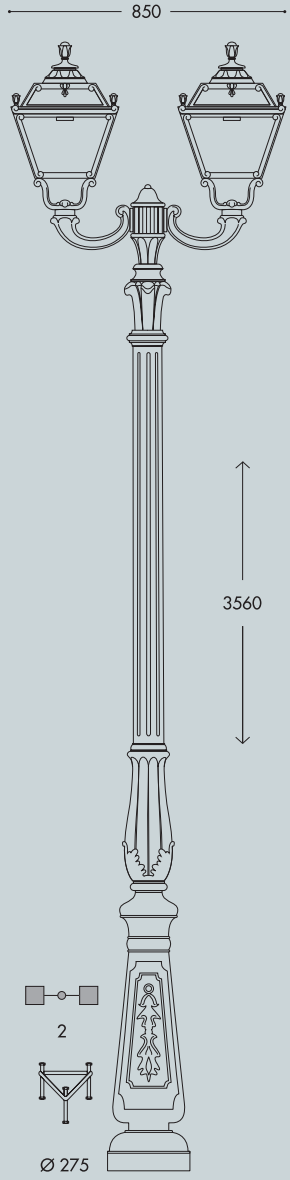

TABOR OFIR/TOBIA 3L

	Q33.204.R30
GX53	Q35.204.R30

Pcs 1
Kg 41,1
mc 0,369

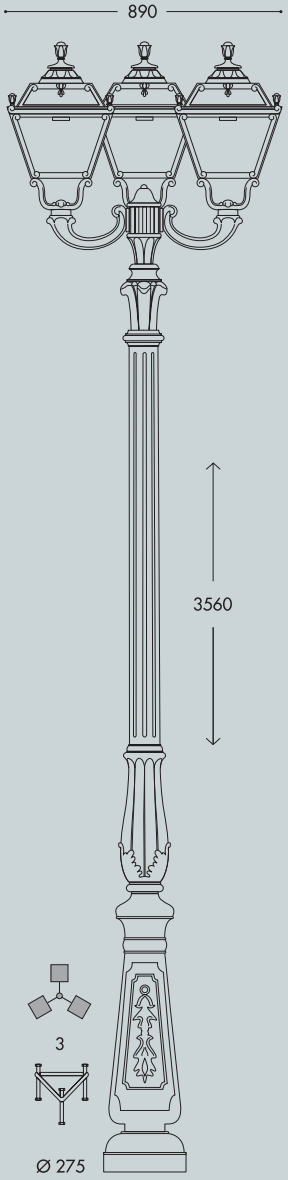

HOREB/TOBIA

LARGE SIZE







MADE IN ITALY

HOREB ADAM/TOBIA 1L

Q33.207.M10

GX53 Q35.207.M10

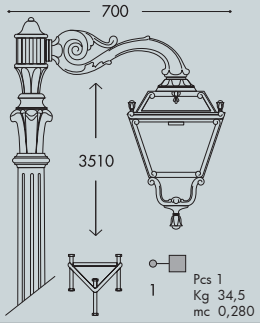

ADAM/TOBIA

Q33.171

GX53 Q35.171

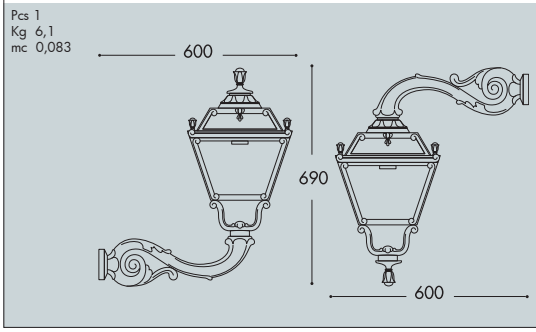

HOREB ADAM/TOBIA 2+1

Q33.207.M21

GX53 Q35.207.M21

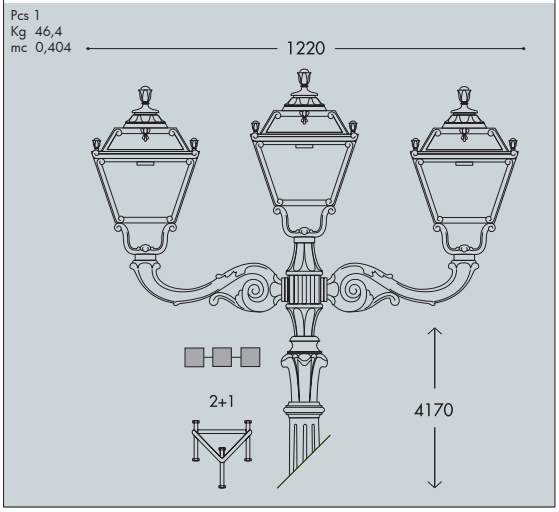

HOREB/TOBIA

Q33.207

GX53 Q35.207

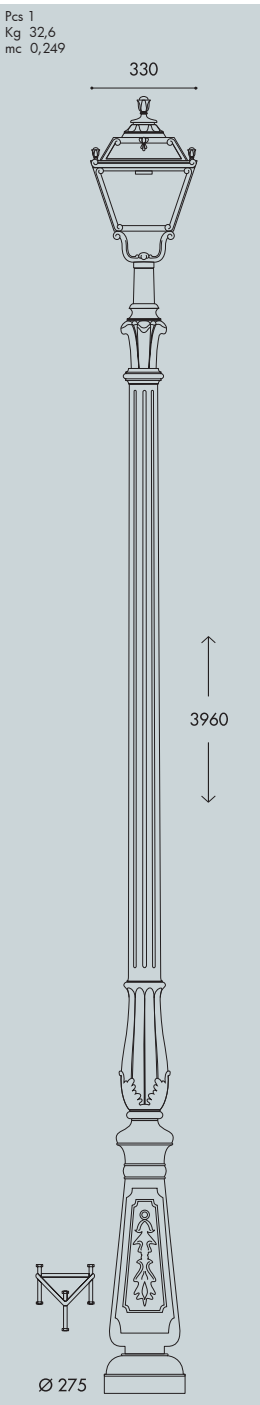

HOREB ADAM/TOBIA 3+1

Q33.207.M31

GX53 Q35.207.M31

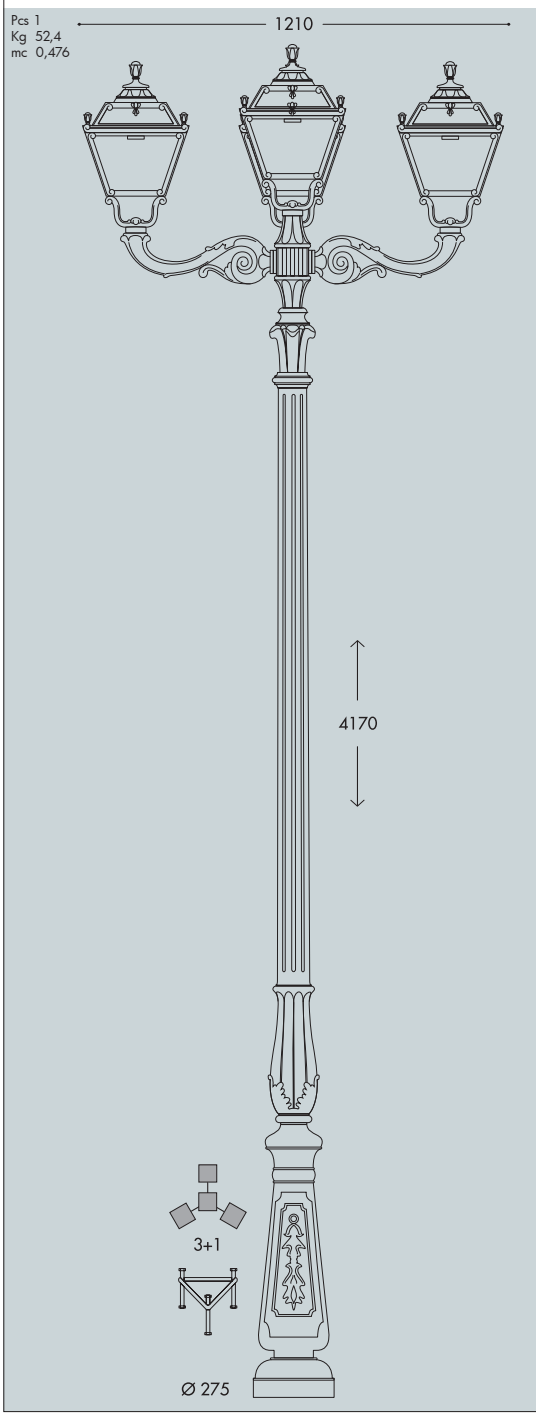

HOREB ADAM/TOBIA 3L

Q33.207.M30

GX53 Q35.207.M30

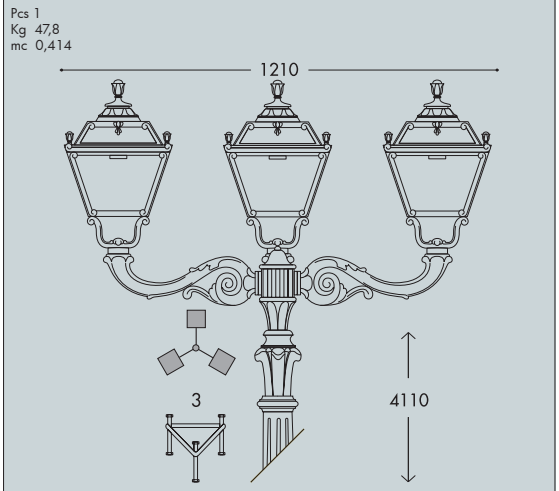

HOREB ADAM/TOBIA 2L

Q33.207.M20

GX53 Q35.207.M20

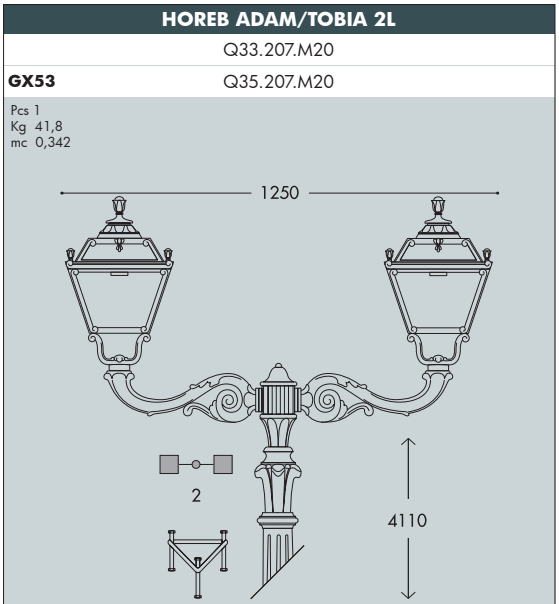

KARMEL 3000/TOBIA

LARGE SIZE







MADE IN ITALY

KARMEL 3000 OFIR/TOBIA 2L

Q33.231.R20

GX53 Q35.231.R20

Pcs 1
Kg 36,5
mc 0,295

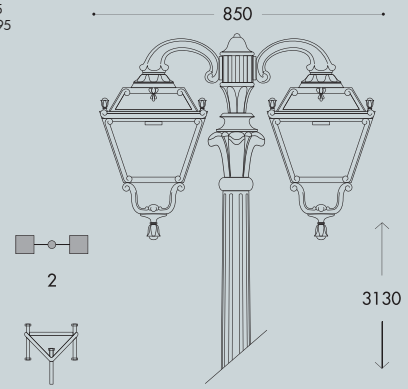

KARMEL 3000 OFIR/TOBIA 3L

Q33.231.R30

GX53 Q35.231.R30

Pcs 1
Kg 41,1
mc 0,369

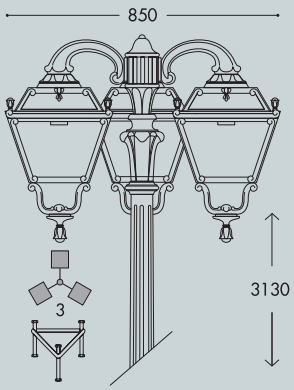

KARMEL 3000/TOBIA

Q33.231

GX53 Q35.231

Pcs 1
Kg 30,1
mc 0,223

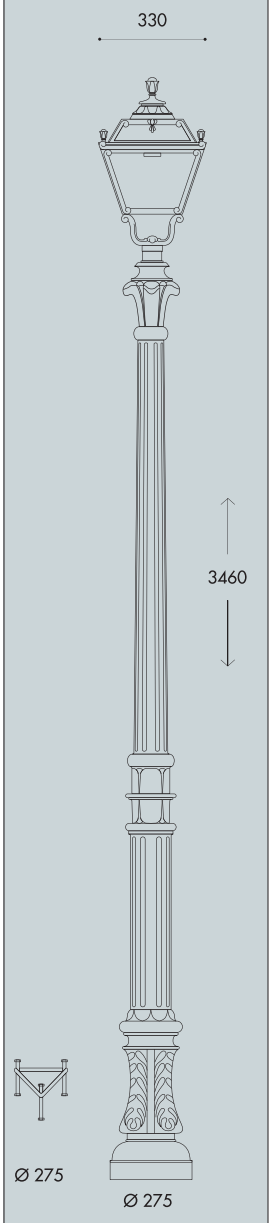

KARMEL 3000 OFIR/TOBIA 2L

Q33.231.R20

GX53 Q35.231.R20

Pcs 1
Kg 36,5
mc 0,295

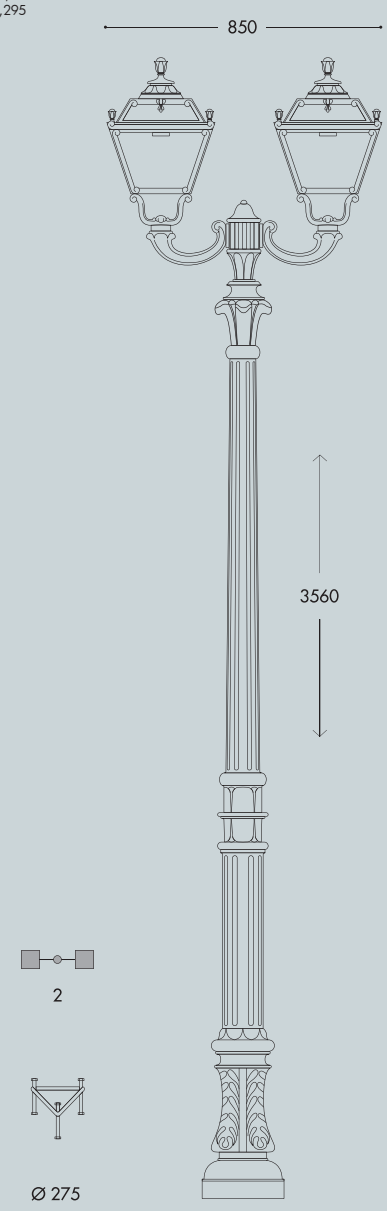

KARMEL 3000 OFIR/TOBIA 3L

Q33.231.R30

GX53 Q35.231.R30

Pcs 1
Kg 41,1
mc 0,369

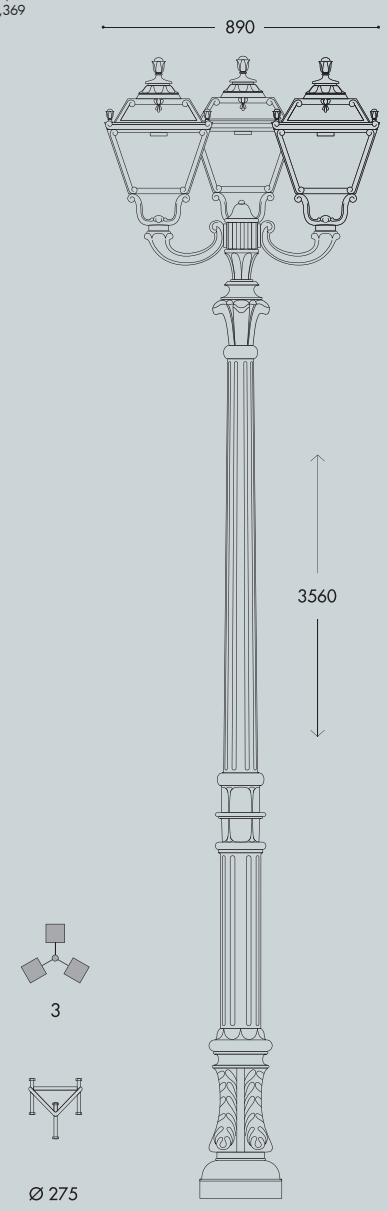

KARMEL 3500-4000/TOBIA

LARGE SIZE







MADE IN ITALY

KARMEL 3500 ADAM/TOBIA 1L	KARMEL 4000 ADAM/TOBIA 1L
Q33.234.M10	Q33.237.M10
GX53 Q35.234.M10	Q35.237.M10

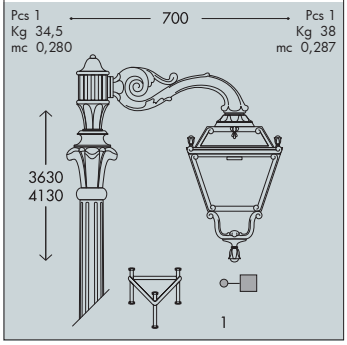

KARMEL 3500/TOBIA
Q33.234
GX53 Q35.234

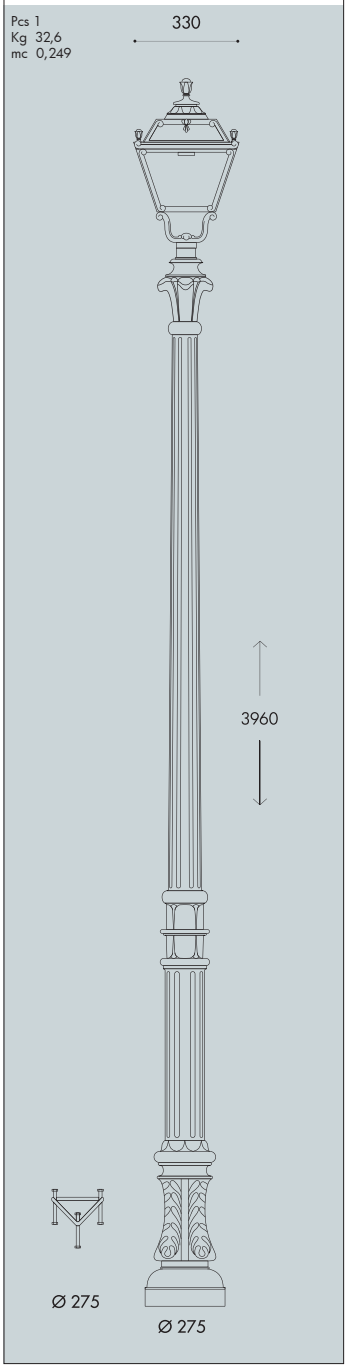

KARMEL 3500 ADAM/TOBIA 2+1	KARMEL 4000 ADAM/TOBIA 2+1
Q33.234.M21	Q33.237.M21
GX53 Q35.234.M21	Q35.237.M21

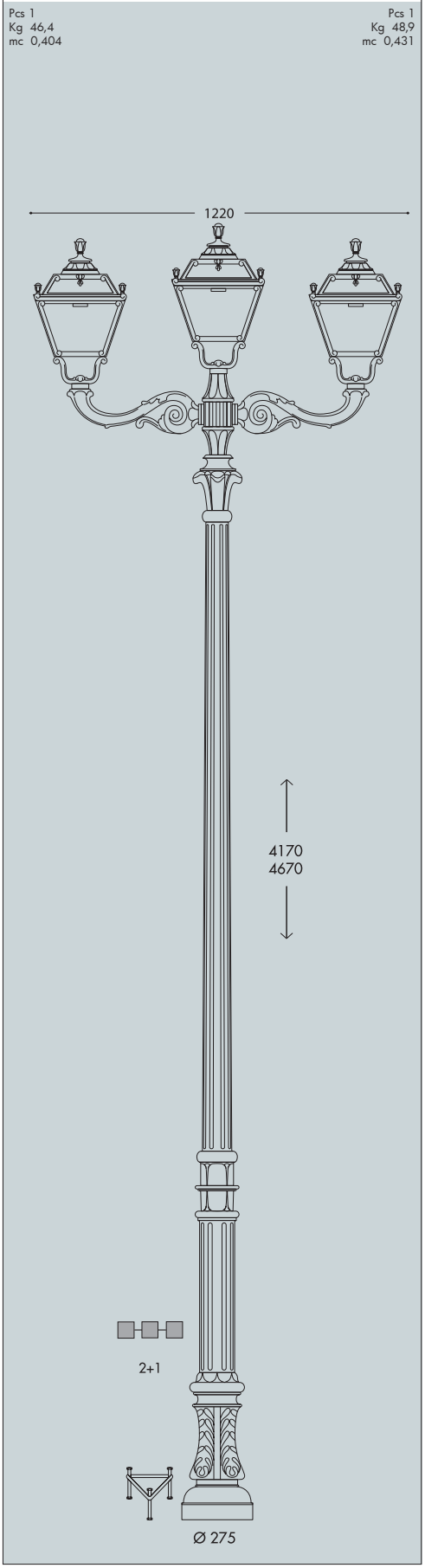

KARMEL 3500 ADAM/TOBIA 3L	KARMEL 4000 ADAM/TOBIA 3L
Q33.234.M30	Q33.237.M30
GX53 Q35.234.M30	Q35.237.M30

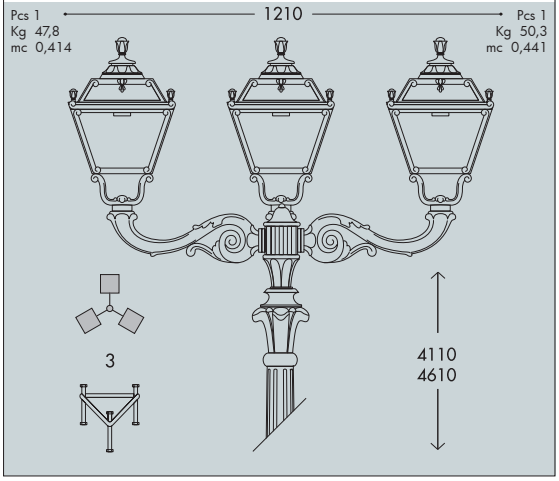

KARMEL 3500 ADAM/TOBIA 3+1	KARMEL 4000 ADAM/TOBIA 3+1
Q33.234.M31	Q33.237.M31
GX53 Q35.234.M31	Q35.237.M31

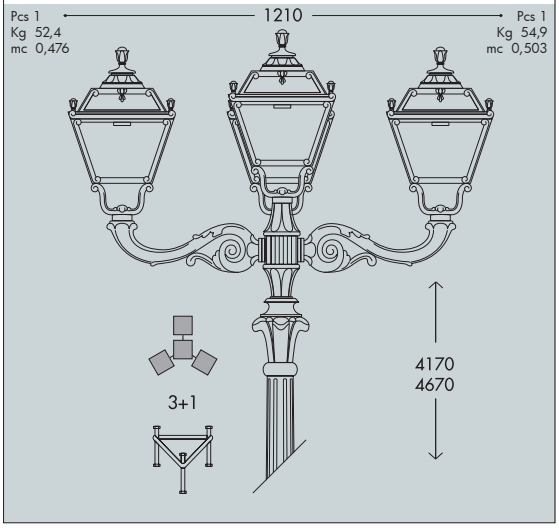

KARMEL 3500 ADAM/TOBIA 2L	KARMEL 4000 ADAM/TOBIA 2L
Q33.234.M20	Q33.237.M20
GX53 Q35.234.M20	Q35.237.M20

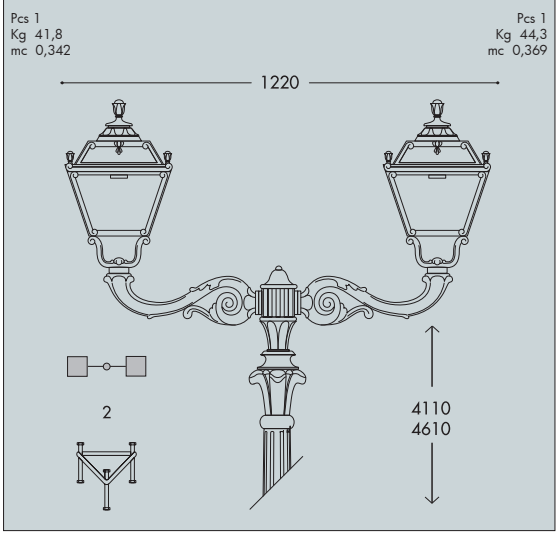

SIMON HIGH POWER LED

LARGE SIZE

Square lantern made in shockproof resin material, UV rays stabilized, rust and corrosion-free. Modular construction suitable for post top, wall and hanging installation. Provided with reflective ceiling designed to host the lighting source and equipped with TÜV approved, long-life and efficient **E27 high power LED lamp included.** Insulation class II, Protection rating IP55.

Lanterna quadra realizzata in resina antiurto, stabilizzato ai raggi UV, inattaccabile da ruggine e corrosione. Idonea per il montaggio a palo, a sospensione o a parete. Provvista di soffitto riflettente progettato per accogliere la sorgente luminosa e fornita ***completa di lampada a LED E27 ad ALTA POTENZA****, approvata TÜV di lunga durata ed elevata efficienza. Classe di isolamento II, grado di protezione IP55.*



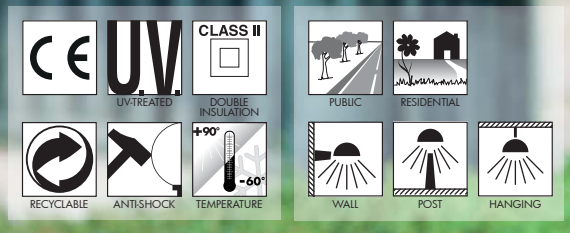

U33.132.Q1L

MADE IN ITALY

SIMON HIGH POWER LED - LANTERN COMPONENTS

IP55



Decorative **PINNACLE** to be mounted on the roof top for post installation or on the lantern base for hanging installation.

***PINNACOLO** decorativo applicabile alla sommità del tetto (montaggio a palo) o sulla base della gabbia (montaggio a sospensione).*

Lantern **ROOF** made of shockproof resin material. Tool-free opening for relamping and maintenance.

***TETTO** realizzato in resina antiurto. Removibile senza l'ausilio di attrezzi per manutenzione e cambio lampadina.*

High temperature resistant reflective **CEILING** made of shockproof resin material. Provided with E27 lampholder and equipped with **HIGH POWER LED lamp**. Designed to host and protect the lighting source, granting its safe and quick installation.

***SOFFITTO** riflettente realizzato in resina antiurto ad alta resistenza al calore. Fornito completo di portalampada E27 e provvisto di lampada a **LED ad ALTA POTENZA.** Progettato per accogliere e proteggere la sorgente luminosa garantendone una veloce e sicura installazione.*

DIFFUSER of UV-rays stabilized PMMA, with recess for a power supply cable. One piece only closed at the base to ensure high protection against external agents.

***DIFFUSORE** in PMMA resistente ai raggi UV, provvisto di sede per l'alloggiamento del cavo di alimentazione. Realizzato in unico pezzo chiuso alla base per garantire un alto livello di protezione contro gli agenti esterni.*

CAGE made of shockproof resin material, UV-rays stabilized, rust and corrosion-free.

***GABBIA** realizzata in resina antiurto, stabilizzata ai raggi UV, inattaccabile da ruggine e corrosione.*

SIMON HIGH POWER LED

U33.000 *



Dimensions and weight
Height: 560 mm
Width: 330 mm
Depth: 330 mm
Weight: 4,6 Kg
Junction to support: diameter 60 mm
Area exposed to wind pressure:
CxS = m^2 0,102

Moulded colours:
Black *White*

Painted colours:
Antique green *Antique bronze*

Diffuser PMMA:
Clear *Opal*

HIGH POWER LED



- **COST SAVING:** long-life and efficient LED light source.
- **BUILT-IN DRIVER:** quick and easy lamp replacement
- **GREAT FLEXIBILITY:** E27 standard lamp holder.
- **FUTURE-PROOFED LUMINARIES:** performances easy to upgrade to latest technology developments.
- **SUITABLE FOR OUTDOOR USE:** built-in driver fully protected against heat and humidity by silicone paste.

Lantern equipped with TÜV approved, long-life and efficient **E27 high power LED lamp**, granting the same luminous flux of traditional SON/HQI lighting sources. The lamp can be quickly and easily replaced, making the luminaries maintenance very simple.

			*ADD. SUFFIX
E27	30 W	3300 Lm	4000 K .Q1L
			3000 K .Q1R
E27	50 W	5000 Lm	4000 K .H1L
			3000 K .H1R

LED LAMPS

More technical details about TÜV approved Fumagalli LED Lamps on page 512.

** ADD THESE SUFFIXES TO THE REFERENCES MENTIONED IN THE CATALOGUE*

PHOTOMETRIC DATA SAMPLE

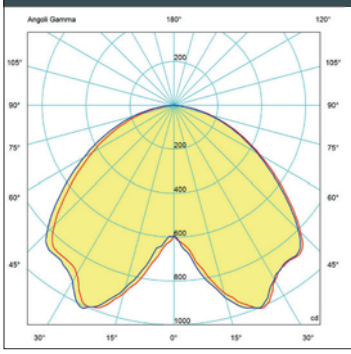

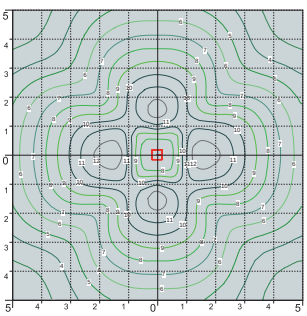

SAVE -65%

HIGH POWER LED 30W (power consumption)

Area: 10x10mt
Height: 3.5mt
15 lux

=

SIMON E27

SON 70W 84W (power consumption)

Area: 10x10mt
Height: 3.5mt
11 lux

SIMON E27

LARGE SIZE

E27 square lantern in classic style, made of shockproof resin material, UV-rays stabilized, rust and corrosion-free. Modular construction suitable for post top, hanging and wall installation. Provided with high temperature resistant ceiling suitable for ballast fixation. Insulation class II, protection rating IP 55.

Lanterna quadra E27 in stile classico, realizzata in resina antiurto, stabilizzata ai raggi UV, inattaccabile da ruggine e corrosione. Idonea per il montaggio a palo, a sospensione o a parete. Fornita con soffitto ad alta resistenza al calore idoneo per il fissaggio dei reattori. Classe di isolamento II, grado di protezione IP55.



U33.000.N1R

UV-TREATED
DOUBLE INSULATION
RECYCLABLE
ANTI-SHOCK
TEMPERATURE
PUBLIC
RESIDENTIAL
WALL
POST
HANGING

MADE IN ITALY

SIMON E27 - LANTERN COMPONENTS

IP55



Decorative **PINNACLE** to be mounted on the roof top for post installation or on the lantern base for hanging installation.

PINNACOLO *decorativo applicabile alla sommità del tetto (montaggio a palo) o sulla base della gabbia (montaggio a sospensione).*

Lantern **ROOF** made of shockproof resin material. Tool-free opening for relamping and maintenance.

TETTO *realizzato in resina antiurto. Removibile senza l'ausilio di attrezzi per manutenzione e cambio lampadina.*

High temperature resistant reflective **CEILING** made of shockproof resin material. Provided with E27 lampholder and suitable for ballast fixation.

SOFFITTO *riflettente realizzato in resina antiurto ad alta resistenza al calore. Fornito completo di portalampada E27 e idoneo per il fissaggio dei reattori.*

DIFFUSER of UV-rays stabilized PMMA, with recess for a power supply cable. One piece only closed at the base to ensure high protection against external agent.

DIFFUSORE *in PMMA resistente ai raggi UV, provvisto di sede per l'alloggiamento del cavo di alimentazione. Realizzato in un unico pezzo chiuso alla base per garantire un alto livello di protezione contro gli agenti esterni.*

CAGE made of shockproof resin material, UV-rays stabilized, rust and corrosion-free.

GABBIA *realizzata in resina antiurto, stabilizzata ai raggi UV, inattaccabile da ruggine e corrosione.*

SIMON E27

U33.000 *



Dimensions and weight
Height: 560 mm
Width: 330 mm
Depth: 330 mm
Weight: 3,8 Kg
Junction to support: diameter 60 mm
Area exposed to wind pressure:
CxS = m² 0,102

Moulded colours:
Black *White*

Painted colours:
Antique green *Antique bronze*

Diffuser PMMA:
Clear *Opal*

E27



E27 lantern supplied as an option with TÜV approved, long-life and efficient **LED filament lamps suitable for outdoor use.**
Metal plate for ballast fixation available as an option (H.BAL.PLT)

Suitable lamps: CFL-LED-SON-HQI MAX 70W		E27 lampholder only		*ADD. SUFFIX .E27
FILAMENT LED E27	8W	1000 Lm	4000 K	.M1L
			2700 K	.M1R
FILAMENT LED E27	12W	1500 Lm	4000 K	.N1L
			2700 K	.N1R

2x E27



2x E27 lantern provided as an option with TÜV approved, long-life and efficient **LED filament lamps suitable for outdoor use**. Version with daylight and motion sensor available.

Suitable lamps: CFL-LED max 160 mm		2x E27 lampholder only		*ADD. SUFFIX .E28
		2x E27 + SENSOR		.ES8
2 FILAMENT LED LAMPS	2x 8 W 16W	2000 Lm	4000 K	.M2L
			2700 K	.M2R
	2x 12 W 24W	3000 Lm	4000 K	.N2L
			2700 K	.N2R

LED LAMPS

More technical details about TÜV approved Fumagalli LED Lamps on page 512.

** ADD THESE SUFFIXES TO THE REFERENCES MENTIONED IN THE CATALOGUE*

PHOTOMETRIC DATA SAMPLE

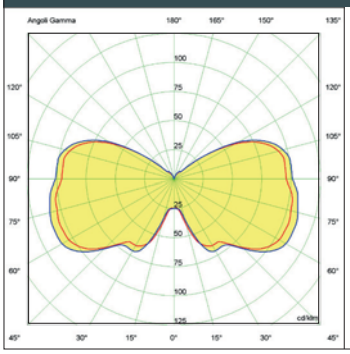

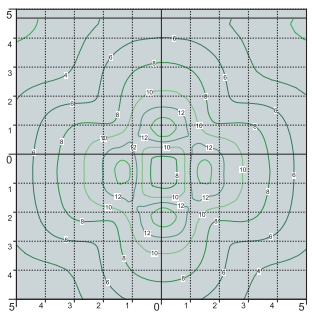

SIMON *lantern clear SON 70W.*

POST height 3.5mt
10 x 10mt area: average 11 lux

The photometric data for all the versions are available upon request or on our website.

SIMON GX53 LED - FLAT DIFFUSER

LARGE SIZE

Square lantern in classic style, made of shockproof resin material, UV-rays stabilized, rust and corrosion- free. Modular construction suitable for post top, hanging and wall installation. Supplied as standard with **FLAT diffuser** and equipped with long-life, powerful and efficient TÜV approved **GX53 LED modular system** in different wattages. Designed according to the international regulations against light pollution (standard UNI 10819). Insulation class II, Protection rating IP 65.

*Lanterna quadra in stile classico, realizzata in resina antiurto, stabilizzata ai raggi UV, inattaccabile da ruggine e corrosione. Idonea per il montaggio a palo, a sospensione o a parete. Fornita con **diffusore piatto** ed equipaggiata con **sistema modulare a LED GX53** approvato TÜV di lunga durata ed alta efficienza disponibile in diverse potenze. Progettato in ottemperanza alle norme internazionali contro l'inquinamento luminoso (standard UNI 10819). Classe di isolamento II, grado di protezione IP65.*



U35.132.D4L

MADE IN ITALY

SIMON GX53 LED - FLAT DIFFUSER

LARGE SIZE

SIMON GX53 LED - LANTERN COMPONENTS

IP65



Decorative **PINNACLE** to be mounted on the roof top for post installation or on the lantern base for hanging installation.

PINNACOLO *decorativo applicabile alla sommità del tetto (montaggio a palo) o sulla base della gabbia (montaggio a sospensione).*

LANTERN ROOF made of shockproof resin material, UV-rays stabilized. Tool-free opening for relamping and maintenance.

TETTO *realizzato in resina antiurto, stabilizzata ai raggi UV. Removibile senza l'ausilio di attrezzi per manutenzione e cambio lampadina.*

DIFFUSER with flat shape made of UV-rays stabilized polymethylmethacrylate (PMMA), provided with silicone rubber gasket to ensure an increased protection against external agent.

DIFFUSORE *in polimetilmetacrilato (PMMA) con configurazione piatta, provvisto di guarnizione in gomma siliconica per garantire una migliore protezione contro gli agenti esterni.*

CAGE made of shockproof resin material, UV-rays stabilized, rust and corrosion-free.

GABBIA *realizzata in resina antiurto, stabilizzata ai raggi UV, inattaccabile da ruggine e corrosione.*

SIMON GX53 LED

U35.000 *



Dimensions and weight
Height: 560 mm
Width: 330 mm
Depth: 330 mm
Weight: 4,6 Kg
Junction to support: diameter 60 mm
Area exposed to wind pressure:
CxS = m^2 0,102

Moulded colours:
Black *White*

Painted colours:
Antique green *Antique bronze*

Diffuser PMMA:
Clear *Opal*

GX53 LED



- **COST SAVING:** long-life and efficient LED light sources.
- **BUILT-IN DRIVER:** quick and easy lamp replacement
- **GREAT FLEXIBILITY:** GX53 standard lamp holder.
- **FUTURE-PROOFED LUMINARIES:** performances easy to upgrade to latest technology developments.
- **SUITABLE FOR OUTDOOR USE:** built-in driver fully protected against heat and humidity by silicone paste.

Lantern supplied with white resin CEILING provided with TÜV approved, long-life and efficient **4x GX53 LED lamps included**. Each lamp can be quickly and easily replaced individually, making the luminaries maintenance very simple.



			*ADD. SUFFIX
4x 7 W **28 W**	**3200 Lm**	4000 K	.C4L
		3000 K	.C4R
4x 10 W **40 W**	**4800 Lm**	4000 K	.D4L
		3000 K	.D4R

LED LAMPS

More technical details about TÜV approved Fumagalli LED Lamps on page 512.

** ADD THESE SUFFIXES TO THE REFERENCES MENTIONED IN THE CATALOGUE*

PHOTOMETRIC DATA SAMPLE

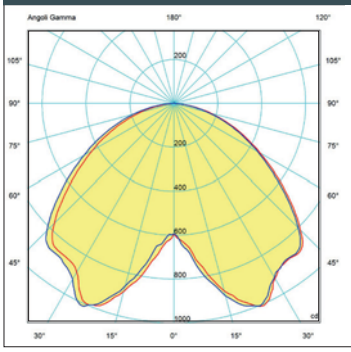

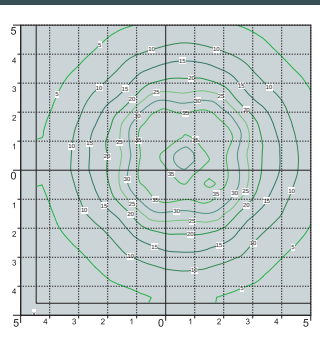



4x10W GX53 LED 40W *(power consumption)*

Area: 10x10mt
Height: 4mt
22 lux

SAVE -65%

=



SON 100W 112W *(power consumption)*

Area: 10x10mt
Height: 4mt
16 lux

SIMON

LARGE SIZE



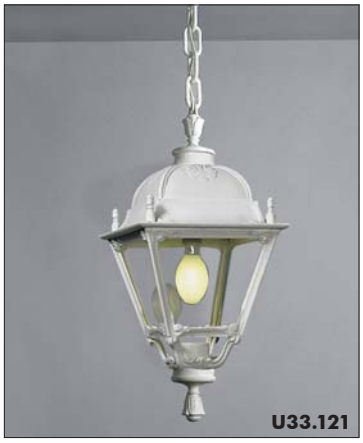







MADE IN ITALY

OFIR/SIMON

U33.132

GX53 U35.132

Pcs 1
Kg 5,6
mc 0,061

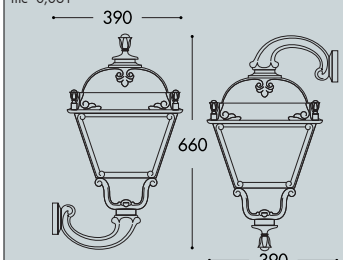

EVA/SIMON

U33.181

GX53 U35.181

Pcs 1
Kg 12,3
mc 0,168

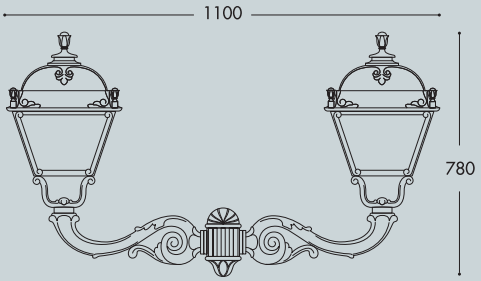

SIMON

U33.000

GX53 U35.000

Pcs 1
Kg 4,6
mc 0,043

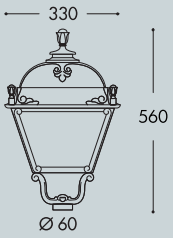

LOT/SIMON

U33.113

GX53 U35.113

Pcs 1
Kg 5,8
mc 0,061

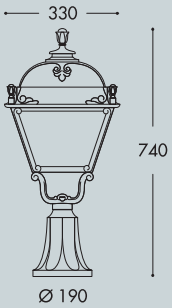

MIRRA/SIMON

U33.142

GX53 U35.142

Pcs 1
Kg 10,9
mc 0,083

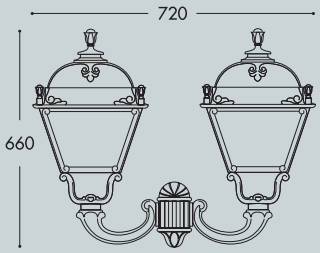

SICHEM/SIMON

U33.121

GX53 U35.121

Pcs 1
Kg 5,4
mc 0,061

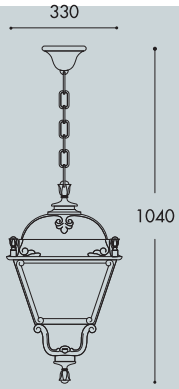

RICU/SIMON

U33.157

GX53 U35.157

Pcs 2
Kg 29,2
mc 0,334

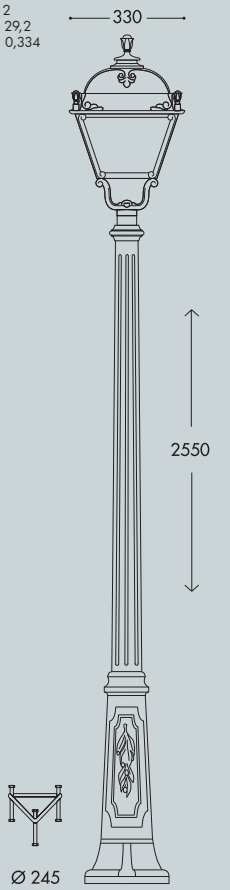

GIGI/SIMON

U33.156

GX53 U35.156

Pcs 2
Kg 27,7
mc 0,304



ARTU'/SIMON

U33.158

GX53 U35.158

Pcs 2
Kg 24,7
mc 0,273

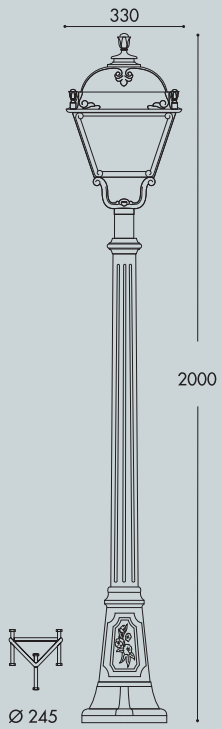

ALOE'/SIMON

U33.163 resin

GX53 U35.163 resin

Pcs 2
Kg 15,2
mc 0,208

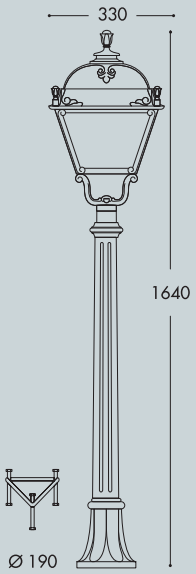

IAFET.R/SIMON

U33.162 resin

GX53 U35.162 resin

Pcs 2
Kg 14,5
mc 0,179

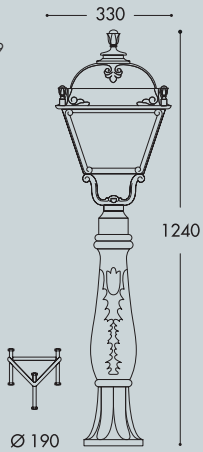

NEBO/SIMON

LARGE SIZE







MADE IN ITALY

NEBO OFIR/SIMON 2L

	U33.201.R20
GX53	U35.201.R20

Pcs 1
Kg 31,9
mc 0,268

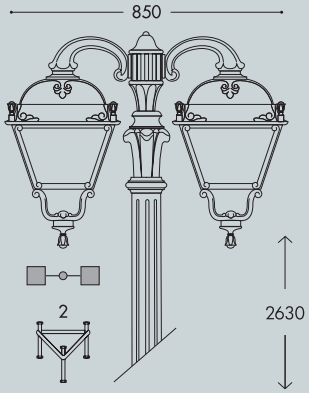

NEBO OFIR/SIMON 3L

	U33.201.R30
GX53	U35.201.R30

Pcs 1
Kg 36,5
mc 0,342

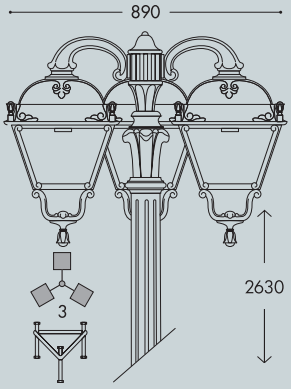

NEBO/SIMON

	U33.201
GX53	U35.201

Pcs 1
Kg 25,6
mc 0,196

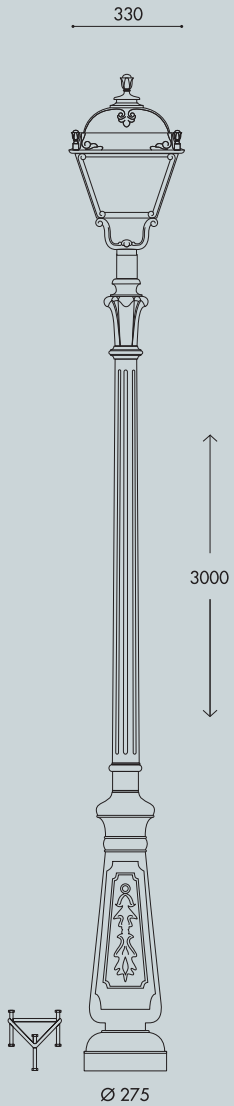

NEBO OFIR/SIMON 2L

	U33.201.R20
GX53	U35.201.R20

Pcs 1
Kg 31,9
mc 0,268

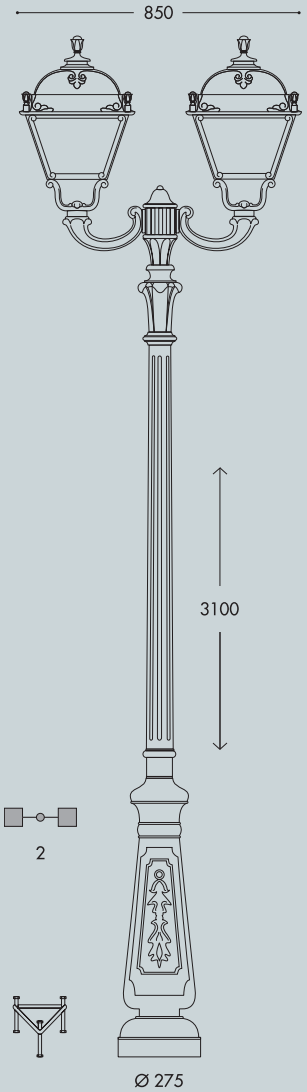

NEBO OFIR/SIMON 3L

	U33.201.R30
GX53	U35.201.R30

Pcs 1
Kg 36,5
mc 0,342

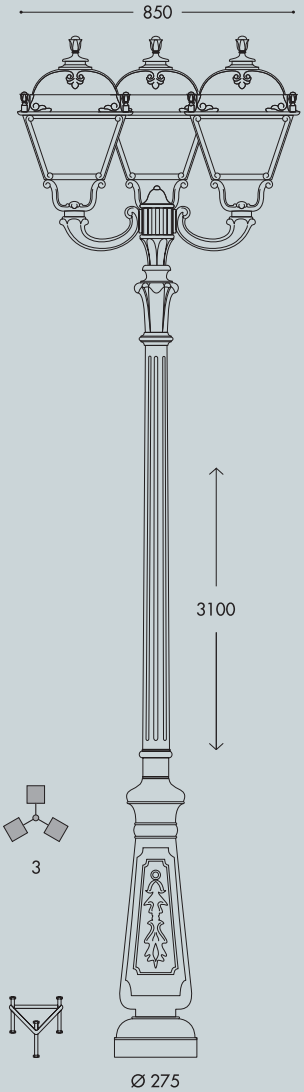

TABOR/SIMON

LARGE SIZE







MADE IN ITALY

TABOR OFIR/SIMON 2L

U33.204.R20

GX53 U35.204.R20

Pcs 1
Kg 36,5
mc 0,268

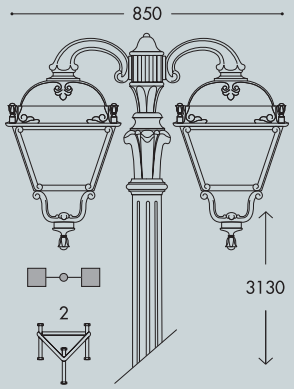

TABOR OFIR/SIMON 3L

U33.204.R30

GX53 U35.204.R30

Pcs 1
Kg 41,1
mc 0,342

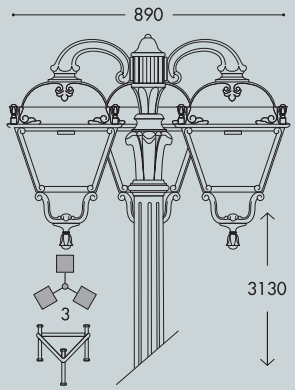

TABOR/SIMON

U33.204

GX53 U35.204

Pcs 1
Kg 30,1
mc 0,196

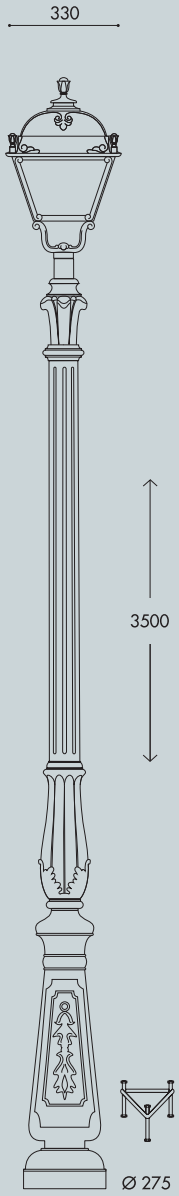

TABOR OFIR/SIMON 2L

U33.204.R20

GX53 U35.204.R20

Pcs 1
Kg 36,5
mc 0,268

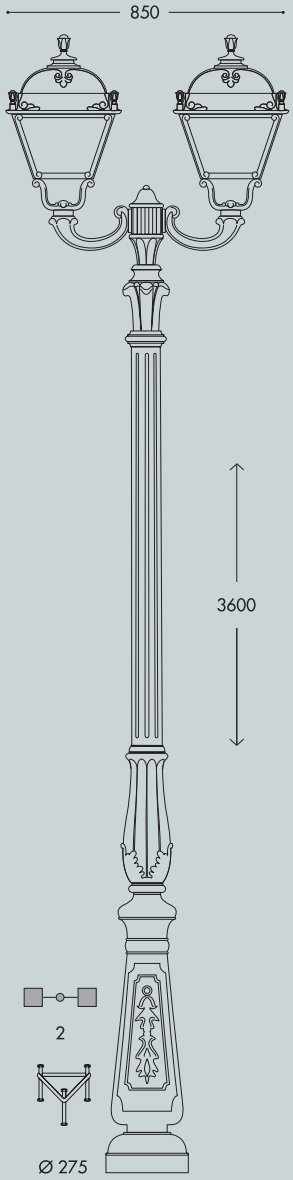

TABOR OFIR/SIMON 3L

U33.204.R30

GX53 U35.204.R30

Pcs 1
Kg 41,1
mc 0,342

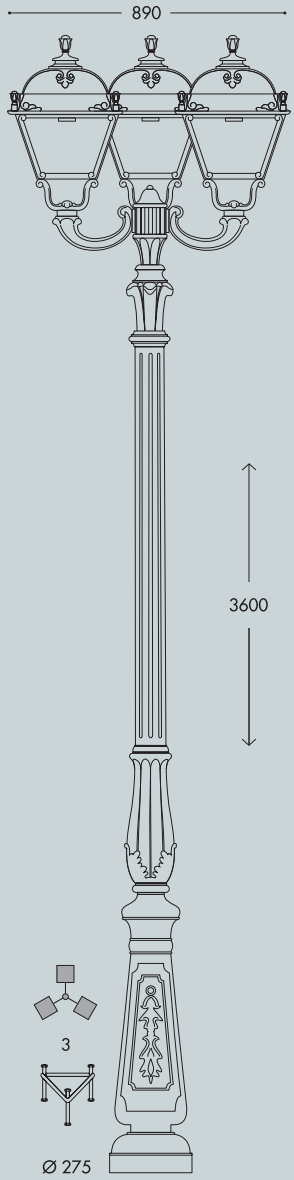

HOREB/SIMON

LARGE SIZE







MADE IN ITALY

HOREB ADAM/SIMON 1L

U33.207.M10

GX53 U35.207.M10

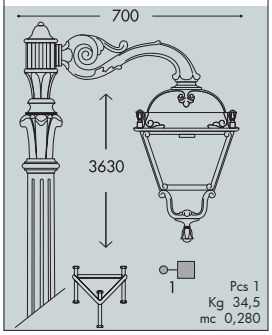

ADAM/SIMON

U33.171

GX53 U35.171

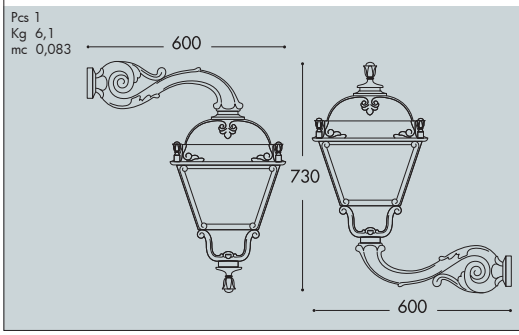

HOREB ADAM/SIMON 2+1

U33.207.M21

GX53 U35.207.M21

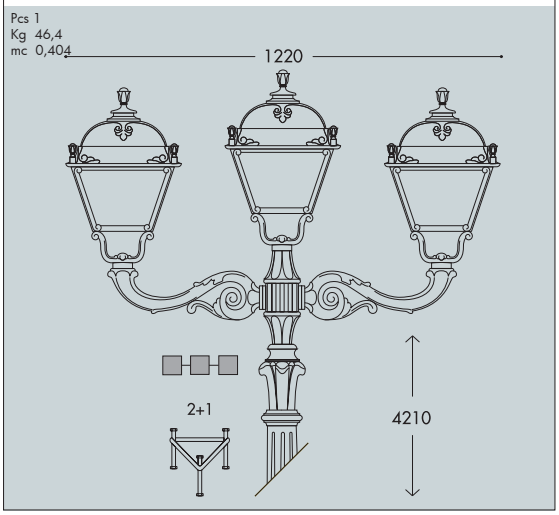

HOREB/SIMON

U33.207

GX53 U35.207

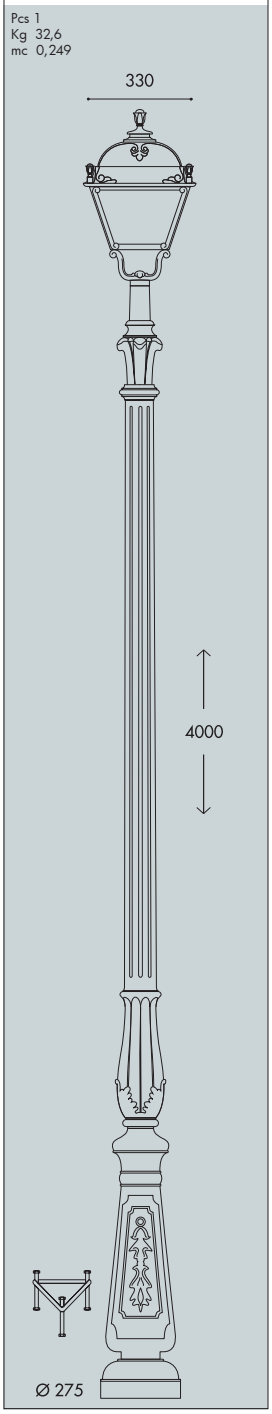

HOREB ADAM/SIMON 3+1

U33.207.M31

GX53 U35.207.M31

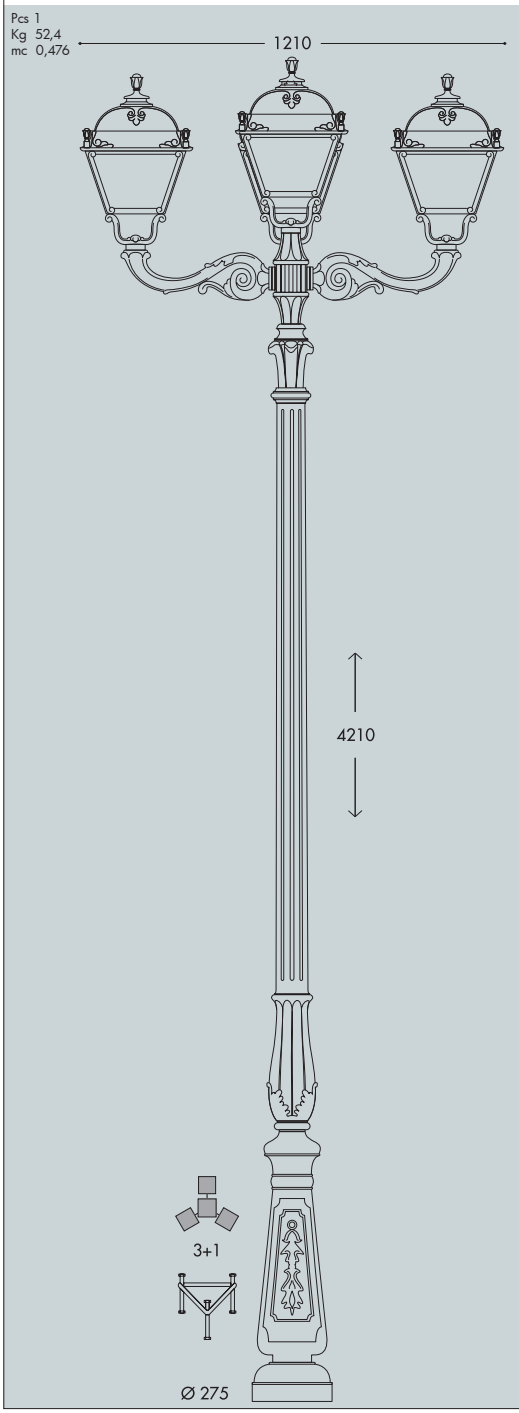

HOREB ADAM/SIMON 3L

U33.207.M30

GX53 U35.207.M30

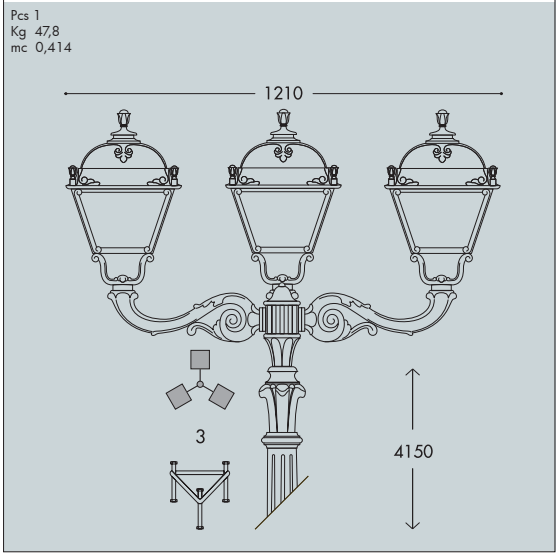

HOREB ADAM/SIMON 2L

U33.207.M20

GX53 U35.207.M20

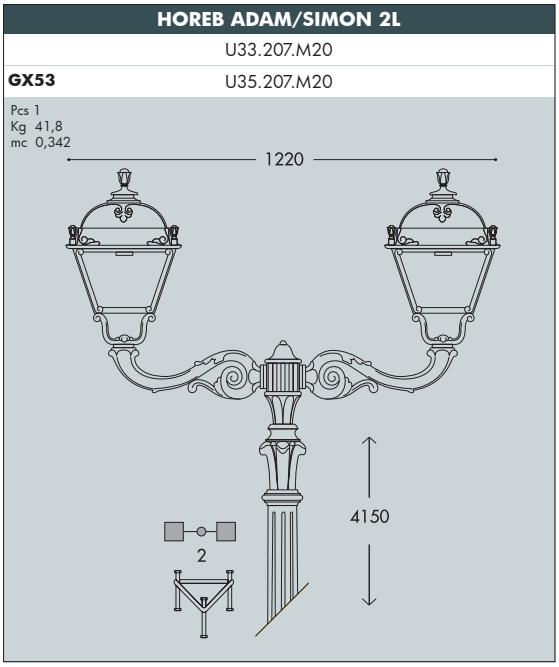

KARMEL 3000/SIMON

LARGE SIZE







MADE IN ITALY



KARMEL 3000/SIMON

LARGE SIZE

KARMEL 3000 OFIR/SIMON 2L

U33.231.R20

GX53 U35.231.R20

Pcs 1
Kg 36,5
mc 0,295

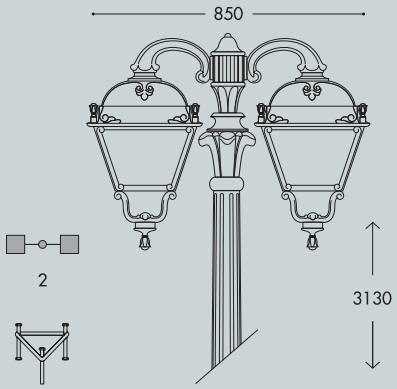

KARMEL 3000 OFIR/SIMON 3L

U33.231.R30

GX53 U35.231.R30

Pcs 1
Kg 41,1
mc 0,369

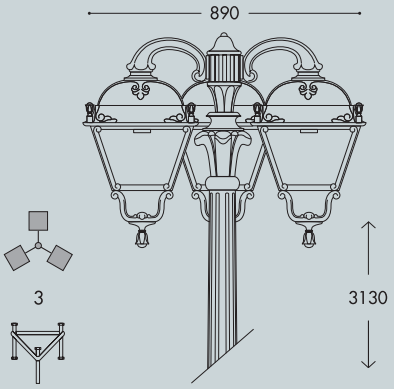

KARMEL 3000/SIMON

U33.231

GX53 U35.231

Pcs 1
Kg 30,1
mc 0,223

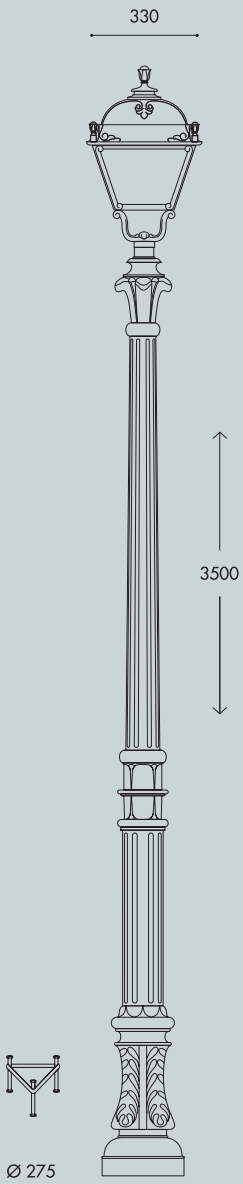

KARMEL 3000 OFIR/SIMON 2L

U33.231.R20

GX53 U35.231.R20

Pcs 1
Kg 36,5
mc 0,295

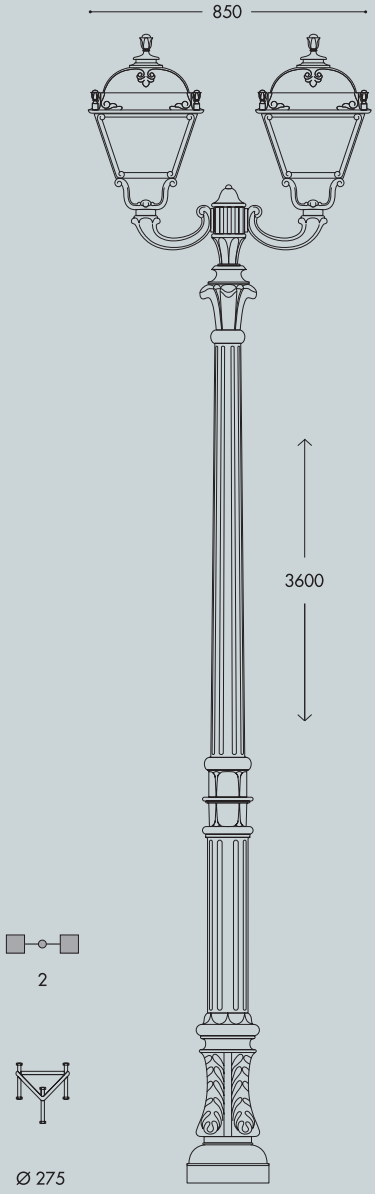

KARMEL 3000 OFIR/SIMON 3L

U33.231.R30

GX53 U35.231.R30

Pcs 1
Kg 41,1
mc 0,369

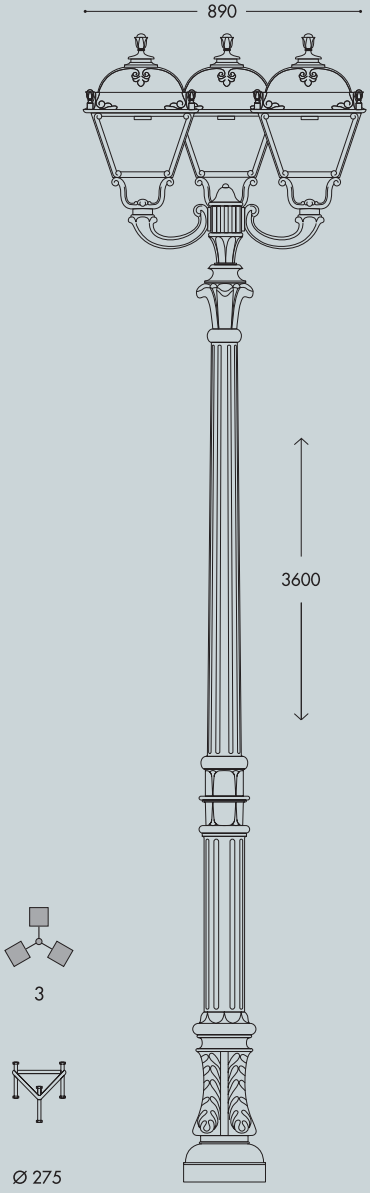

KARMEL 3500-4000/SIMON

LARGE SIZE







MADE IN ITALY



KARMEL 3500-4000/SIMON

LARGE SIZE

KARMEL 3500 ADAM/SIMON 1L	KARMEL 4000 ADAM/SIMON 1L
U33.234.M10	U33.237.M10
GX53 U35.234.M10	U35.237.M10

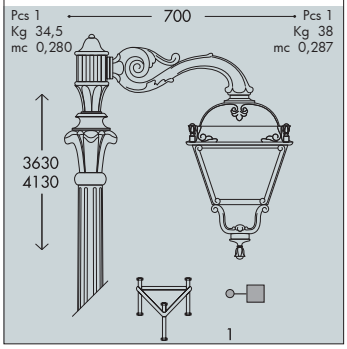

KARMEL 3500/SIMON
U33.234
GX53 U35.234

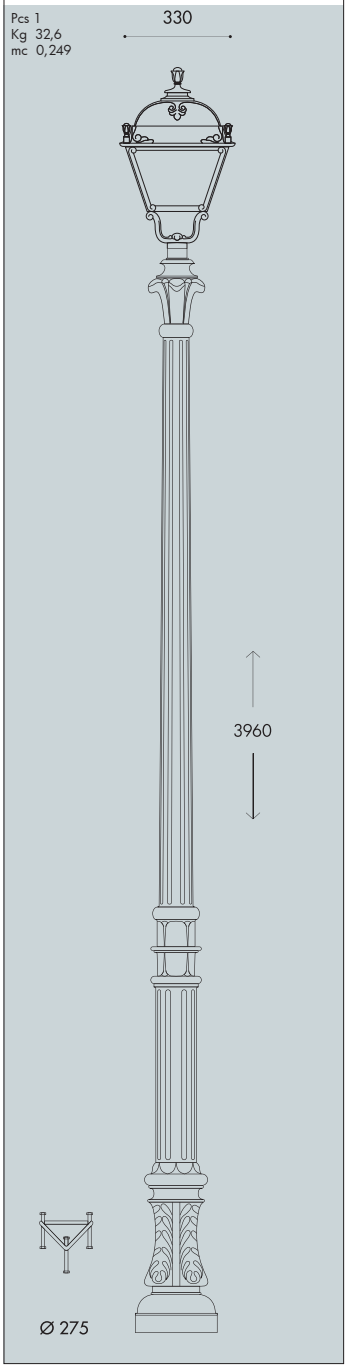

KARMEL 3500 ADAM/SIMON 2+1	KARMEL 4000 ADAM/SIMON 2+1
U33.234.M21	U33.237.M21
GX53 U35.234.M21	U35.237.M21

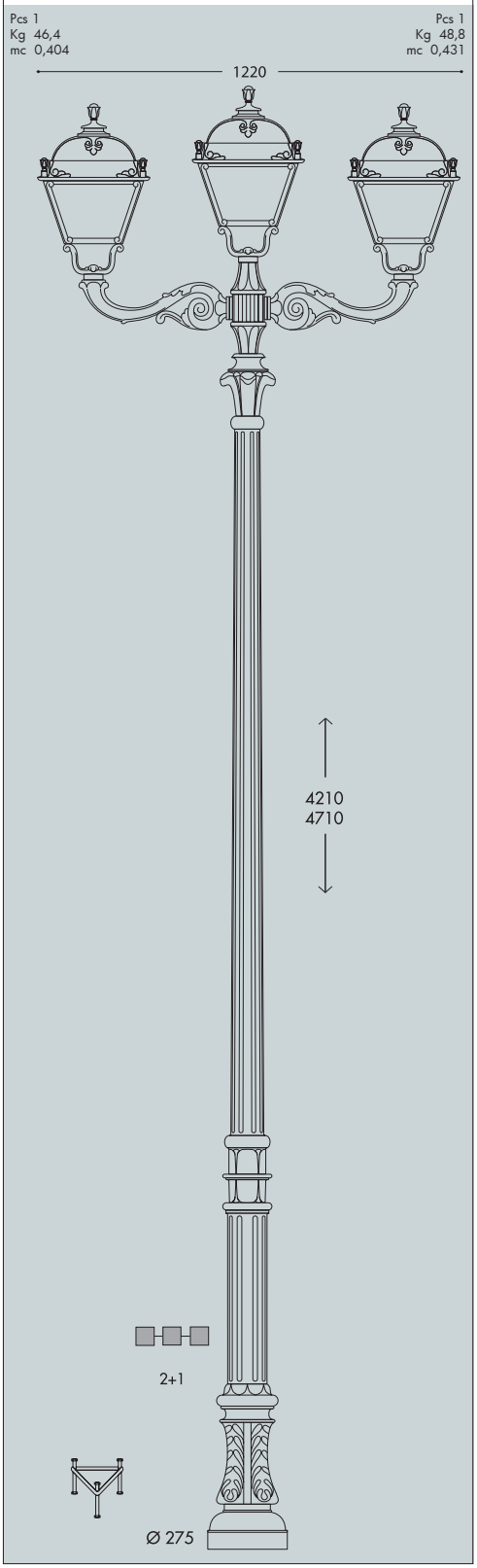

KARMEL 3500 ADAM/SIMON 3L	KARMEL 4000 ADAM/SIMON 3L
U33.234.M30	U33.237.M30
GX53 U35.234.M30	U35.237.M30

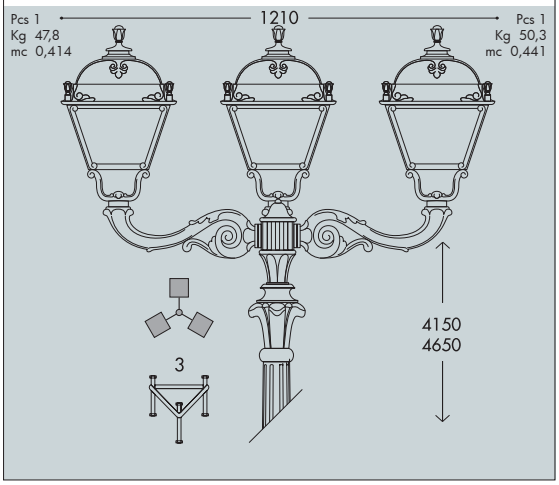

KARMEL 3500 ADAM/SIMON 3+1	KARMEL 4000 ADAM/SIMON 3+1
U33.234.M31	U33.237.M31
GX53 U35.234.M31	U35.237.M31

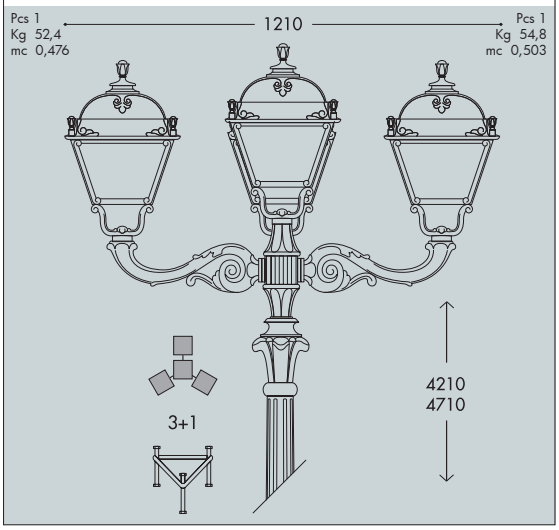

KARMEL 3500 ADAM/SIMON 2L	KARMEL 4000 ADAM/SIMON 2L
U33.234.M20	U33.237.M20
GX53 U35.234.M20	U35.237.M20

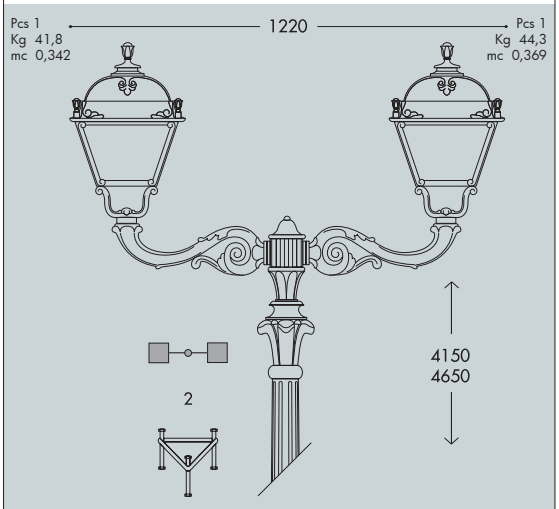

ELIA E27

GRAND SIZE

E27 square lantern in classic style, made of shockproof resin material, UV-rays stabilized, rust and corrosion-free. Modular construction suitable for post top, hanging and wall installation. Provided with high temperature resistant ceiling suitable for ballast fixation. Insulation class II, protection rating IP 55.

Lanterna quadra E27 in stile classico, realizzata in resina antiurto, stabilizzata ai raggi UV, inattaccabile da ruggine e corrosione. Idonea per il montaggio a palo, a sospensione o a parete. Fornita con soffitto ad alta resistenza al calore idoneo per il fissaggio dei reattori. Classe di isolamento II, grado di protezione IP55.



Q43.000.E27

CE · UV-TREATED · DOUBLE INSULATION · RECYCLABLE · ANTI-SHOCK · +90° -60° TEMPERATURE

PUBLIC · WALL · POST · HANGING

MADE IN ITALY

ELIA E27 - LANTERN COMPONENTS

IP55



Decorative **PINNACLE** to be mounted on the roof top for post installation or on the lantern base for hanging installation.

PINNACOLO *decorativo applicabile alla sommità del tetto (montaggio a palo) o sulla base della gabbia (montaggio a sospensione).*

ROOF made of shockproof resin material, UV-rays stabilized. Tool-free opening for relamping and access to control-gear.

TETTO *realizzato in resina antiurto, stabilizzata ai raggi UV. Removibile senza l'ausilio di attrezzi per manutenzione e cambio lampadina.*

High temperature resistant reflective **CEILING** made of shockproof resin material. Provided with E27 lampholder and suitable for ballast fixation.

SOFFITTO *riflettente realizzato in resina antiurto ad alta resistenza al calore. Fornito completo di portalampada E27 e idoneo per il fissaggio dei reattori.*

DIFFUSER of UV-rays stabilized PMMA, with recess for a power supply cable. One piece only closed at the base to ensure high protection against external agent.

DIFFUSORE *in PMMA resistente ai raggi UV, provvisto di sede per l'alloggiamento del cavo di alimentazione. Realizzato in un unico pezzo chiuso alla base per garantire un alto livello di protezione contro gli agenti esterni*

CAGE made of shockproof resin material, UV-rays stabilized, rust and corrosion-free.

GABBIA *realizzata in resina antiurto, stabilizzata ai raggi UV, inattaccabile da ruggine e corrosione.*

ELIA E27

Q43.000 *



Dimensions and weight
Height: 740 mm
Width: 430 mm
Depth: 430 mm
Weight: 7,5 Kg
Junction to support: diameter 60 mm
Area exposed to wind pressure:
CxS = m² 0,165

Moulded colours:
Black *White*

Painted colours:
Antique green *Antique bronze*

Diffuser PMMA:
Clear *Opal*

CHROME ALUMINIUM LOUVRE

H.FC6 open
Downward position



E27-E40



Lantern supplied with **E27** or **E40 lampholder**. Metal plate for ballast fixation available as an option (H.BAL.PLT)

suitable lamps: CFL-LED SON-HQI max 100W	**E27** Lampholder only	.E27
	E40 Lampholder only	.E40

** ADD THESE SUFFIXES TO THE REFERENCES MENTIONED IN THE CATALOGUE*

PHOTOMETRIC DATA SAMPLE

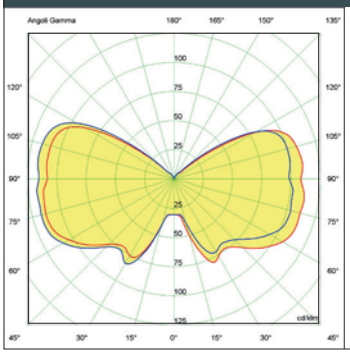

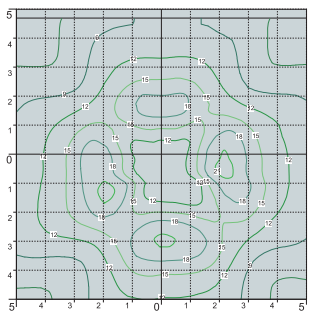

ELIA *lantern clear SON 100W.*

POST height 4,5mt
10 x 10mt area: average 12 lux

The photometric data for all the versions are available upon request or on our website.

ELIA GX53 LED - FLAT DIFFUSER

GRAND SIZE

Square lantern in classic style, made of shockproof resin material, UV-rays stabilized, rust and corrosion- free. Modular construction suitable for post top, hanging and wall installation. Supplied as standard with **FLAT diffuser** and equipped with long-life, powerful and efficient TÜV approved GX53 LED modular system in different wattages. Designed according to the international regulations against light pollution (standard UNI 10819). Insulation class II, Protection rating IP 65.

*Lanterna quadra in stile classico, realizzata in resina antiurto, stabilizzata ai raggi UV, inattaccabile da ruggine e corrosione. Idonea per il montaggio a palo, a sospensione o a parete. Fornita con **diffusore piatto** ed equipaggiata con sistema modulare a LED GX53 approvato TÜV di lunga durata ed alta efficienza disponibile in diverse potenze. Progettato in ottemperanza alle norme internazionali contro l'inquinamento luminoso (standard UNI 10819). Classe di isolamento II, grado di protezione IP65.*



Q45.000.D8L

MADE IN ITALY

ELIA GX53 LED - LANTERN COMPONENTS

IP65



Decorative **PINNACLE** to be mounted on the roof top for post installation or on the lantern base for hanging installation.

PINNACOLO *decorativo applicabile alla sommità del tetto (montaggio a palo) o sulla base della gabbia (montaggio a sospensione).*

LANTERN ROOF made of shockproof resin material, UV-rays stabilized. Tool-free opening for relamping and maintenance.

TETTO *realizzato in resina antiurto, stabilizzata ai raggi UV. Removibile senza l'ausilio di attrezzi per manutenzione e cambio lampadina.*

DIFFUSER with FLAT shape made of UV-rays stabilized polymethylmethacrylate (PMMA), provided with silicone rubber gasket to ensure an increased protection against external agent.

DIFFUSORE *in polimetilmetacrilato (PMMA) con configurazione piatta, provvisto di guarnizione in gomma siliconica per garantire una migliore protezione contro gli agenti esterni.*

CAGE made of shockproof resin material, UV-rays stabilized, rust and corrosion-free.

GABBIA *realizzata in resina antiurto, stabilizzata ai raggi UV, inattaccabile da ruggine e corrosione.*

ELIA GX53 LED

Q45.000 *



Dimensions and weight
Height: 740 mm
Width: 430 mm
Depth: 430 mm
Weight: 9,1 Kg

Area exposed to wind pressure:
CxS = m² 0,165

Moulded colours:
Black *White*

Painted colours:
Antique green *Antique bronze*

Diffuser PMMA:
Clear *Opal*

GX53 LED



- **COST SAVING:** long-life and efficient LED light sources.
- **BUILT-IN DRIVER:** quick and easy lamp replacement
- **GREAT FLEXIBILITY:** GX53 standard lamp holder.
- **FUTURE-PROOFED LUMINARIES:** performances easy to upgrade to latest technology developments.
- **SUITABLE FOR OUTDOOR USE:** built-in driver fully protected against heat and humidity by silicone paste.

Lantern supplied with white resin CEILING provided with TÜV approved, long-life and efficient **8xGX53 LED lamps included**. Each lamp can be quickly and easily replaced individually, making the luminaries maintenance very simple.

				*ADD. SUFFIX
GX53 LED	8x 7 W **56 W**	**6400 Lm**	4000 K	.C8L
			3000 K	.C8R
	8x 10 W **80 W**	**9600 Lm**	4000 K	.D8L
			3000 K	.D8R

LED LAMPS

More technical details about TÜV approved Fumagalli LED Lamps on page 512.

** ADD THESE SUFFIXES TO THE REFERENCES MENTIONED IN THE CATALOGUE*

PHOTOMETRIC DATA SAMPLE

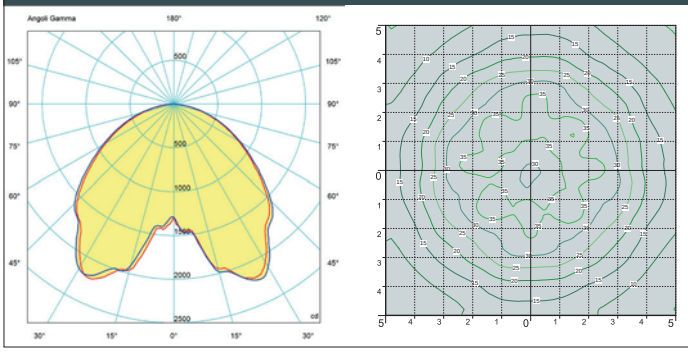

SAVE **-66%**

8x7W GX53 LED
56W
(power consumption)

Area: 10x10mt
Height: 4,5mt
28 lux

=

SON 150W
165W
(power consumption)

Area: 10x10mt
Height: 4,5mt
17 lux

ELIA

GRAND SIZE



GIONA 5000/ELIA

	Q43.227
GX53	Q45.227

Pcs 1
Kg 67,5
mc 1,112

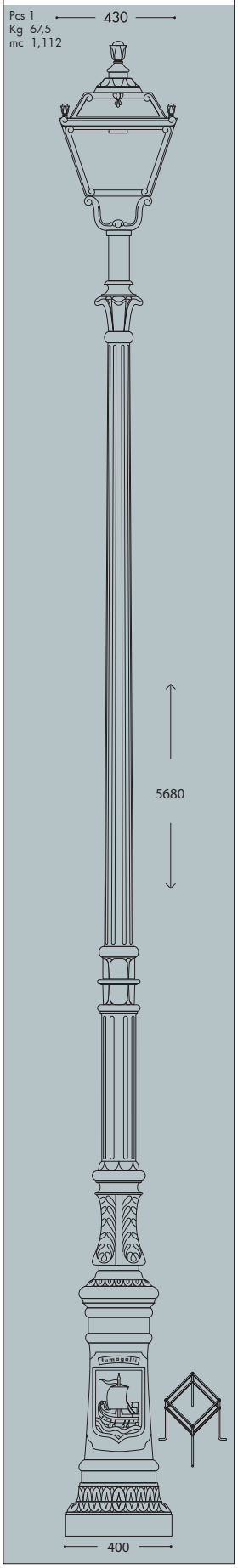

GIONA 4000/ELIA | GIONA 4500/ELIA

	Q43.221	Q43.224
GX53	Q45.221	Q45.224

Pcs 1
Kg 62,5
mc 0,862

Pcs 1
Kg 65,5
mc 0,982

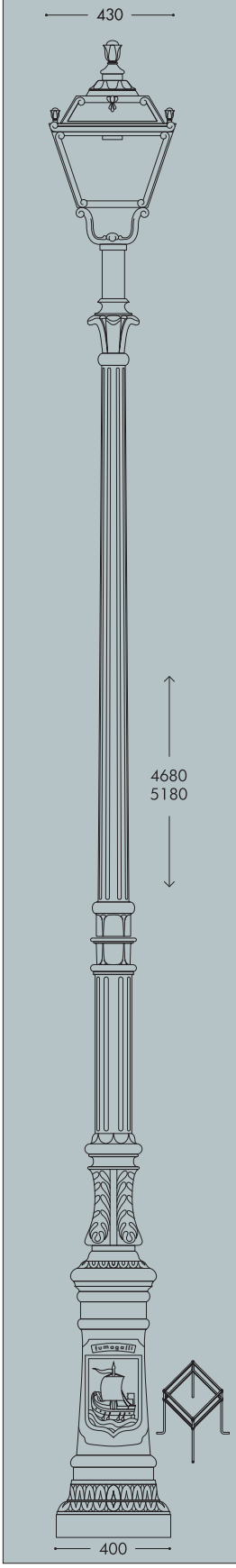

KARMEL 3500/ELIA | KARMEL 4000/ELIA

	Q43.234	Q43.237
GX53	Q45.234	Q45.237

Pcs 1
Kg 38,6
mc 0,402

Pcs 1
Kg 42
mc 0,453

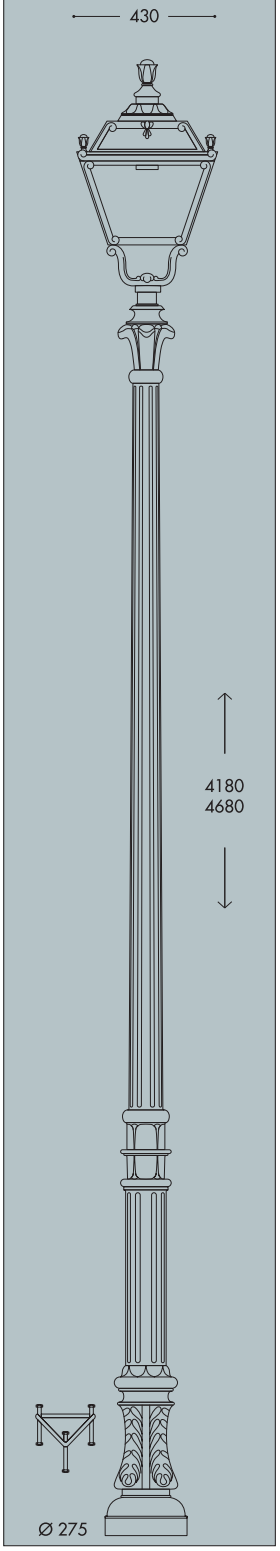

SICHEM/ELIA

	Q43.121
GX53	Q45.121

Pcs 1
Kg 8
mc 0,182

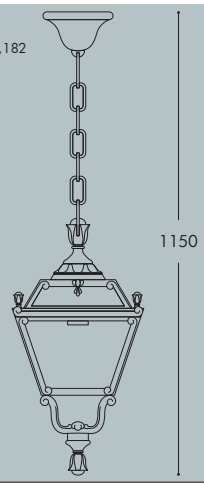

KARMEL 3000/ELIA

	Q43.231
GX53	Q45.231

Pcs 1
Kg 33
mc 0,362

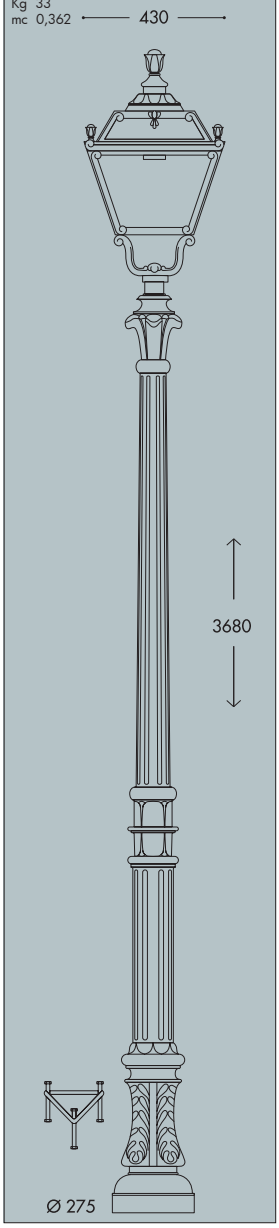

ELIA

	Q43.000
GX53	Q45.000

Pcs 1
Kg 7,5
mc 0,182

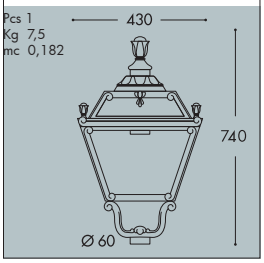

TABOR/ELIA | HOREB/ELIA

	Q43.204	Q43.207
GX53	Q45.204	Q45.207

Pcs 1
Kg 33
mc 0,362

Pcs 1
Kg 35,5
mc 0,402

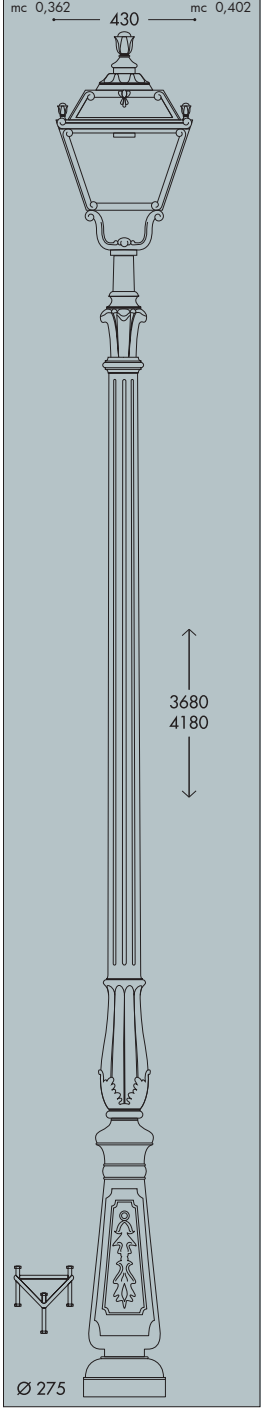

GIONA 4000/ELIA

GRAND SIZE

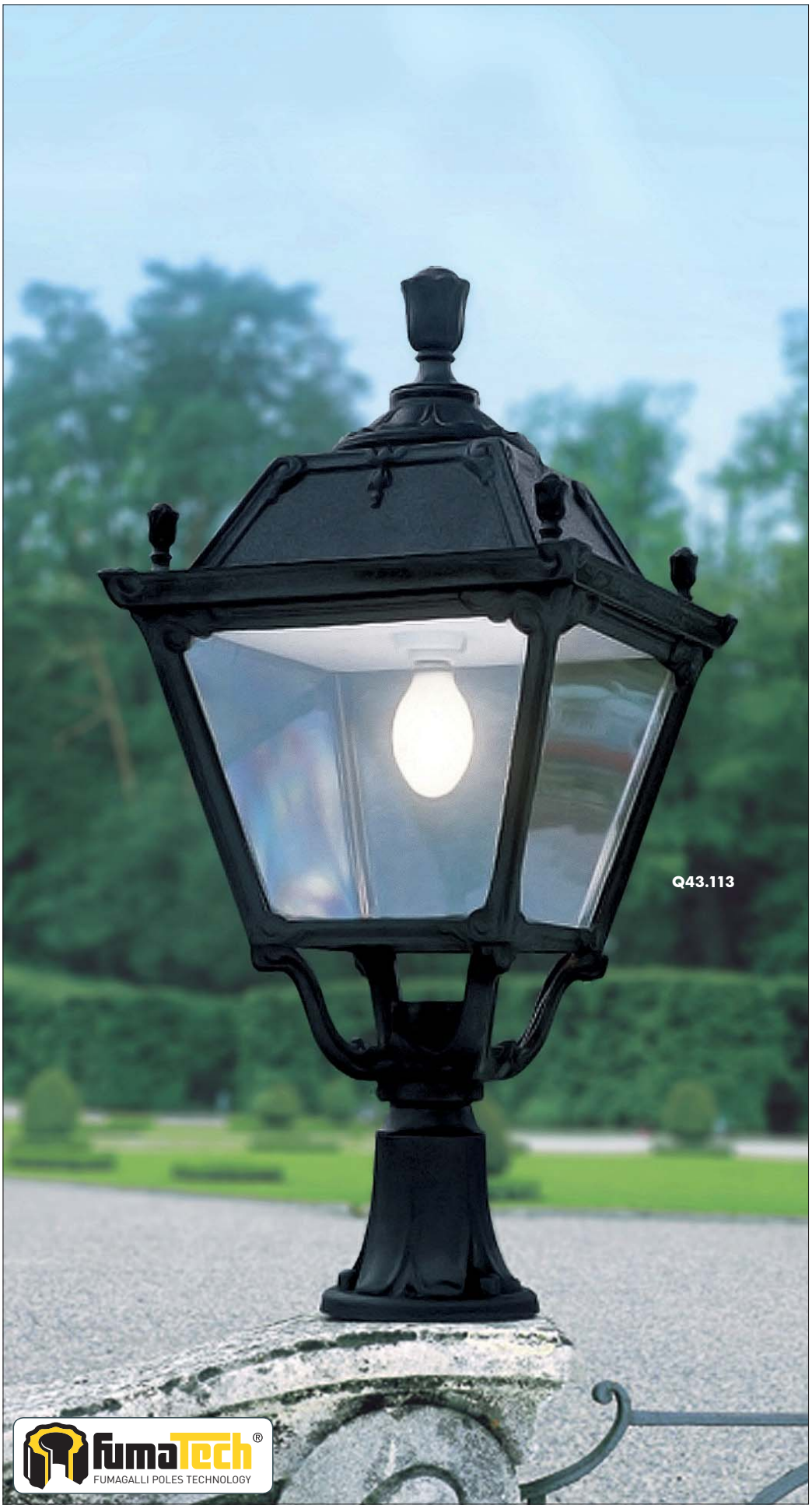





MADE IN ITALY

ADAM/ELIA

	Q43.171
GX53	Q45.171

Pcs 1
Kg 9
mc 0,190

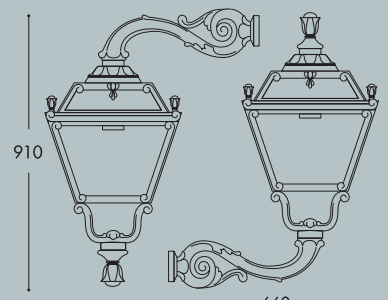

GIONA 4000 ADAM/ELIA 1L

	Q43.221.M10
GX53	Q45.221.M10

Pcs 1
Kg 64
mc 0,752

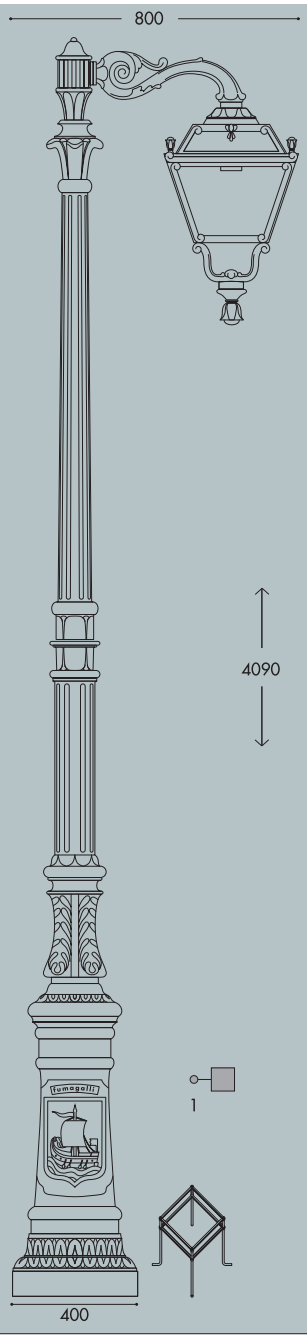

GIONA 4000 ADAM/ELIA 2L

	Q43.221.M20
GX53	Q45.221.M20

Pcs 1
Kg 73
mc 0,863

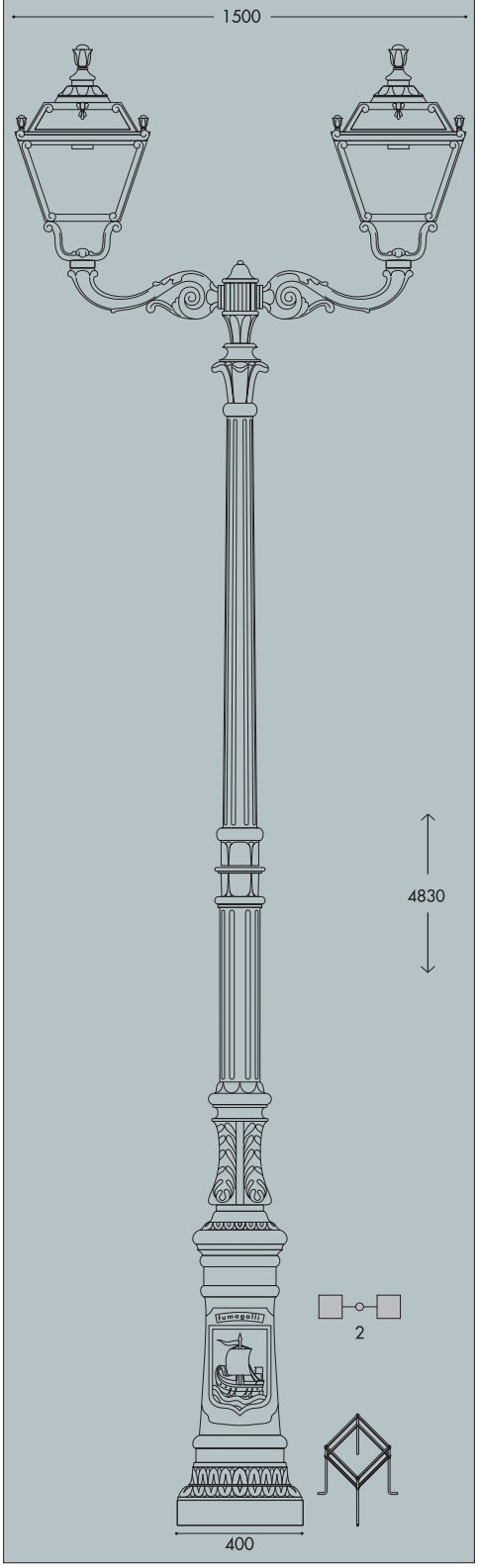

LOT/ELIA

	Q43.113
GX53	Q45.113

Pcs 1
Kg 8,4
mc 0,182

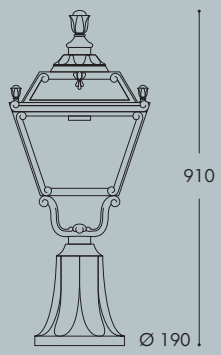

GIONA 4000 ADAM/ELIA 3L

	Q43.221.M30
GX53	Q45.221.M30

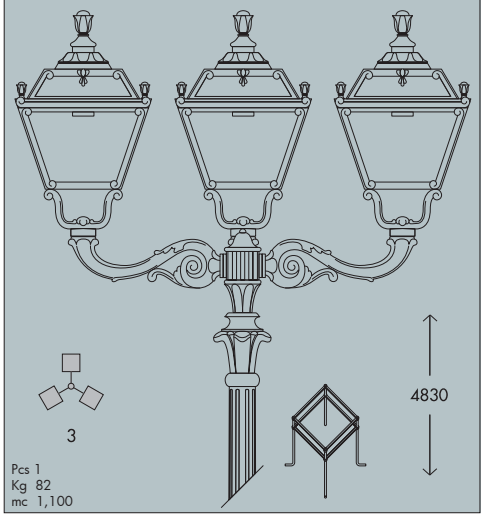

Pcs 1
Kg 82
mc 1,100

GIONA 4000 ADAM/ELIA 2+1

	Q43.221.M21
GX53	Q45.221.M21

Pcs 1
Kg 80,5
mc 0,931

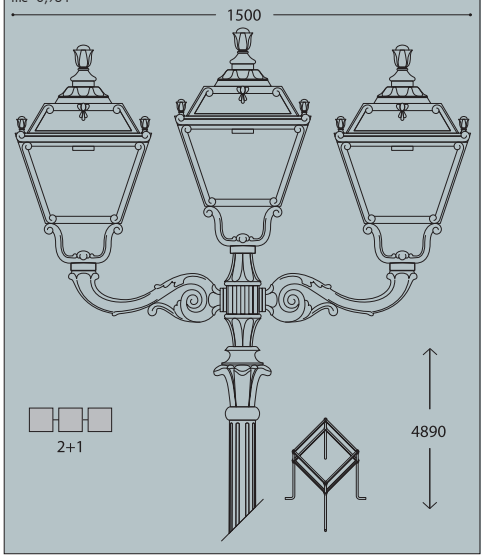

GIONA 4500-5000/ELIA

GRAND SIZE





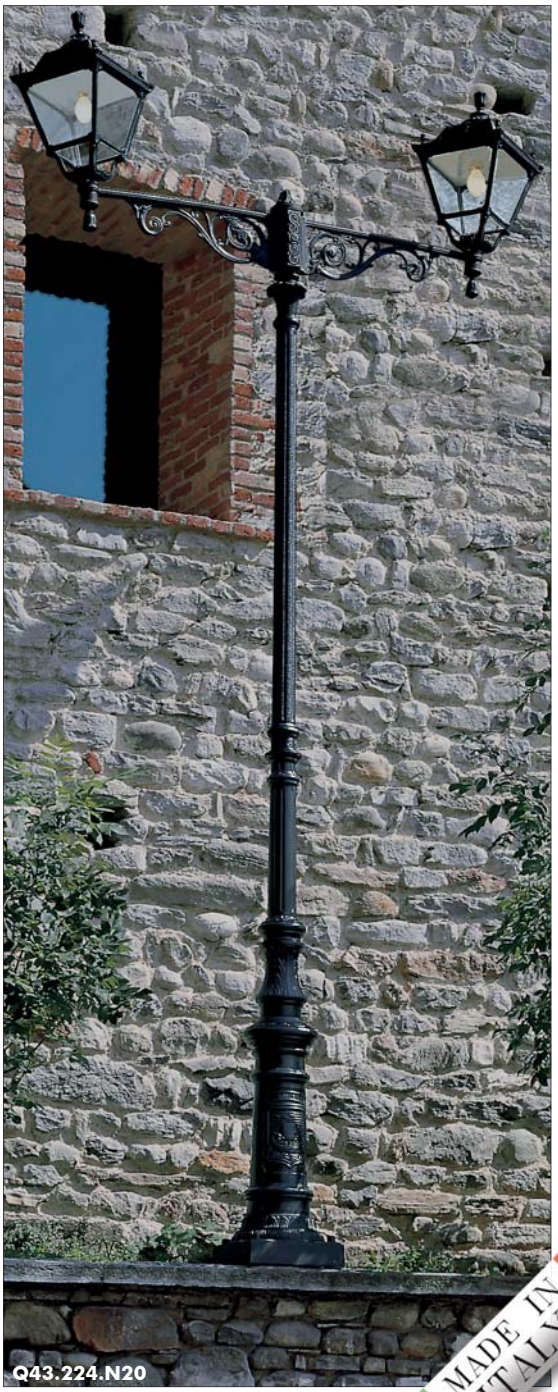

MADE IN ITALY

GIONA 4500 ARON/ELIA	GIONA 5000 ARON/ELIA
Q43.224.N10	Q43.227.N10
GX53 Q45.224.N10	**GX53** Q45.227.N10

Pcs 1
Kg 71,5
mc 0,949

Pcs 1
Kg 73,5
mc 1,191

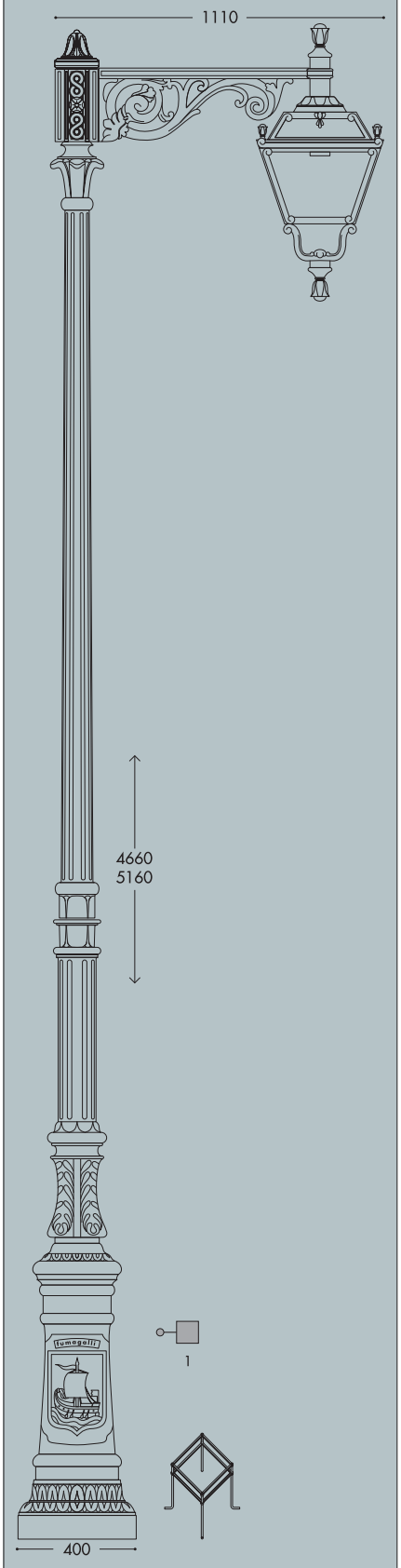

ARON/ELIA
Q43.172
GX53 Q45.172

Pcs 1
Kg 13
mc 0,223

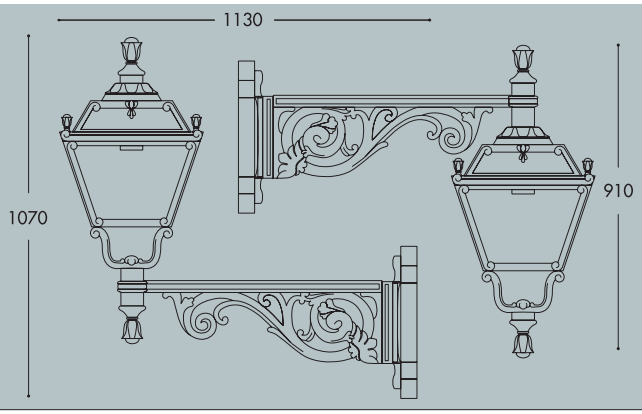

GIONA 4500 ARON/ELIA 2L	GIONA 5000 ARON/ELIA 2L
Q43.224.N20	Q43.227.N20
GX53 Q45.224.N20	**GX53** Q45.227.N20

Pcs 1
Kg 82,5
mc 1,196

Pcs 1
Kg 84,5
mc 1,329

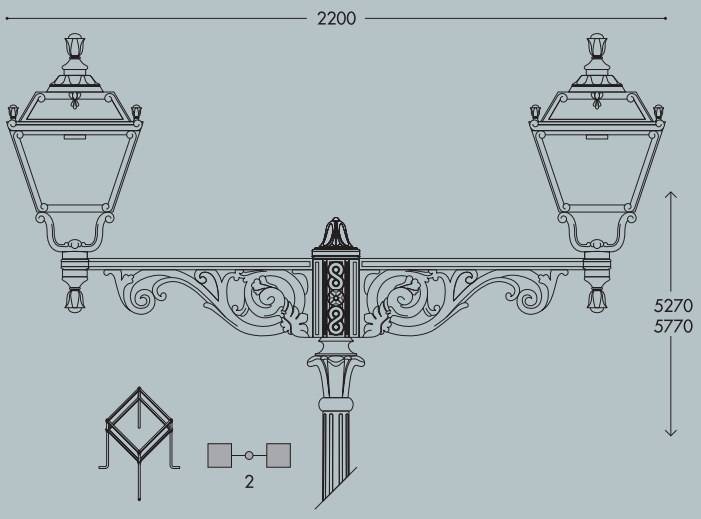

GIONA 4500 ARON/ELIA 4L	GIONA 5000 ARON/ELIA 4L
Q43.224.N40	Q43.227.N40
GX53 Q45.224.N40	**GX53** Q45.227.N40

Pcs 1
Kg 105
mc 1,444

Pcs 1
Kg 107
mc 1,605

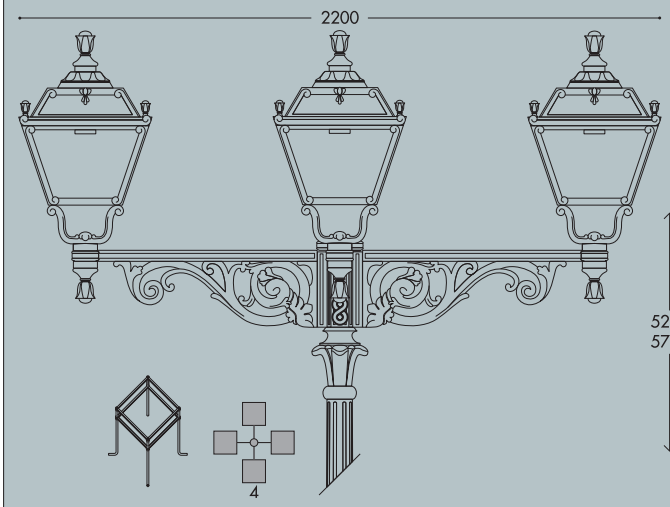

ERMON.R/ELIA
Q43.195 resin
GX53 Q45.195 resin

Pcs 1
Kg 13,5
mc 0,250

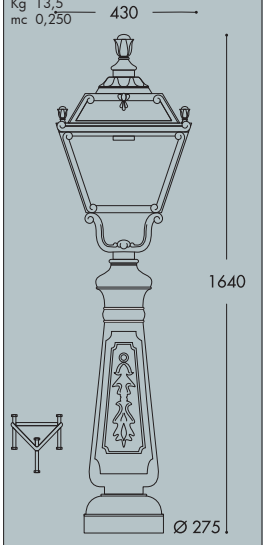

PIETRO E27

GRAND SIZE

E27 square lantern in classic style, made of shockproof resin material, UV-rays stabilized, rust and corrosion-free. Modular construction suitable for post top, hanging and wall installation. Provided with high temperature resistant ceiling suitable for ballast fixation. Insulation class II, protection rating IP 55.

Lanterna quadra E27 in stile classico, realizzata in resina antiurto, stabilizzata ai raggi UV, inattaccabile da ruggine e corrosione. Idonea per il montaggio a palo, a sospensione o a parete. Fornita con soffitto ad alta resistenza al calore idoneo per il fissaggio dei reattori. Classe di isolamento II, grado di protezione IP55.

U43.000.E27

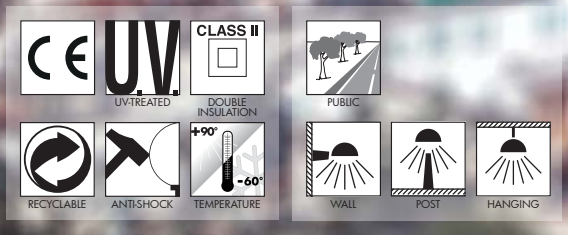

MADE IN ITALY

PIETRO E27 - LANTERN COMPONENTS

IP55



Decorative **PINNACLE** to be mounted on the roof top for post installation or on the lantern base for hanging installation.

PINNACOLO *decorativo applicabile alla sommità del tetto (montaggio a palo) o sulla base della gabbia (montaggio a sospensione).*

ROOF made of shockproof resin material, UV-rays stabilized. Tool-free opening for relamping and access to control-gear.

TETTO *realizzato in resina antiurto, stabilizzata ai raggi UV. Removibile senza l'ausilio di attrezzi per manutenzione e cambio lampadina.*

High temperature resistant reflective **CEILING** made of shockproof resin material. Provided with E27 lampholder and suitable for ballast fixation.

SOFFITTO *riflettente realizzato in resina antiurto ad alta resistenza al calore. Fornito completo di portalampada E27 e idoneo per il fissaggio dei reattori.*

DIFFUSER of UV-rays stabilized PMMA, with recess for a power supply cable. One piece only closed at the base to ensure high protection against external agent.

DIFFUSORE *in PMMA resistente ai raggi UV, provvisto di sede per l'alloggiamento del cavo di alimentazione. Realizzato in un unico pezzo chiuso alla base per garantire un alto livello di protezione contro gli agenti esterni*

CAGE made of shockproof resin material, UV-rays stabilized, rust and corrosion-free.

GABBIA *realizzata in resina antiurto, stabilizzata ai raggi UV, inattaccabile da ruggine e corrosione.*

PIETRO E27

U43.000 *



Dimensions and weight
Height: 770 mm
Width: 430 mm
Depth: 430 mm
Weight: 7,5 Kg
Junction to support: diameter 60 mm
Area exposed to wind pressure:
CxS = m^2 0,182

Moulded colours:
Black *White*

Painted colours:
Antique green *Antique bronze*

Diffuser PMMA:
Clear *Opal*

E27-E40



Lantern supplied with **E27** or **E40 lampholder**. Metal plate for ballast fixation available as an option (H.BAL.PLT)

suitable lamps: CFL-LED SON-HQI max 100W	**E27** Lampholder only	.E27
	E40 Lampholder only	.E40

CHROME ALUMINIUM LOUVRE

H.FC6 open
Downward position



** ADD THESE SUFFIXES TO THE REFERENCES MENTIONED IN THE CATALOGUE*

PHOTOMETRIC DATA SAMPLE

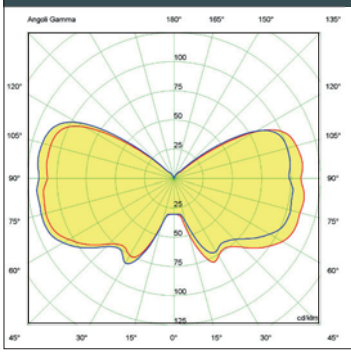

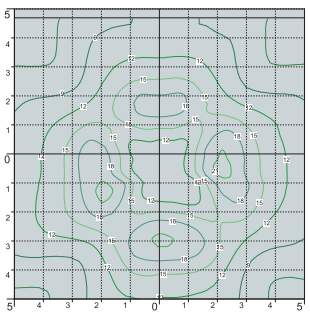

PIETRO *lantern clear SON 100W.*

POST height 4,5mt
10 x 10mt area: average 12 lux

The photometric data for all the versions are available upon request or on our website.

PIETRO GX53 LED - FLAT DIFFUSER

GRAND SIZE

Square lantern in classic style, made of shockproof resin material, UV-rays stabilized, rust and corrosion- free. Modular construction suitable for post top, hanging and wall installation. Supplied as standard with **FLAT diffuser** and equipped with long-life, powerful and efficient TÜV approved GX53 LED modular system in different wattages. Designed according to the international regulations against light pollution (standard UNI 10819). Insulation class II, Protection rating IP 65.

*Lanterna quadra in stile classico, realizzata in resina antiurto, stabilizzata ai raggi UV, inattaccabile da ruggine e corrosione. Idonea per il montaggio a palo, a sospensione o a parete. Fornita con **diffusore piatto** ed equipaggiata con sistema modulare a LED GX53 approvato TÜV di lunga durata ed alta efficienza disponibile in diverse potenze. Progettato in ottemperanza alle norme internazionali contro l'inquinamento luminoso (standard UNI 10819). Classe di isolamento II, grado di protezione IP65.*

U45.000.D8L

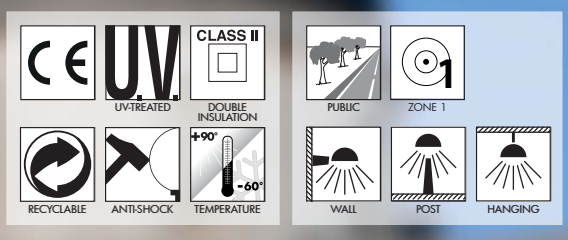

MADE IN ITALY

PIETRO GX53 LED - FLAT DIFFUSER

GRAND SIZE

PIETRO GX53 LED - LANTERN COMPONENTS

IP65



Decorative **PINNACLE** to be mounted on the roof top for post installation or on the lantern base for hanging installation.

PINNACOLO *decorativo applicabile alla sommità del tetto (montaggio a palo) o sulla base della gabbia (montaggio a sospensione).*

LANTERN ROOF made of shockproof resin material, UV-rays stabilized. Tool-free opening for relamping and maintenance.

TETTO *realizzato in resina antiurto, stabilizzata ai raggi UV. Removibile senza l'ausilio di attrezzi per manutenzione e cambio lampadina.*

DIFFUSER with FLAT shape made of UV-rays stabilized polymethylmethacrylate (PMMA), provided with silicone rubber gasket to ensure an increased protection against external agent.

DIFFUSORE *in polimetilmetacrilato (PMMA) con configurazione piatta, provvisto di guarnizione in gomma siliconica per garantire una migliore protezione contro gli agenti esterni.*

CAGE made of shockproof resin material, UV-rays stabilized, rust and corrosion-free.

GABBIA *realizzata in resina antiurto, stabilizzata ai raggi UV, inattaccabile da ruggine e corrosione.*

PIETRO GX53 LED

U45.000 *



Dimensions and weight
Height: 770 mm
Width: 430 mm
Depth: 430 mm
Weight: 9,1 Kg
Junction to support: diameter 60 mm
Area exposed to wind pressure:
CxS = m^2 0,182

Moulded colours:
Black White

Painted colours:
Antique green Antique bronze

Diffuser PMMA:
Clear Opal

GX53 LED



- **COST SAVING:** long-life and efficient LED light sources.
- **BUILT-IN DRIVER:** quick and easy lamp replacement
- **GREAT FLEXIBILITY:** GX53 standard lamp holder.
- **FUTURE-PROOFED LUMINARIES:** performances easy to upgrade to latest technology developments.
- **SUITABLE FOR OUTDOOR USE:** built-in driver fully protected against heat and humidity by silicone paste.

Lantern supplied with white resin CEILING provided with TÜV approved, long-life and efficient **8xGX53 LED lamps included**. Each lamp can be quickly and easily replaced individually, making the luminaries maintenance very simple.

				*ADD. SUFFIX
GX53 LED	8x 7 W **56 W**	**6400 Lm**	4000 K	.C8L
			3000 K	.C8R
	8x 10 W **80 W**	**9600 Lm**	4000 K	.D8L
			3000 K	.D8R

LED LAMPS

More technical details about TÜV approved Fumagalli LED Lamps on page 512.

** ADD THESE SUFFIXES TO THE REFERENCES MENTIONED IN THE CATALOGUE*

PHOTOMETRIC DATA SAMPLE

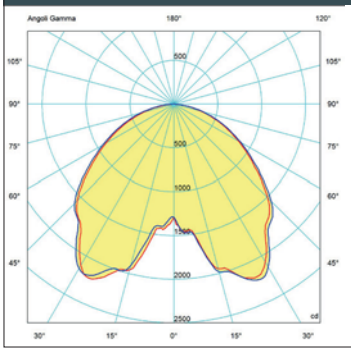

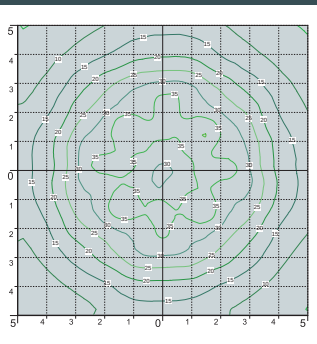

SAVE **-66%**

8x7W GX53 LED 56W *(power consumption)*

Area: 10x10mt
Height: 4,5mt
28 lux

=

SON 150W 165W *(power consumption)*

Area: 10x10mt
Height: 4,5mt
17 lux

PIETRO

GRAND SIZE





MADE IN ITALY

GIONA 5000/PIETRO

U43.227

GX53 U45.227

Pcs 1
Kg 67,5
mc 1,112

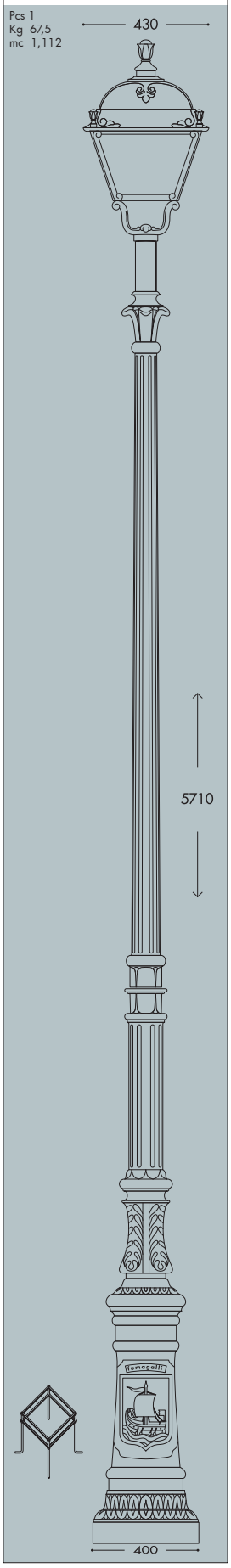

GIONA 4000/PIETRO	GIONA 4500/PIETRO
U43.221	U43.224
GX53 U45.221	U45.224
Pcs 1 Kg 62,5 mc 0,862	Pcs 1 Kg 65,5 mc 0,982

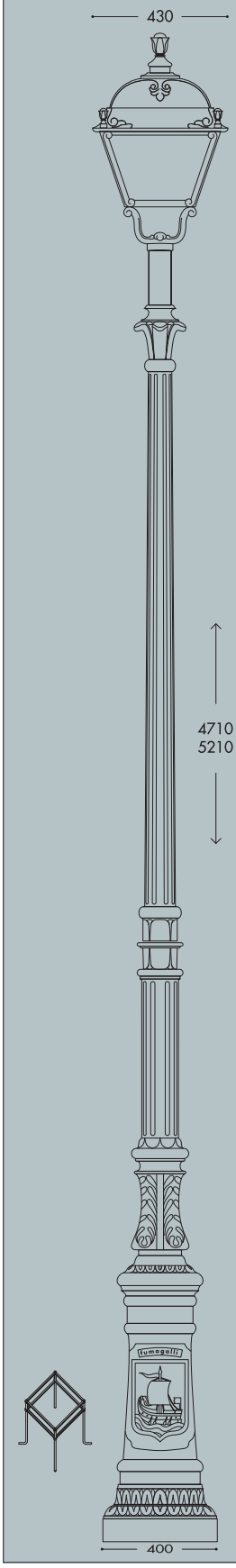

KARMEL 3500/PIETRO	KARMEL 4000/PIETRO
U43.234	U43.237
GX53 U45.234	U45.237
Pcs 1 Kg 38,6 mc 0,402	Pcs 1 Kg 42 mc 0,453

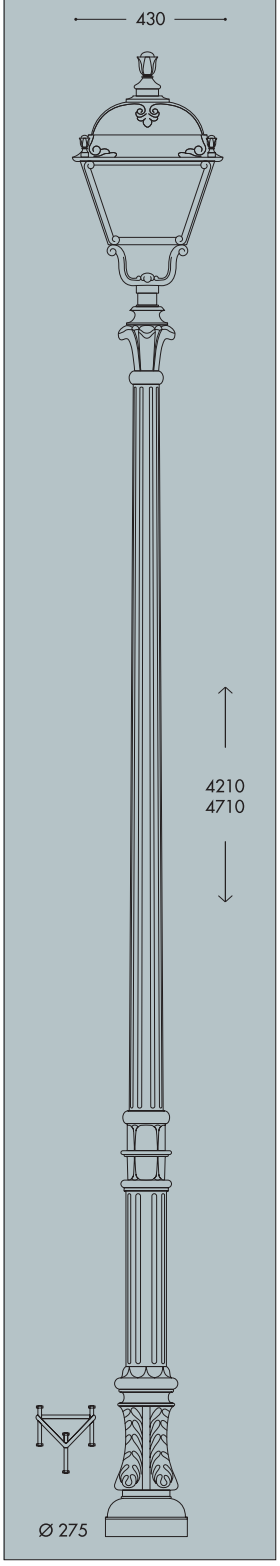

LOT/PIETRO

U43.113

GX53 U45.113

Pcs 1
Kg 8,4
mc 0,182

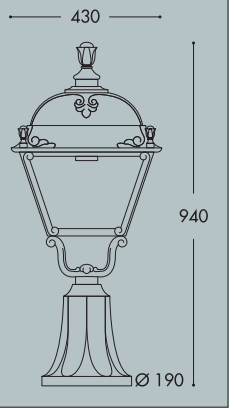

KARMEL 3000/PIETRO

U43.231

GX53 U45.231

Pcs 1
Kg 33
mc 0,362

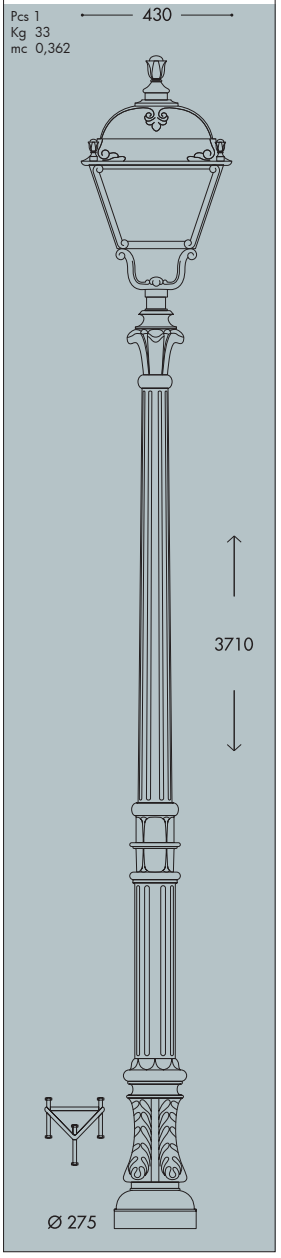

PIETRO

U43.000

GX53 U45.000

Pcs 1
Kg 7,5
mc 0,182

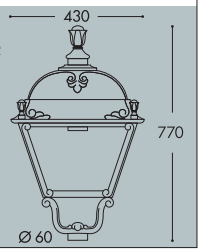

TABOR/ PIETRO	HOREB/ PIETRO
U43.204	U43.207
GX53 U45.204	U45.207

Pcs 1
Kg 33
mc 0,362

Pcs 1
Kg 35,5
mc 0,402

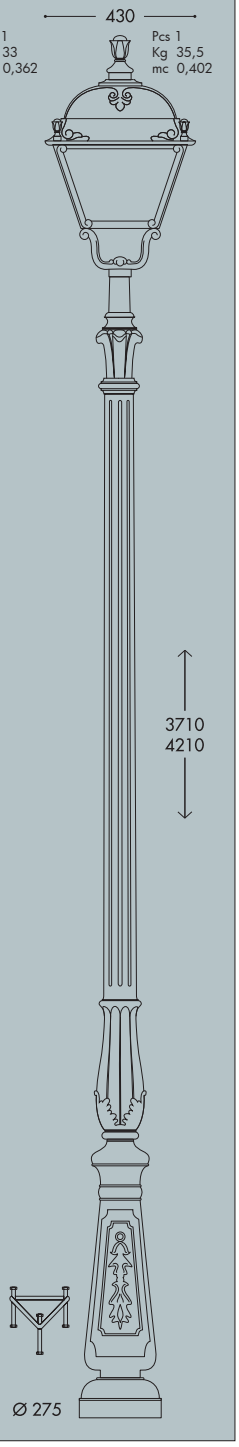

GIONA 4000/PIETRO

GRAND SIZE







MADE IN ITALY

ADAM/PIETRO

U43.171

GX53 U45.171

Pcs 1
Kg 9
mc 0,190

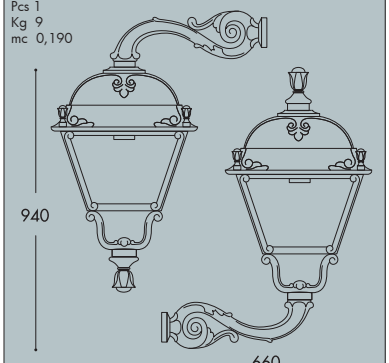

GIONA 4000 ADAM/PIETRO 1L

U43.221.M10

GX53 U45.221.M10

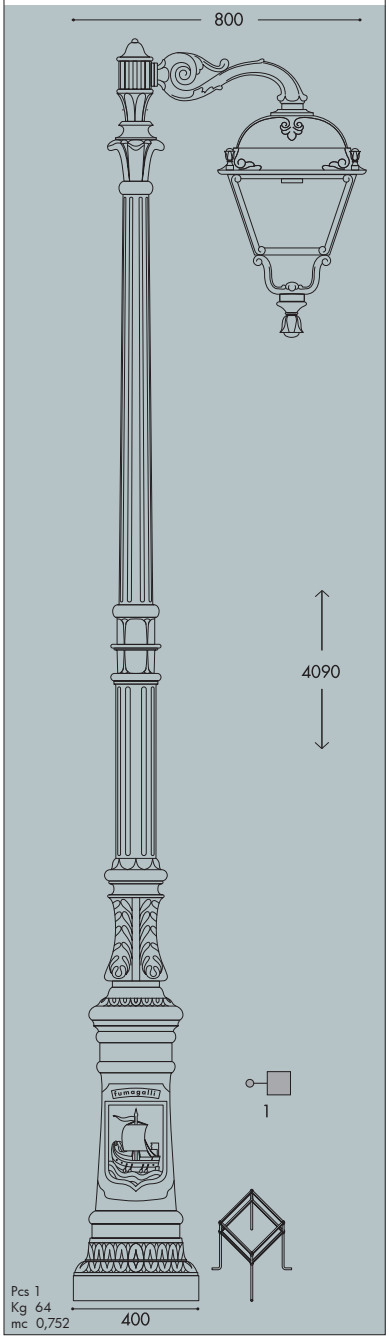

Pcs 1
Kg 64
mc 0,752

GIONA 4000 ADAM/PIETRO 3L

U43.221.M30

GX53 U45.221.M30

Pcs 1
Kg 82
mc 1,100

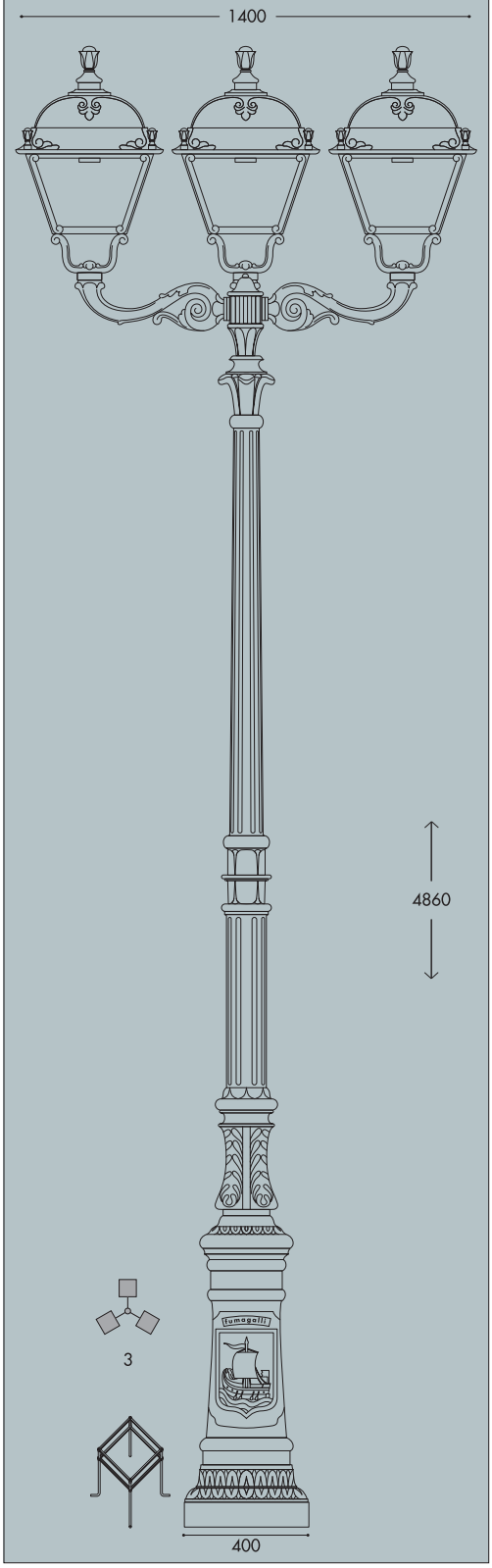

SICHEM/PIETRO

U43.121

GX53 U45.121

Pcs 1
Kg 8
mc 0,182

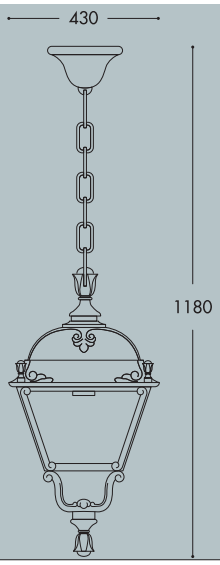

GIONA 4000 ADAM/PIETRO 2+1

U43.221.M21

GX53 U45.221.M21

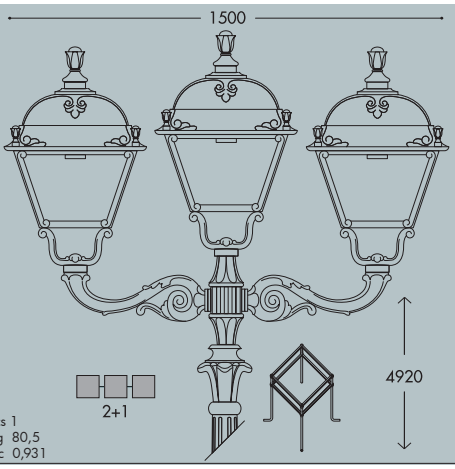

Pcs 1
Kg 80,5
mc 0,931

GIONA 4000 ADAM/PIETRO 2L

U43.221.M20

GX53 U45.221.M20

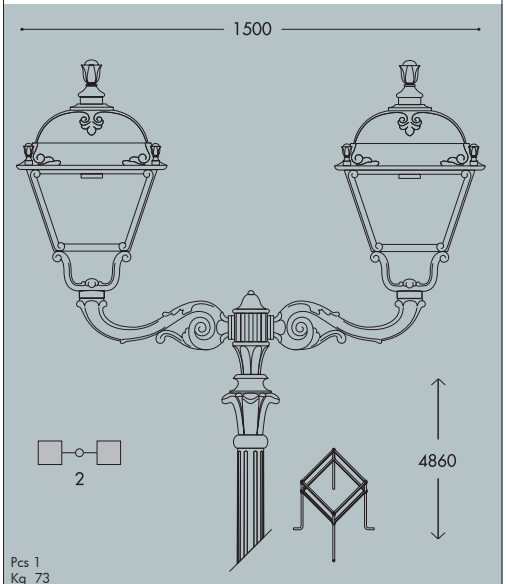

Pcs 1
Kg 73
mc 0,863

GIONA 4500-5000/PIETRO

GRAND SIZE







MADE IN ITALY

GIONA 4500 ARON/ PIETRO 1L		GIONA 5000 ARON/ PIETRO 1L
E27	U43.224.N10	U43.227.N10
GX53	U45.224.N10	U45.227.N10

Pcs 1 Kg 71,5 mc 0,949 — Pcs 1 Kg 73,5 mc 1,191

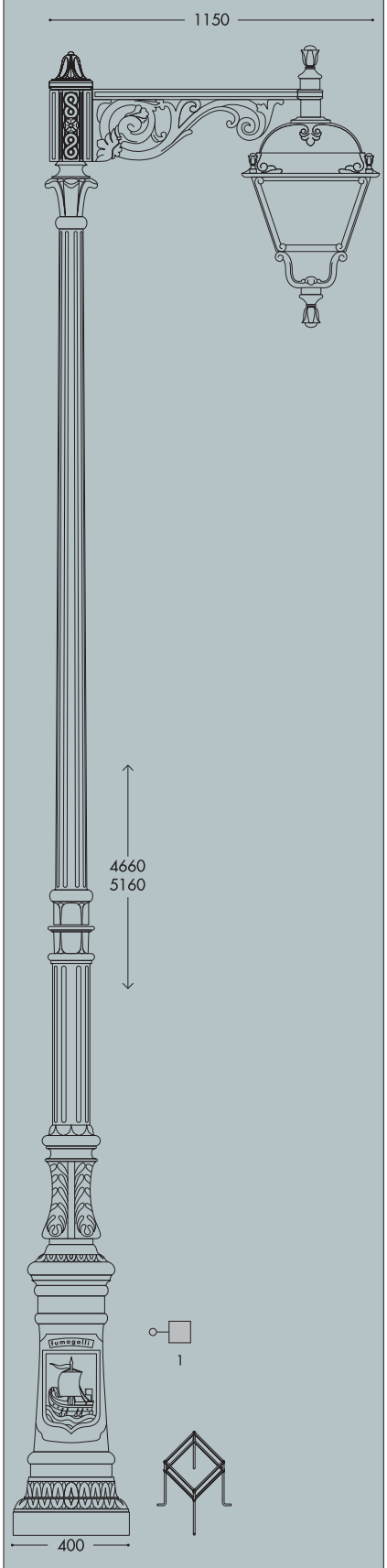

ARON/PIETRO	
E27	U43.172
GX53	U45.172

Pcs 1 Kg 13 mc 0,223

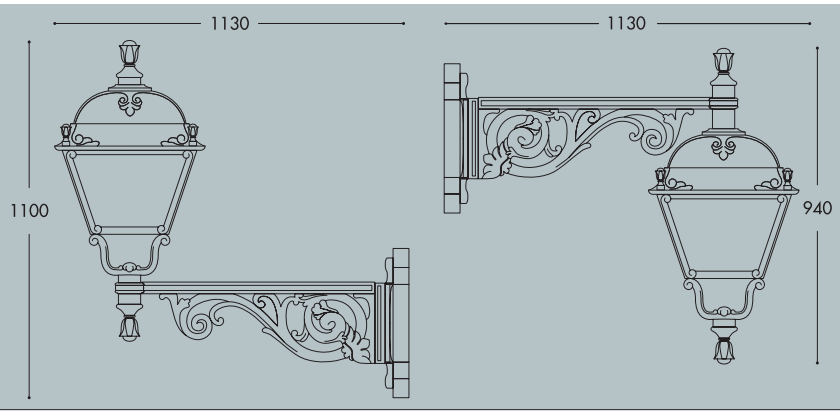

GIONA 4500 ARON/PIETRO 2L		GIONA 5000 ARON/PIETRO 2L	
E27	U43.224.N20	**E27**	U43.227.N20
GX53	U45.224.N20	**GX53**	U45.227.N20

Pcs 1 Kg 82,5 mc 1,196 — Pcs 1 Kg 84,5 mc 1,329

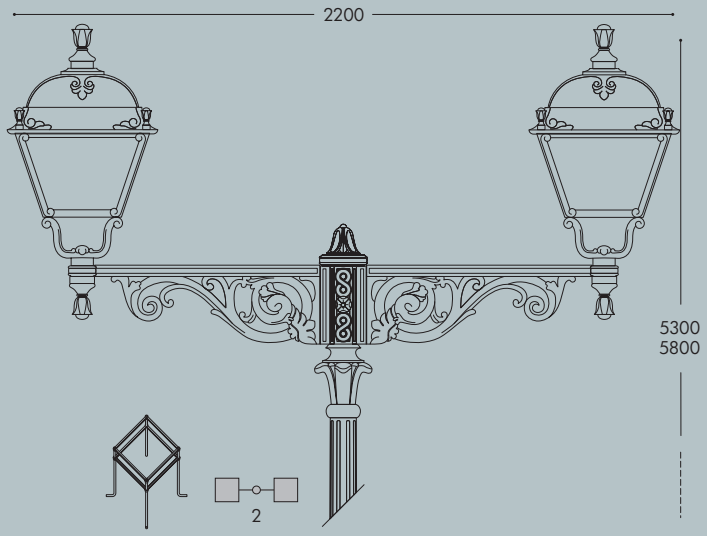

GIONA 4500 ARON/PIETRO 4L		GIONA 5000 ARON/PIETRO 4L	
E27	U43.224.N40	**E27**	U43.227.N40
GX53	U45.224.N40	**GX53**	U45.227.N40

Pcs 1 Kg 105 mc 1,444 — Pcs 1 Kg 107 mc 1,605

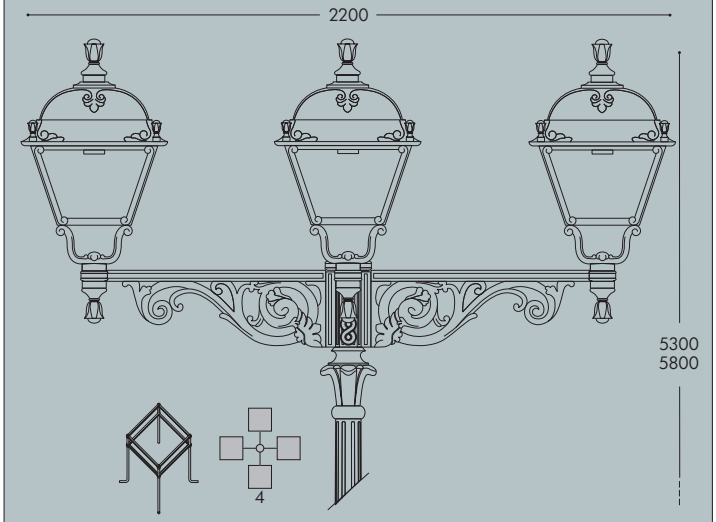

ERMON.R/PIETRO	
E27	U43.195 resin
GX53	U45.195 resin

Pcs 1 Kg 13,5 mc 0,250

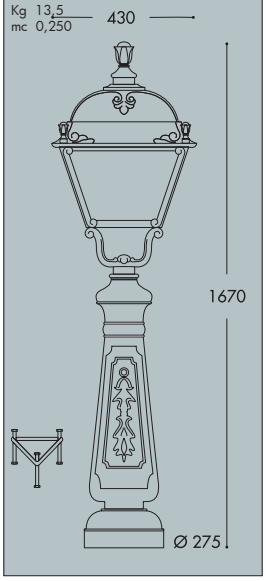

GLOBE 400 CLASSIC

LARGE SIZE

Ø 400 mm PMMA globe, complete with classic base made of shockproof resin material, UV-rays stabilized, rust and corrosion-free. Suitable for post top, hanging and wall installation. Base provided with E27 lampholder and prepared for louvre fixation. Insulation class II, protection rating IP65.

Globo Ø 400 mm in polimetilmetacrilato (PMMA) completo di base classica realizzata in resina antiurto, stabilizzata ai raggi UV, inattaccabile da ruggine e corrosione. Idoneo per il montaggio a palo, a sospensione o a parete. Base fornit con portalampada E27 e predisposto per il fissaggio del frangiluce. Classe di isolamento II, grado di protezione IP65.

G40.B40.E27FC1



CE · UV-TREATED · CLASS II DOUBLE INSULATION · RECYCLABLE · ANTI-SHOCK · +90° -60° TEMPERATURE

PUBLIC · WALL · POST · HANGING

MADE IN ITALY

GLOBE 400 CLASSIC - COMPONENTS

IP65

ELECTRICAL EQUIPMENT SEAT



400 mm GLOBE made of UV-rays stabilized polymethylmethacrylate (PMMA), one piece only.
Available in clear, opal or smoked colour.

GLOBO Ø 400 mm *in polimetilmetacrilato (PMMA), resistente all'ingiallimento ed ai raggi UV, realizzato in un unico pezzo. Disponibile nei colori trasparente, bianco o fumé.*

Clear (X) | Opal (Y) | Smoked (Z)

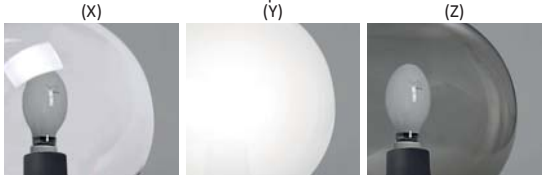

Chrome aluminium **LOUVRE** with a laminar symmetrical optic system to direct the lighting output and to get a lower dazzle (optional).

FRANGILUCE *in alluminio cromato con sistema ottico lamellare a ripartizione simmetrica per orientare il fascio di luce e ridurre l'abbagliamento (opzionale).*

Globe **BASE**, made of shockproof resin material, UV-rays stabilized, rust and corrosion-free, consisting of a support and of a cover provided with E27 lampholder.
A rubber gasket assures the protection of the electrical accessories seat against external agents.

BASE *del globo, realizzata in resina antiurto, stabilizzata ai raggi UV, inattaccabile da ruggine e corrosione. Composta da un supporto e da un coperchio in cui si trova l'alloggiamento per il portalampada E27 (incluso). Una guarnizione in gomma garantisce la protezione dell'alloggiamento degli accessori elettrici dagli agenti esterni.*

GLOBE 400 CLASSIC

G40.B40 *



Dimensions and weight
Height: 410 mm
Diameter: 400 mm
Junction to support: diameter 60 mm
Weight: 2,3 Kg
Area exposed to wind pressure:
CxS = m² 0,122

Moulded colours:
Black *White*

Painted colours:
Antique green *Antique bronze*

Diffuser PMMA:
Clear *Opal* *Smoked*

CHROME ALUMINIUM LOUVRE

H.FC1 closed
Upward position



H.FC6 open
Downward position



** ADD THE ABOVE SUFFIXES TO THE REFERENCES MENTIONED IN THE CATALOGUE*

E27



		*ADD. SUFFIX
suitable lamps: CFL-LED SON-HQI max 70W	**E27** Lampholder only	.E27

Globe complete with classic base and **E27** lampholder. Metal plate for ballast fixation available as an option (H.BAL.PLT)

PHOTOMETRIC DATA SAMPLE

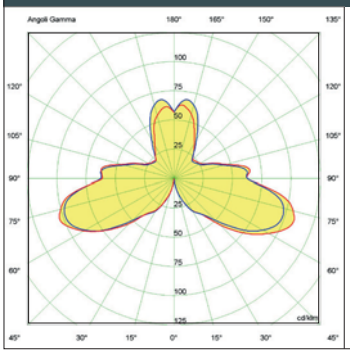

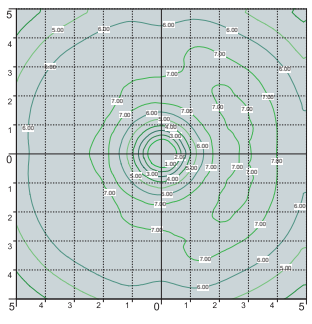

GLOBE 400 CLASSIC *clear SON 70W (with louvre).*

POST height 3,5mt
10 x 10mt area: average 6 lux

The photometric data for all the versions are available upon request or on our website.

TABOR/GLOBE 400 CLASSIC

LARGE SIZE

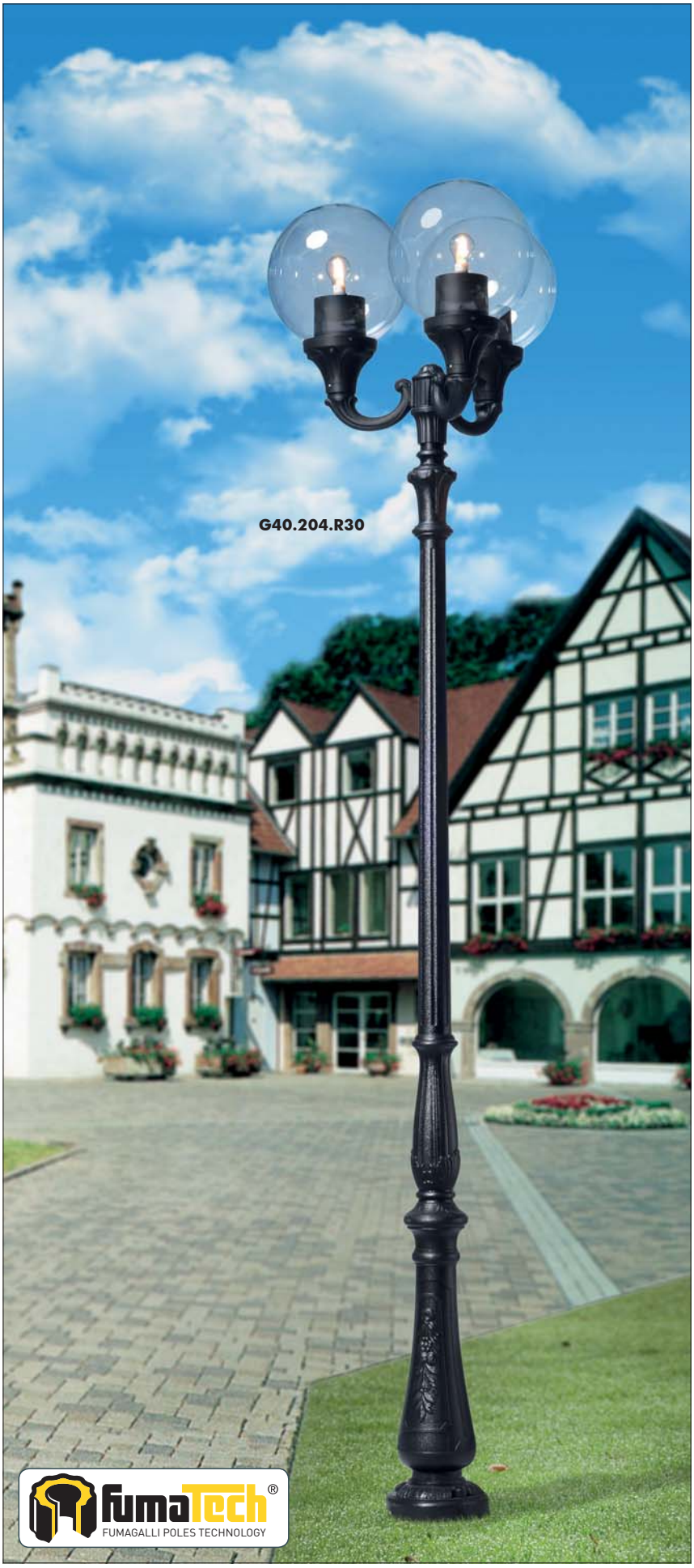





MADE IN ITALY

OFIR/G400

G40.132

Pcs 2
Kg 6,1
mc 0,133

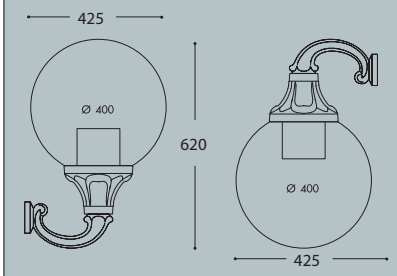

ADAM/G400

G40.171

Pcs 2
Kg 7,5
mc 0,192

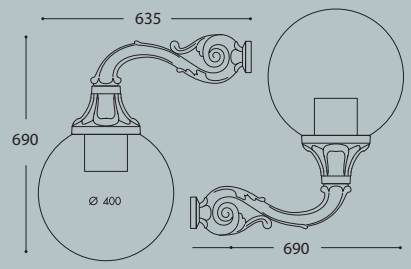

GLOBE 400 CLASSIC

G40.B40

Pcs 2
Kg 4,7
mc 0,133

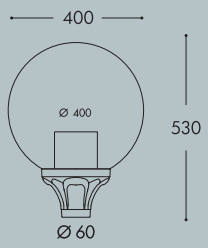

TABOR/G400

G40.204

Pcs 1
Kg 27,9
mc 0,230

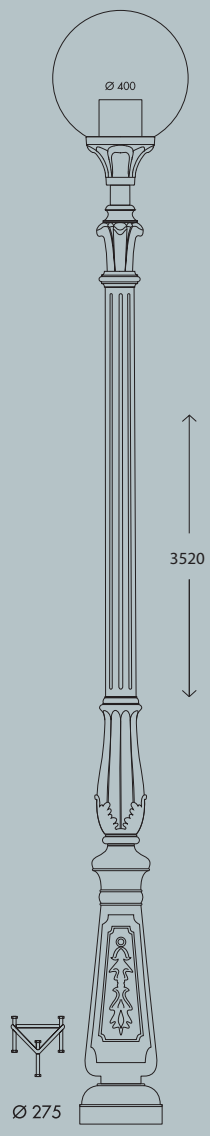

TABOR OFIR/G400 2L

G40.204.R20

Pcs 1
Kg 33,2
mc 0,347

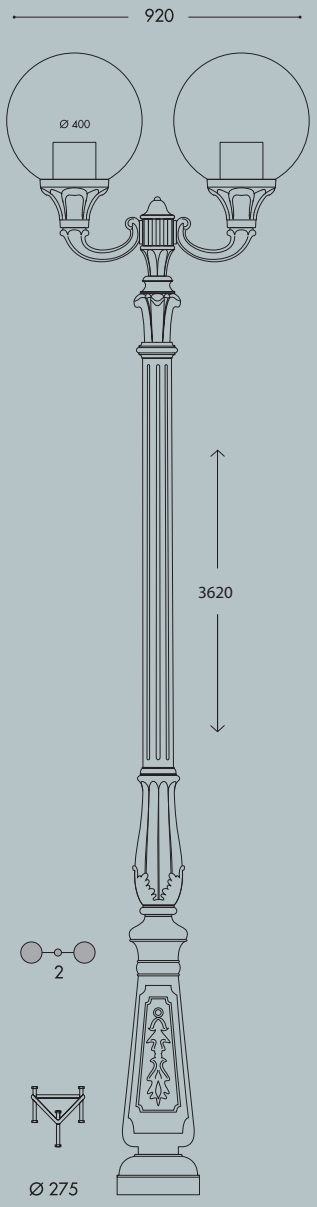

TABOR OFIR/G400 3L

G40.204.R30

Pcs 1
Kg 36
mc 0,429

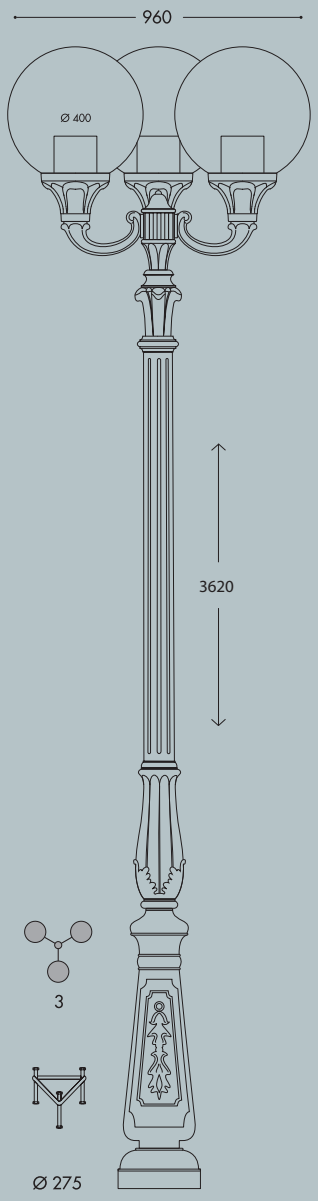

HOREB/GLOBE 400 CLASSIC

LARGE SIZE







MADE IN ITALY

HOREB ADAM/G400 1L

G40.207.M10

Pcs 1
Kg 32,2
mc 0,310

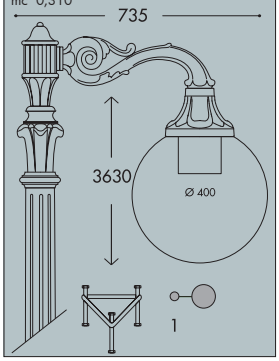

LOT/G400

G40.113

Pcs 2
Kg 6,5
mc 0,152

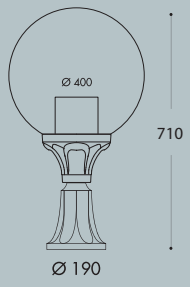

SICHEM/G400

G40.121

Pcs 2
Kg 5,3
mc 0,133

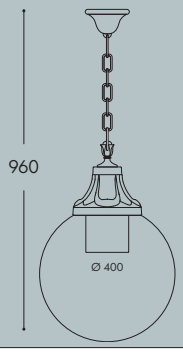

HOREB ADAM/G400 2L

G40.207.M20

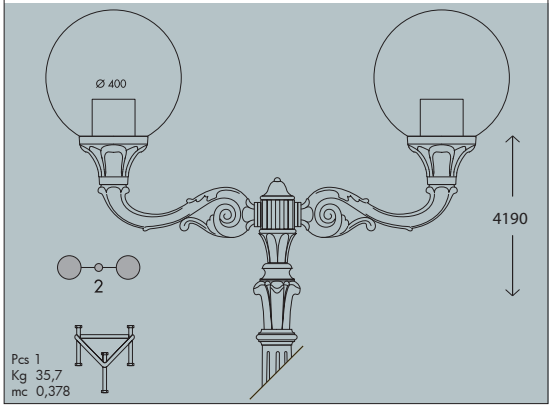

HOREB/G400

G40.207

Pcs 1
Kg 30,3
mc 0,256

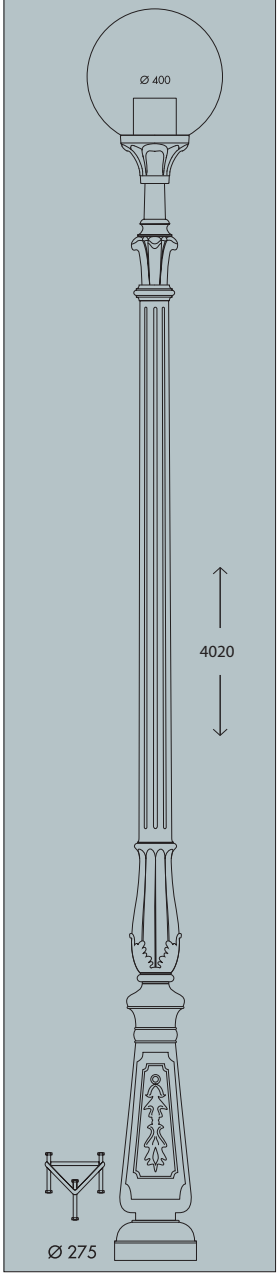

HOREB ADAM/G400 3+1

G40.207.M31

Pcs 1
Kg 41,6
mc 0,545

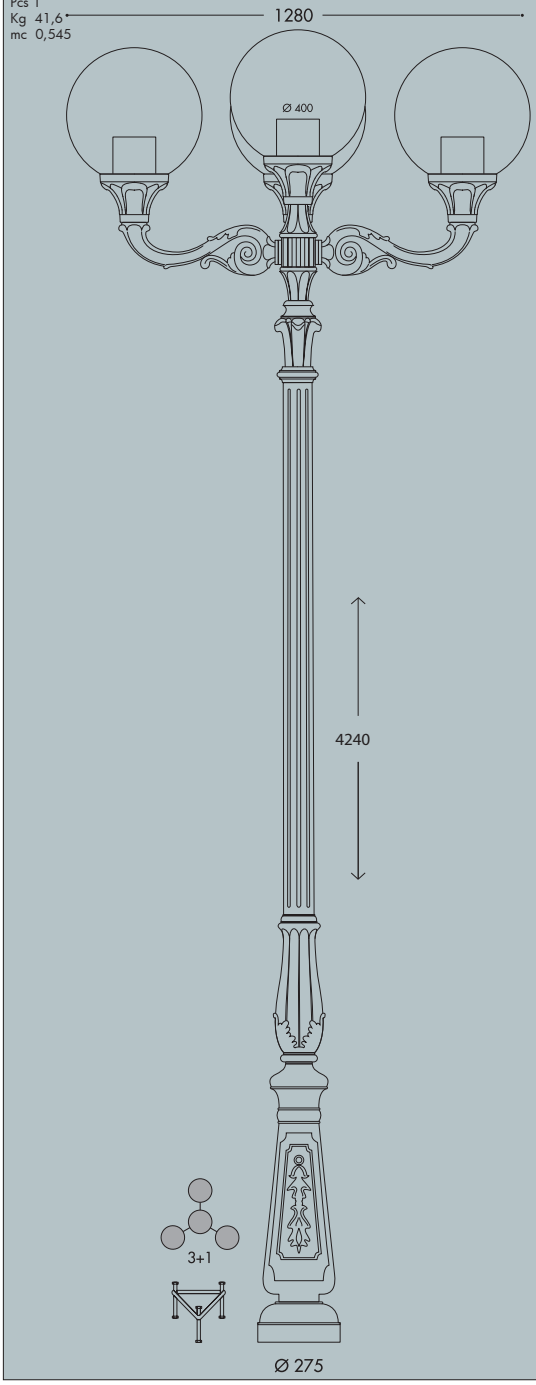

HOREB ADAM/G400 2+1

G40.207.M21

Pcs 1
Kg 38
mc 0,447

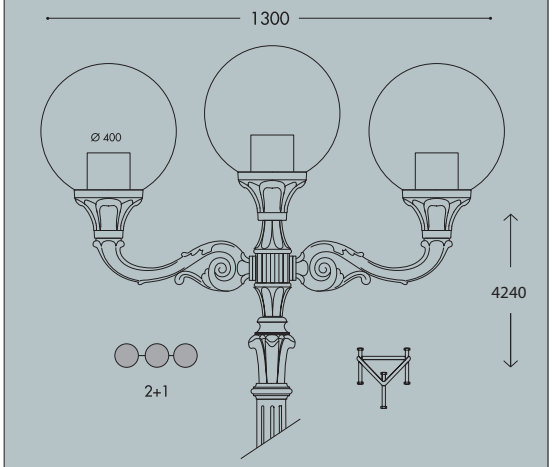

HOREB ADAM/G400 3L

G40.207.M30

Pcs 1
Kg 39,4
mc 0,477

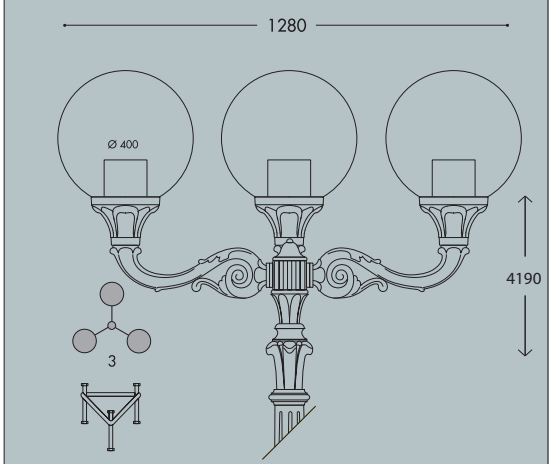

KARMEL 3000/GLOBE 400 CLASSIC

LARGE SIZE







MADE IN ITALY

KARMEL 3000/G400

G40.231

Pcs 1
Kg 27,9
mc 0,230

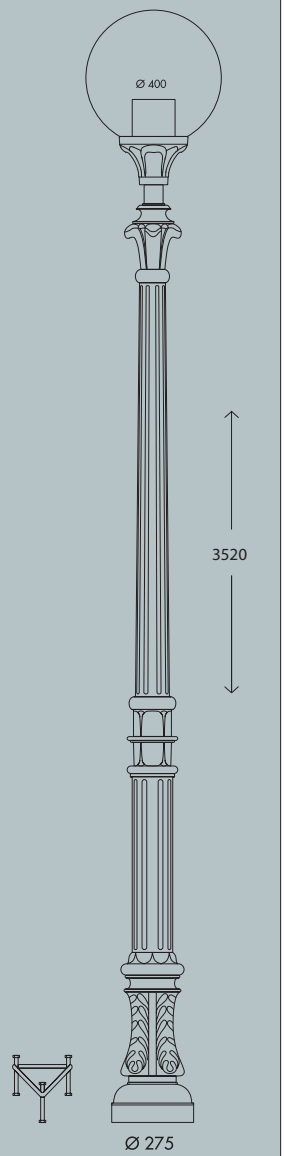

KARMEL 3000 OFIR/G400 2L

G40.231.R20

Pcs 1
Kg 33,2
mc 0,347

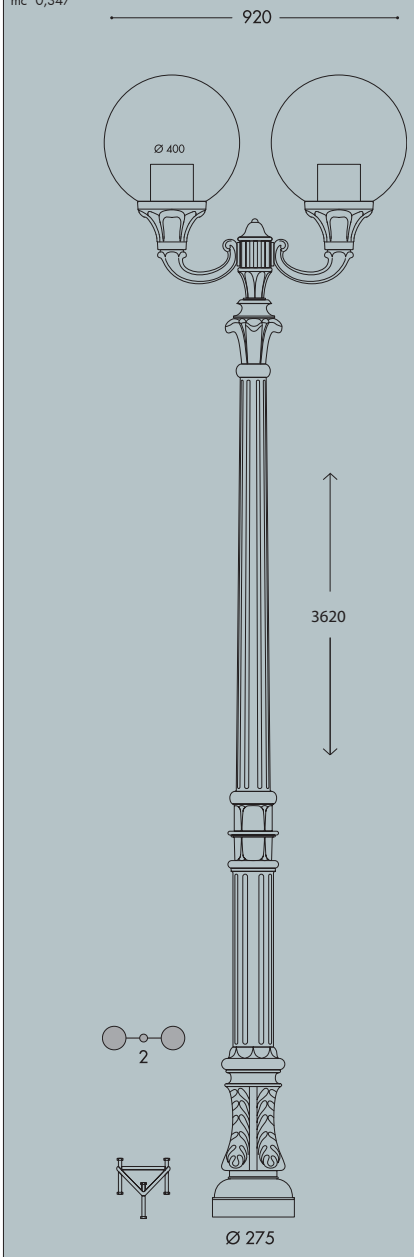

KARMEL 3000 OFIR/G400 3L

G40.231.R30

Pcs 1
Kg 36
mc 0,429

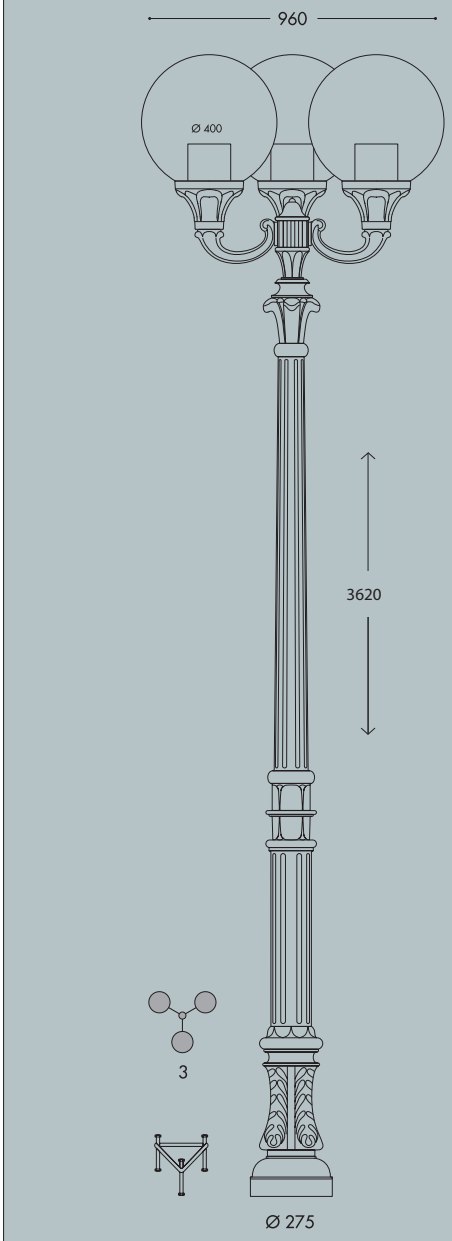

KARMEL 3500-4000/GLOBE 400 CLASSIC

LARGE SIZE







MADE IN ITALY

KARMEL 3500-4000/GLOBE 400

LARGE SIZE

KARMEL 3500 ADAM/G400 1L	KARMEL 4000 ADAM/G400 1L
G40.234.M10	G40.237.M10

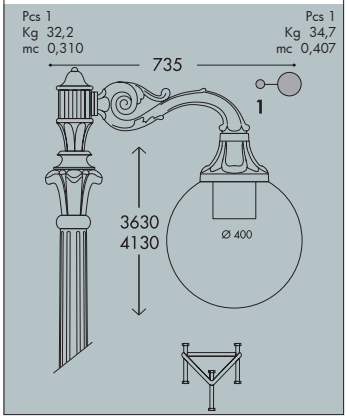

KARMEL 3500/G400	KARMEL 4000/G400
G40.234	G40.237

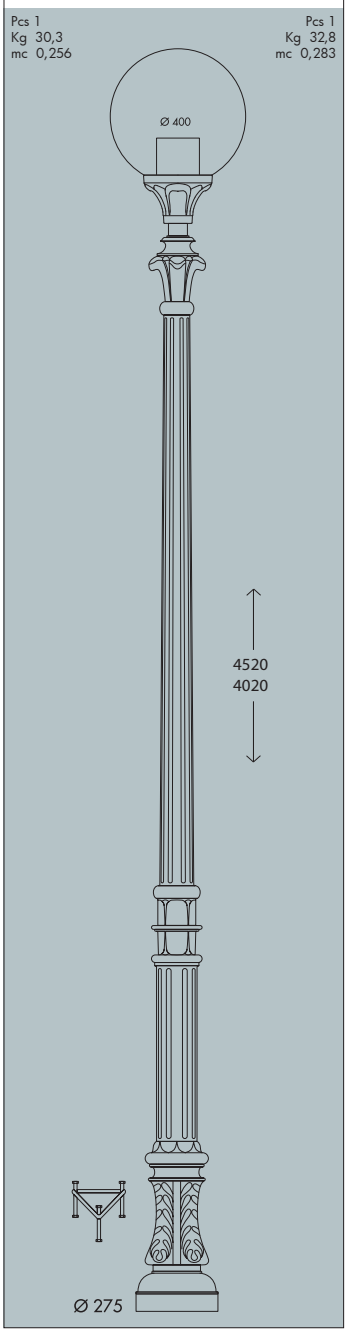

EVA/G400 2L
G40.181

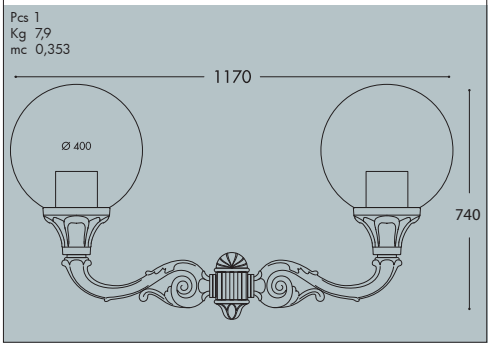

KARMEL 3500 ADAM/G400 2+1	KARMEL 4000 ADAM/G400 2+1
G40.234.M21	G40.237.M21

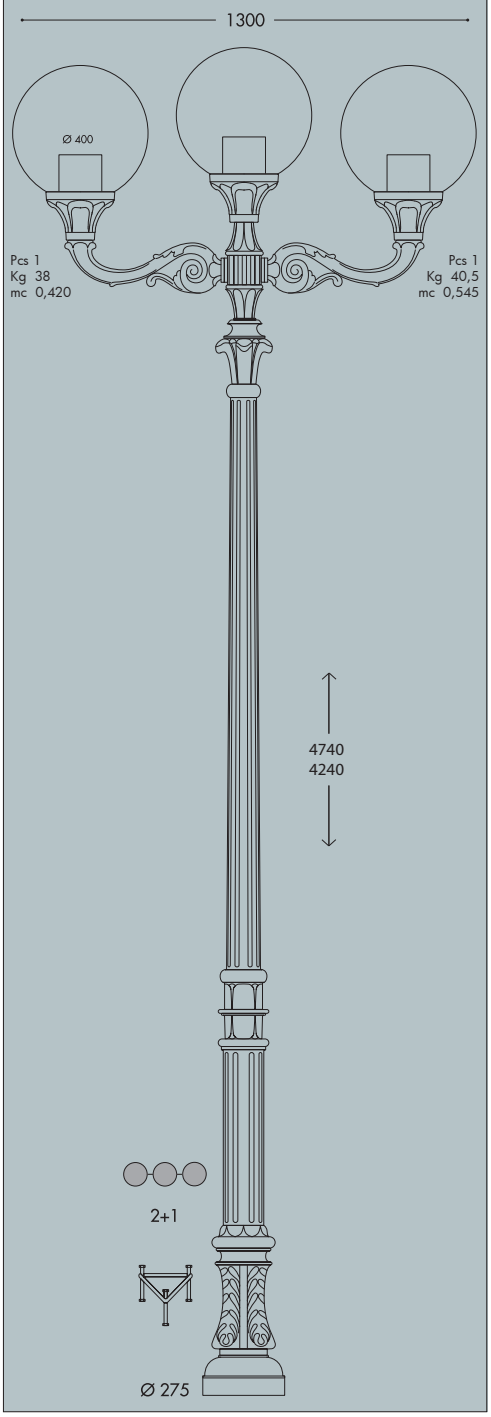

KARMEL 3500 ADAM/G400 3L	KARMEL 4000 ADAM/G400 3L
G40.234.M30	G40.237.M30

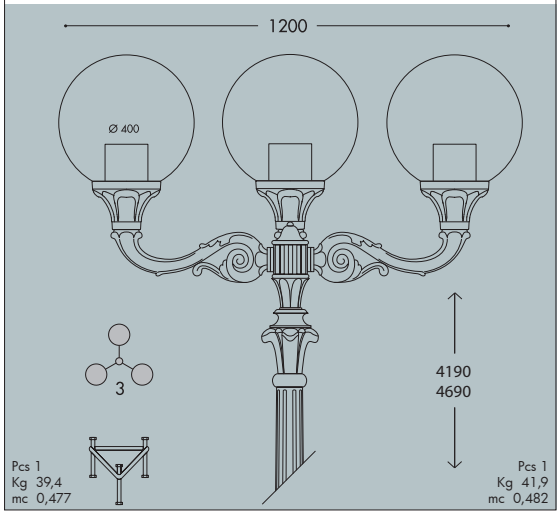

KARMEL 3500 ADAM/G400 3+1	KARMEL 4000 ADAM/G400 3+1
G40.234.M31	G40.237.M31

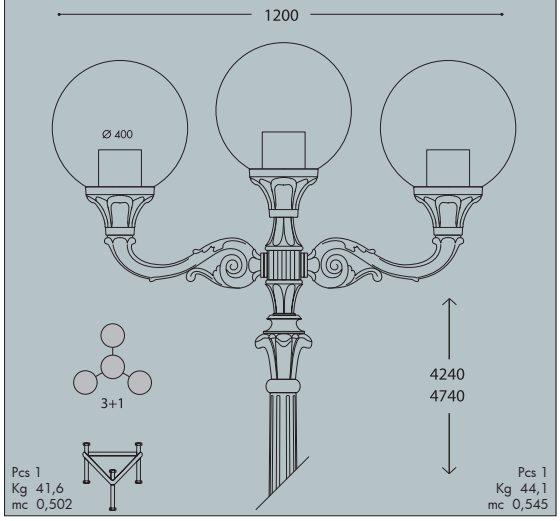

KARMEL 3500 ADAM/G400 2L	KARMEL 4000 ADAM/G400 2L
G40.234.M20	G40.237.M20

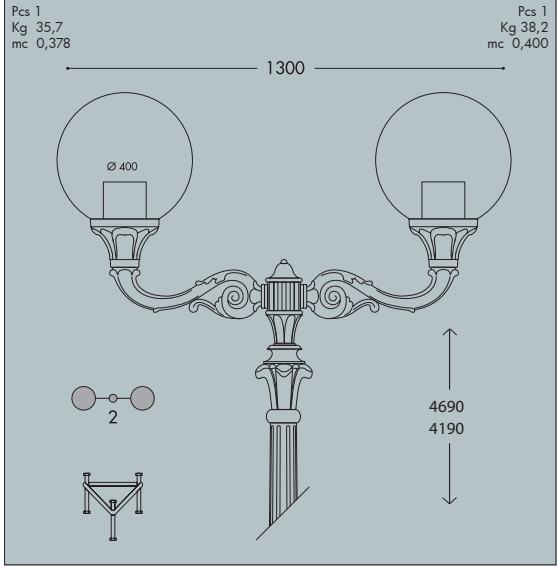

GIONA 4000/GLOBE 400 CLASSIC

LARGE SIZE





MADE IN ITALY

GIONA 4000 ADAM/G400 1L

G40.221.M10

Pcs 1
Kg 59,2
mc 0,897

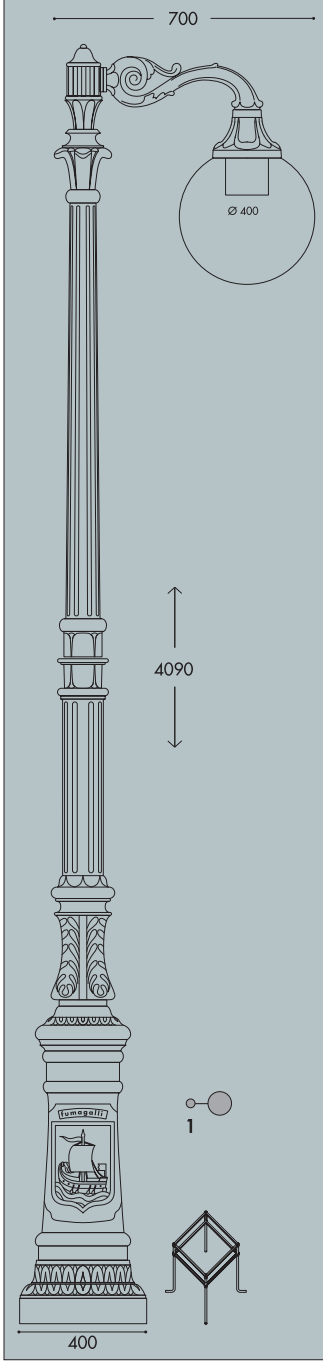

GIONA 4000 ADAM/G400 3+1

G40.221.M31

Pcs 1
Kg 69,1
mc 1,32

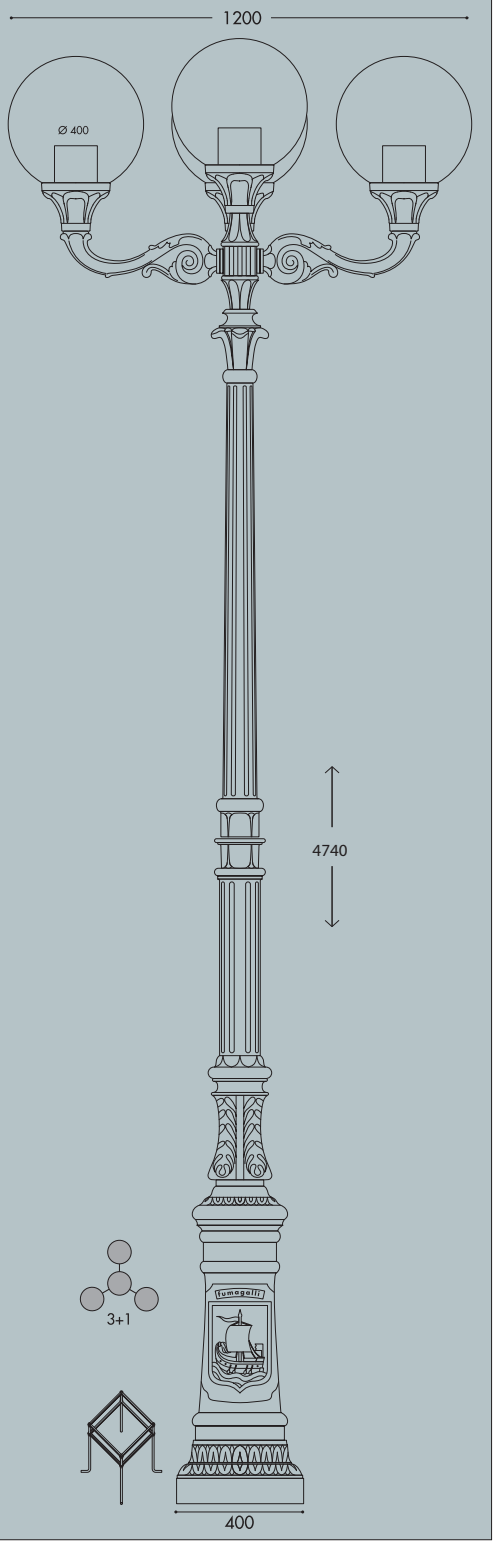

GIONA 4000 ADAM/G400 2L

G40.221.M20

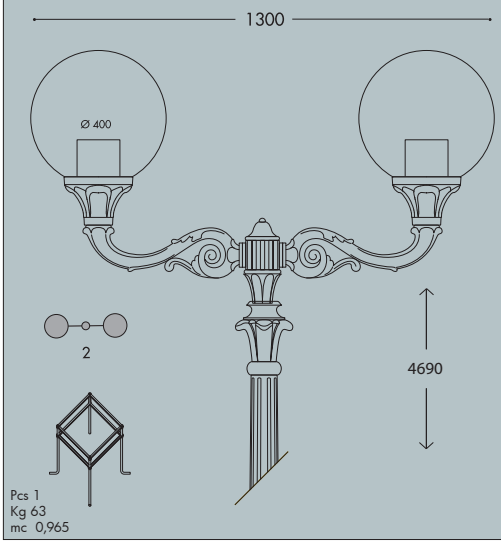

Pcs 1
Kg 63
mc 0,965

GIONA 4000 ADAM/G400 2+1

G40.221.M21

Pcs 1
Kg 65,3
mc 1,034

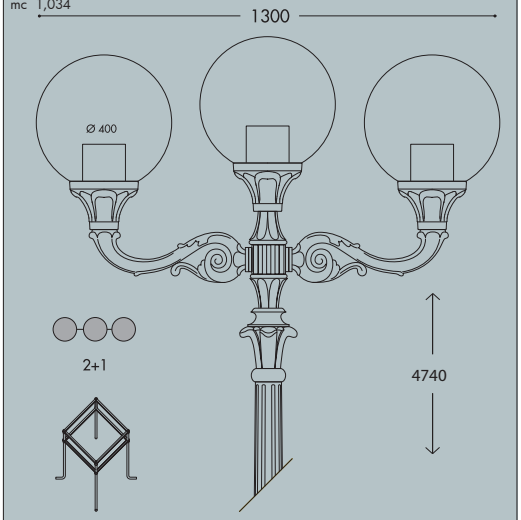

GIONA 4000 ADAM/G400 3L

G40.221.M30

Pcs 1
Kg 66,7
mc 1,064

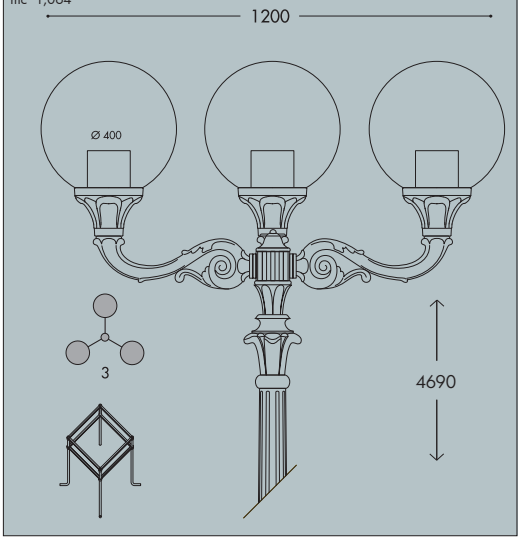

GLOBE 500 CLASSIC

GRAND SIZE

Ø 500 mm PMMA globe, complete with classic base made of shockproof resin material, UV-rays stabilized, rust and corrosion-free. Suitable for post top, hanging and wall installation. Base provided with E27 lampholder and prepared for louvre fixation. Insulation class II, protection rating IP65.

Globo Ø 500 mm in polimetilmetacrilato (PMMA) completo di base classica realizzata in resina antiurto, stabilizzata ai raggi UV, inattaccabile da ruggine e corrosione. Idoneo per il montaggio a palo, a sospensione o a parete. Base fornita con portalampada E27 e predisposto per il fissaggio del frangiluce. Classe di isolamento II, grado di protezione IP65.

G50.B50.E27FC1

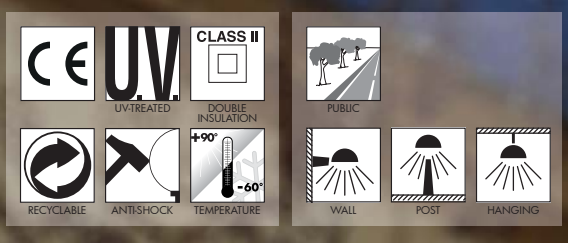

MADE IN ITALY

GLOBE 500 CLASSIC - COMPONENTS

IP65
ELECTRICAL EQUIPMENT SEAT



500 mm GLOBE made of UV-rays stabilized polymethylmethacrylate (PMMA), one piece only. Available in clear, opal or smoked colour.

GLOBO Ø 500 mm *Ø 500 mm in polimetilmetacrilato (PMMA), resistente all'ingiallimento ed ai raggi UV, realizzato in un unico pezzo. Disponibile nei colori trasparente, bianco o fumé.*

Clear (X) | Opal (Y) | Smoked (Z)

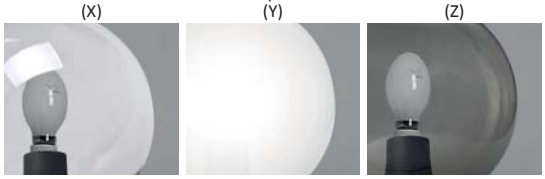



Chrome aluminium **LOUVRE** with a laminar symmetrical optic system to direct the lighting output and to get a lower dazzle (optional).

FRANGILUCE *in alluminio cromato con sistema ottico lamellare a ripartizione simmetrica per orientare il fascio di luce e ridurre l'abbagliamento (opzionale).*





Luminaries **BASE**, made of shockproof resin material, UV-rays stabilized, rust and corrosion-free, consisting of a support and of a cover provided with E27 - E40 lampholder. A rubber gasket assures the protection of the electrical accessories seat from external agents.

BASE *del globo, realizzata in resina antiurto, stabilizzata ai raggi UV, inattaccabile da ruggine e corrosione. Composta da un supporto e da un coperchio in cui si trova l'alloggiamento per il portalampada E27 (incluso). Una guarnizione in gomma garantisce la protezione dell'alloggiamento degli accessori elettrici dagli agenti esterni.*

GLOBE 500 CLASSIC

G50.B50 *



Dimensions and weight
Height: 630 mm
Diameter: 500 mm
Junction to support: diameter 60 mm
Weight: 3,6 Kg
Area exposed to wind pressure:
CxS = m² 0,181

Moulded colours:
Black *White*

Painted colours:
Antique green *Antique bronze*

Diffuser PMMA:
Clear *Opal* *Smoked*

CHROME ALUMINIUM LOUVRE

H.FC1 closed
Upward position



H.FC6 open
Downward position



** ADD THE ABOVE SUFFIXES TO THE REFERENCES MENTIONED IN THE CATALOGUE*

E27-E40



Globe complete with classic base and **E27** or **E40** lampholder. Metal plate for ballast fixation available as an option (H.BAL.PLT)

		*ADD. SUFFIX
suitable lamps: CFL-LED SON-HQI max 100W	**E27** Lampholder only	.E27
	E40 Lampholder only	.E40

PHOTOMETRIC DATA SAMPLE

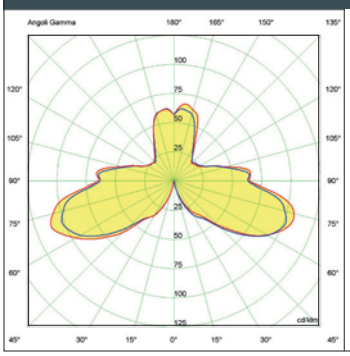

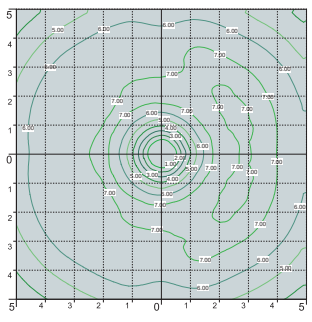

GLOBE 500 CLASSIC *clear SON 70W (with louvre).*

POST height 3,5mt
10 x 10mt area: average 6 lux

The photometric data for all the versions are available upon request or on our website.

GLOBE 500 CLASSIC

GRAND SIZE



GIONA 5000/G500

G50.227

Pcs 1
Kg 63,6
mc 1,157

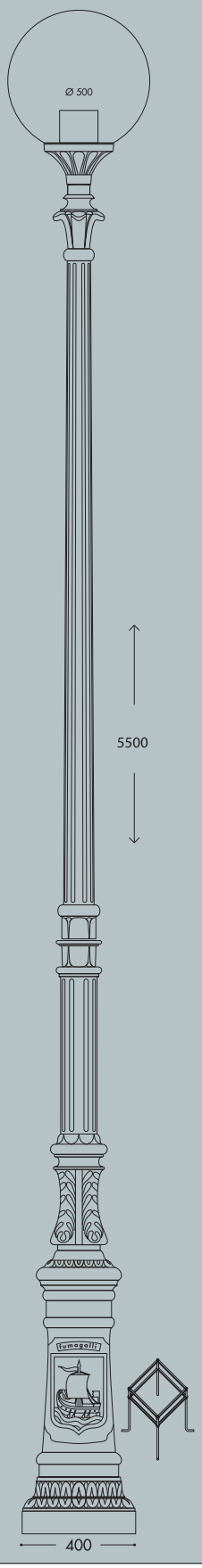

GIONA 4000/G500 | GIONA 4500/G500

G50.221 | G50.224

Pcs 1
Kg 58,6
mc 0,907

Pcs 1
Kg 61,6
mc 1,027

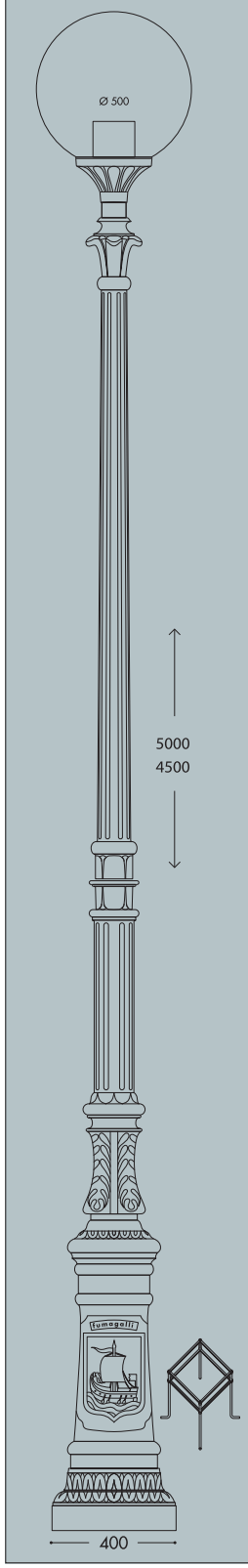

KARMEL 3500/G500 | KARMEL 4000/G500

G50.234 | G50.237

Pcs 1
Kg 31,6
mc 0,447

Pcs 1
Kg 34,1
mc 0,498

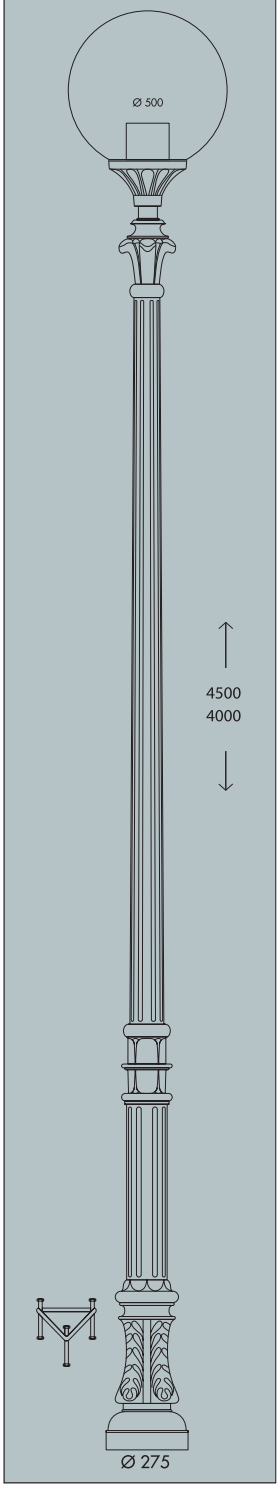

SICHEM/G500

G50.121

Pcs 2
Kg 15,2
mc 0,275

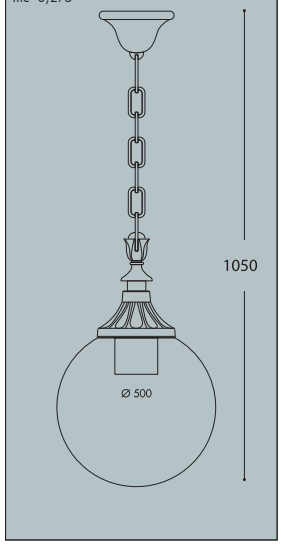

KARMEL 3000/G500

G50.231

Pcs 1
Kg 29,1
mc 0,407

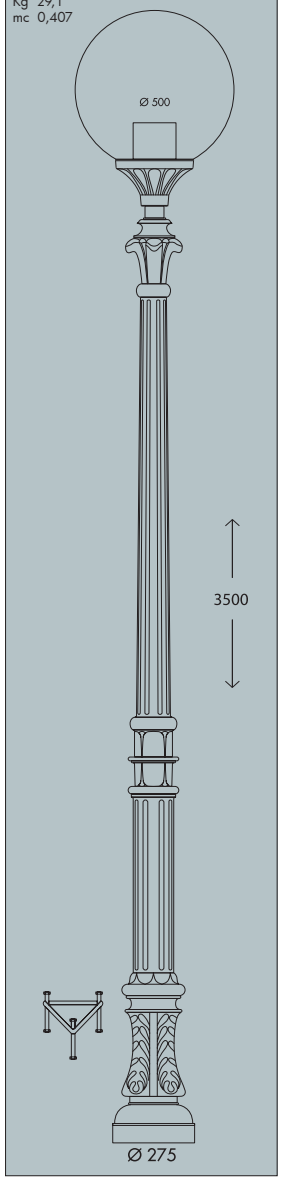

GLOBE 500 CLASSIC

G50.B50

Pcs 2
Kg 7,2
mc 0,275

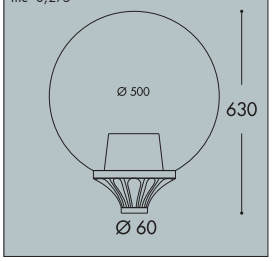

TABOR/G500 | HOREB/G500

G50.204 | G50.207

Pcs 1
Kg 29,1
mc 0,407

Pcs 1
Kg 31,6
mc 0,447

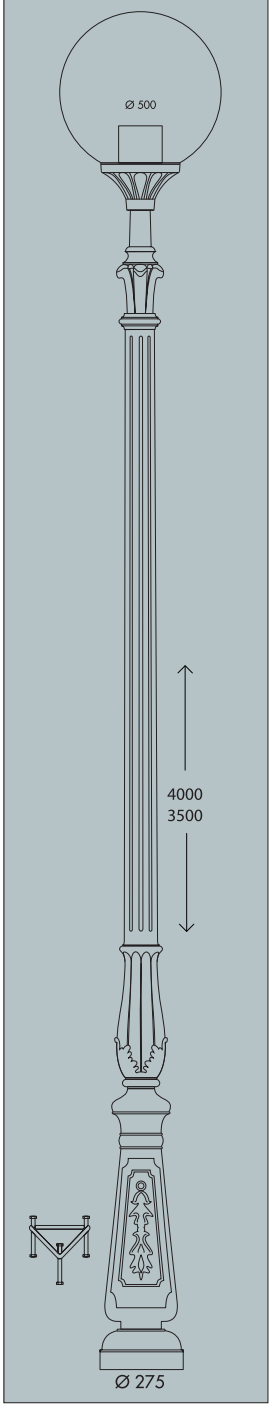

GIONA 4500-5000/GLOBE 500 CLASSIC

GRAND SIZE





MADE IN ITALY

GIONA 4500 ARON/G500 1L

G50.224.N10

Pcs 1
Kg 67,4
mc 1,031

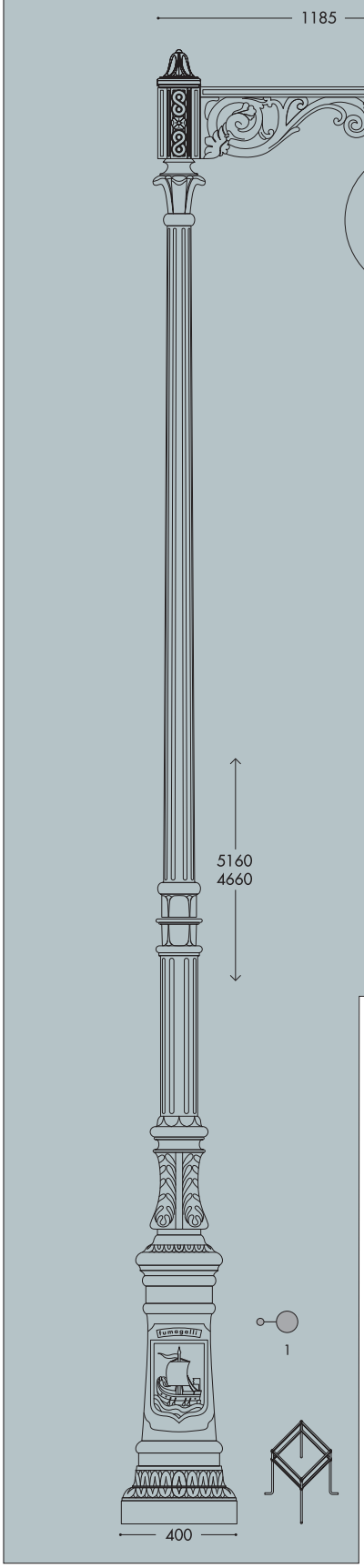

GIONA 5000 ARON/G500 1L

G50.227.N10

Pcs 1
Kg 69,4
mc 1,146

ARON/G500

G50.172

Pcs 1
Kg 8,9
mc 0,178

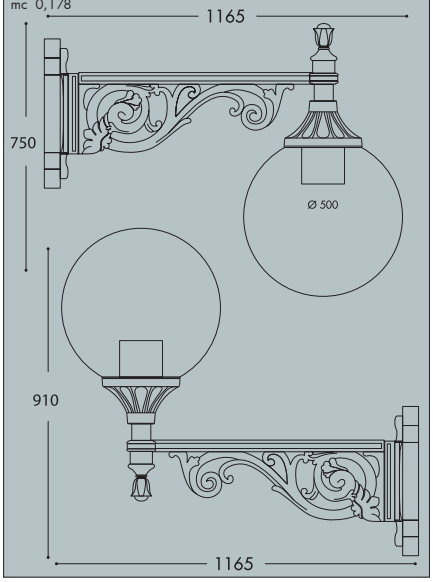

LOT/G500

G50.113

Pcs 2
Kg 9
mc 0,275

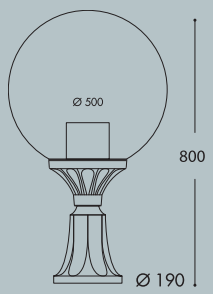

GIONA 4500 ARON/G500 2L

G50.224.N20

Pcs 1
Kg 74
mc 1,115

GIONA 5000 ARON/G500 2L

G50.227.N20

Pcs 1
Kg 76
mc 1,239

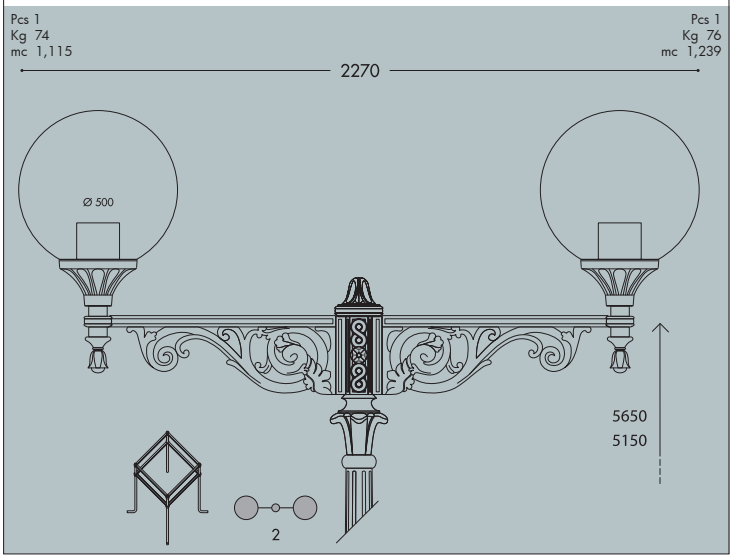

ERMON.R/G500

G50.195 resin

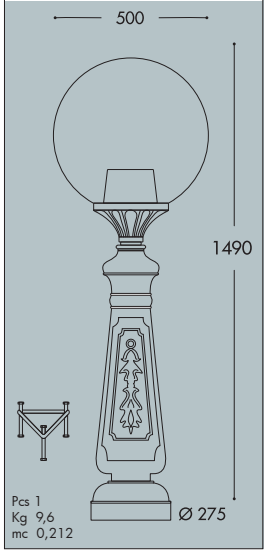

GIONA 4500 ARON/G500 4L

G50.224.N40

Pcs 1
Kg 89
mc 1,282

GIONA 5000 ARON/G500 4L

G50.227.N40

Pcs 1
Kg 91
mc 1,425

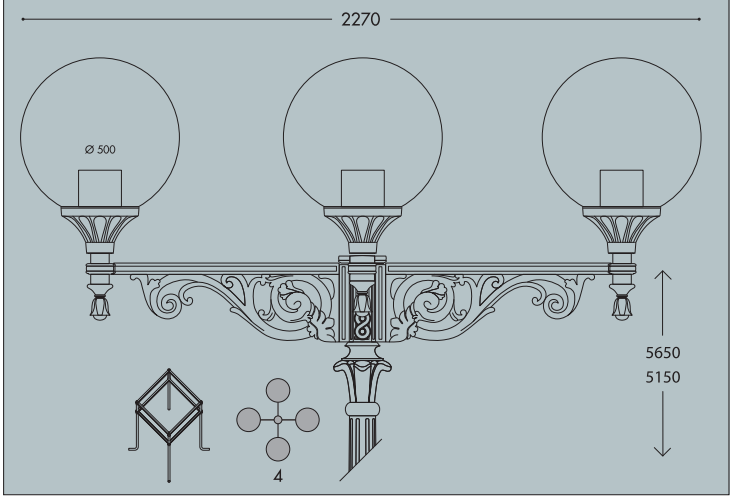

CANA 500

GRAND SIZE

PMMA amphora, complete with classic base made of shockproof resin material, UV-rays stabilized, rust and corrosion-free. Suitable for post top or wall installation. Base provided with E27 lampholder and prepared for louvre fixation. Insulation class II, protection rating IP65.

Anfora in polimetilmetacrilato (PMMA) completo di base classica realizzata in resina antiurto, stabilizzata ai raggi UV, inattaccabile da ruggine e corrosione. Idoneo per il montaggio a palo o a parete. Base fornita con portalampada E27 e predisposto per il fissaggio del frangiluce. Classe di isolamento II, grado di protezione IP65.



C50.B50.E27FC1

UV-TREATED
DOUBLE INSULATION
PUBLIC
RECYCLABLE
ANTI-SHOCK
TEMPERATURE
WALL
POST

MADE IN ITALY

CANA 500 - COMPONENTS

IP65

ELECTRICAL EQUIPMENT SEAT



Classic **AMPHORA** made of UV-rays stabilized polymethylmethacrylate (PMMA), one piece only.
Available in clear, opal or smoked colour.

ANFORA *in stile classico in polimetilmetacrilato (PMMA), resistente all'ingiallimento ed ai raggi UV, realizzato in un unico pezzo. Disponibile nei colori trasparente, bianco o fumé.*



Chrome aluminium **LOUVRE** with a laminar symmetrical optic system to direct the lighting output and to get a lower dazzle (optional).

FRANGILUCE *in alluminio cromato con sistema ottico lamellare a ripartizione simmetrica per orientare il fascio di luce e ridurre l'abbagliamento (opzionale).*



BASE, made of shockproof resin material, UV-rays stabilized, rust and corrosion-free, consisting of a support and of a cover provided with E27 lampholder.
A rubber gasket assures the protection of the electrical accessories seat against external agents.

BASE *realizzata in resina antiurto, stabilizzata ai raggi UV, inattaccabile da ruggine e corrosione. Composta da un supporto e da un coperchio in cui si trova l'alloggiamento per il portalampada E27 (incluso). Una guarnizione in gomma garantisce la protezione dell'alloggiamento degli accessori elettrici dagli agenti esterni.*



E27-E40



Amphora complete with classic base and **E27** or **E40** lampholder. Metal plate for ballast fixation available as an option (H.BAL.PLT)

suitable lamps:

CFL-LED
SON-HQI

max 100W

	*ADD. SUFFIX
E27 Lampholder only	.E27
E40 Lampholder only	.E40

PHOTOMETRIC DATA SAMPLE

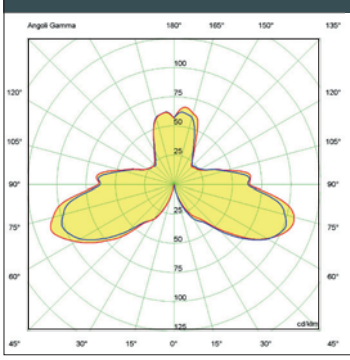

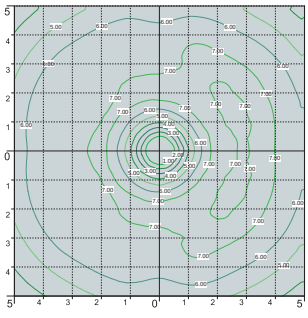

CANA 500 *clear SON 70W (with louvre).*

POST height 3,5mt
10 x 10mt area: average 6 lux

The photometric data for all the versions are available upon request or on our website.

CANA 500

C50.B50 *



Dimensions and weight
Height: 690 mm
Diameter: 400 mm
Junction to support: diameter 60 mm
Weight: 3,4 Kg
Area exposed to wind pressure:
CxS = m^2 0,122

Moulded colours:
Black *White*

Painted colours:
Antique green *Antique bronze*

Diffuser PMMA:
Clear *Opal*

CHROME ALUMINIUM LOUVRE

H.FC1 closed
Upward position



** ADD THE ABOVE SUFFIXES TO THE REFERENCES MENTIONED IN THE CATALOGUE*

KARMEL 3500-4000/CANA 500

GRAND SIZE





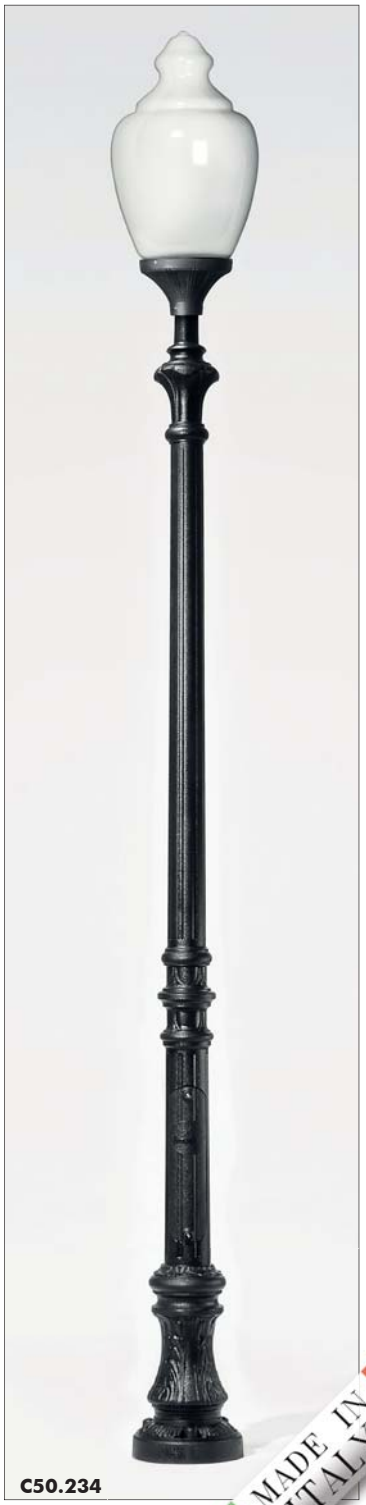

MADE IN ITALY

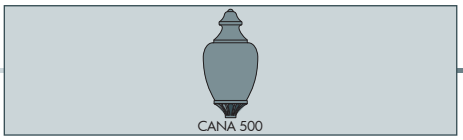

KARMEL 3500-4000/CANA 500

GRAND SIZE

LOT/CANA 500

C50.113

Pcs 1
Kg 4,3
mc 0,200

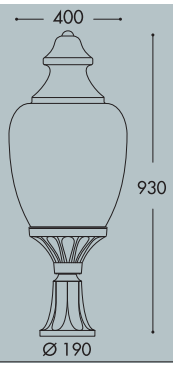

ADAM/CANA 500

C50.171

Pcs 1
Kg 4,9
mc 0,187

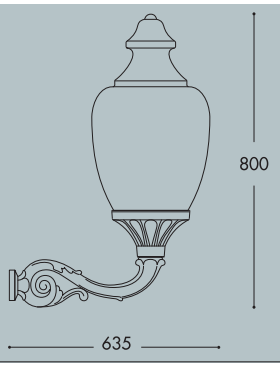

KARMEL 3500 ADAM/CANA 500 2L | KARMEL 4000 ADAM/CANA 500 2L

C50.234.M20 | C50.237.M20

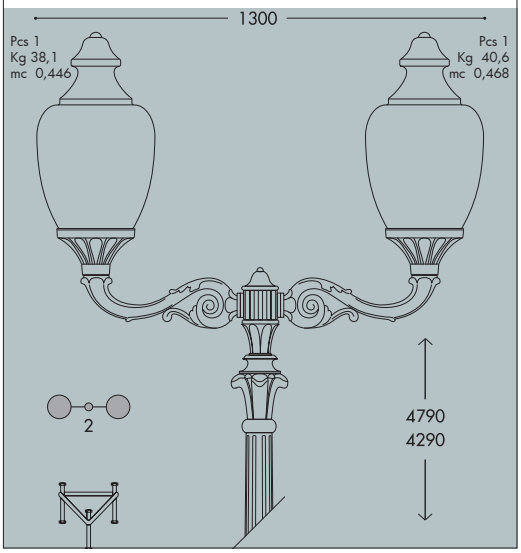

KARMEL 3500/ CANA 500 | KARMEL 4000/ CANA 500

C50.234 | C50.237

Pcs 1
Kg 31,4
mc 0,320

Pcs 1
Kg 33,9
mc 0,371

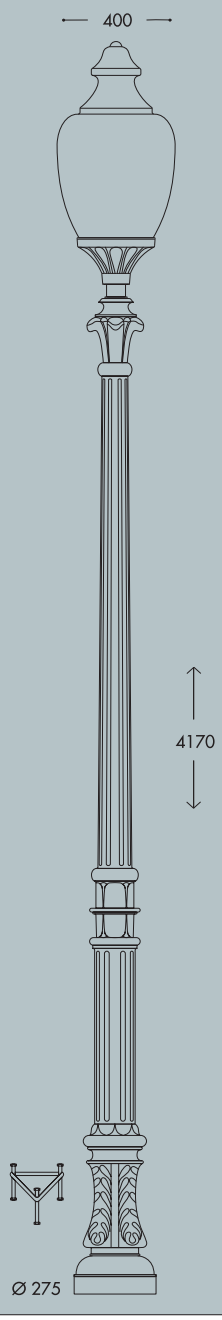

KARMEL 3500 ADAM/CANA 500 2+1 | KARMEL 4000 ADAM/CANA 500 2+1

C50.234.M21 | C50.237.M21

Pcs 1
Kg 41,5
mc 0,522

Pcs 1
Kg 44
mc 0,647

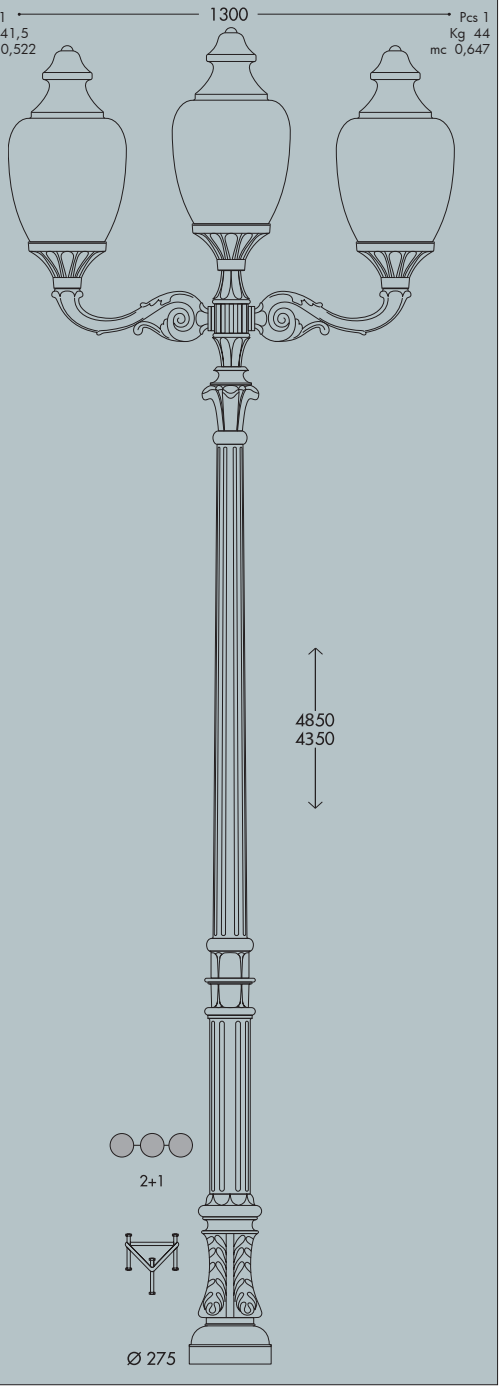

KARMEL 3500 ADAM/CANA 500 3L | KARMEL 4000 ADAM/CANA 500 3L

C50.234.M30 | C50.237.M30

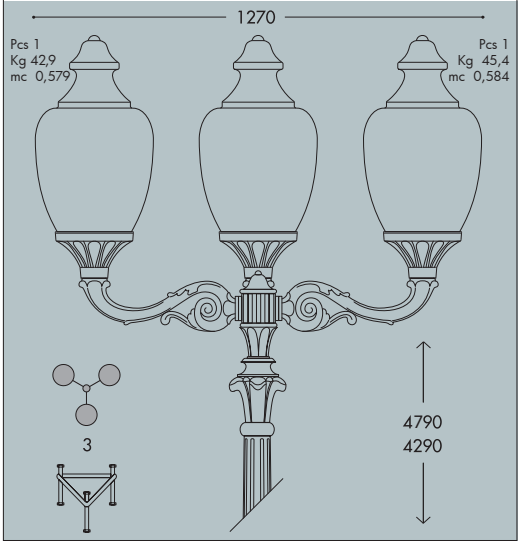

KARMEL 3500 ADAM/CANA 500 3+1 | KARMEL 4000 ADAM/CANA 500 3+1

C50.234.M31 | C50.237.M31

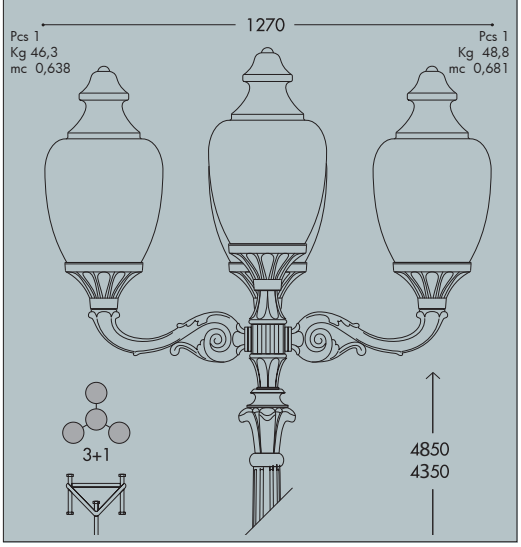

GIONA 4000/CANA 500

GRAND SIZE





MADE IN ITALY

GIONA 4000/CANA 500

C50.221

Pcs 1
Kg 58,4
mc 0,780

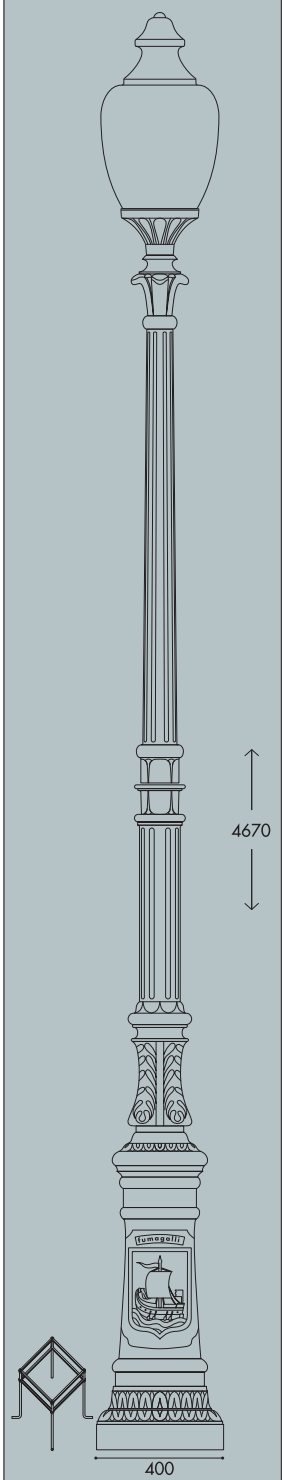

GIONA 4000 ADAM/CANA 500 3L

C50.221.M30

Pcs 1
Kg 69,9
mc 0,854

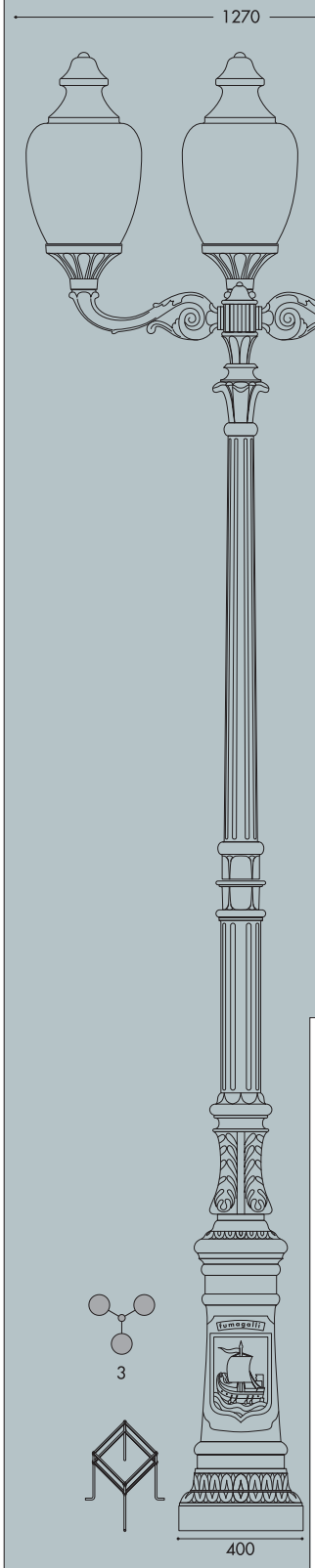

GIONA 4000 ADAM/CANA 500 2L

C50.221.M20

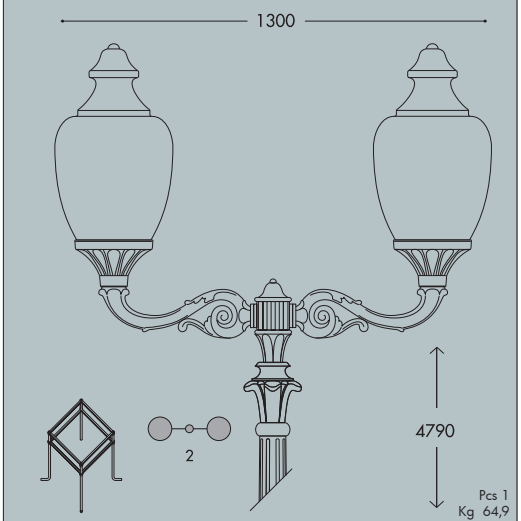

Pcs 1
Kg 64,9
mc 0,699

GIONA 4000 ADAM/CANA 500 2+1

C50.221.M21

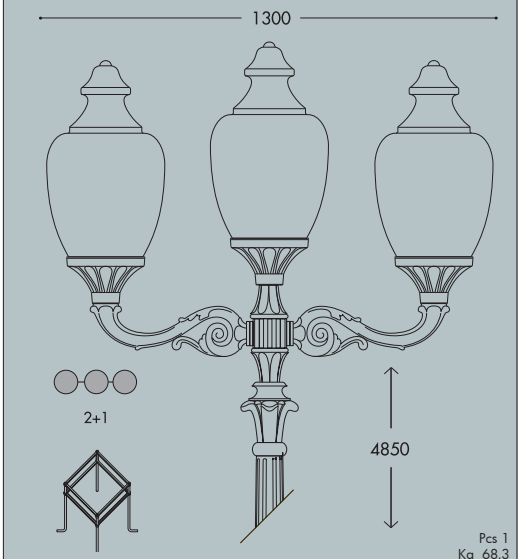

Pcs 1
Kg 68,3
mc 0,745

ERMON.R/CANA 500

C50.195 resin

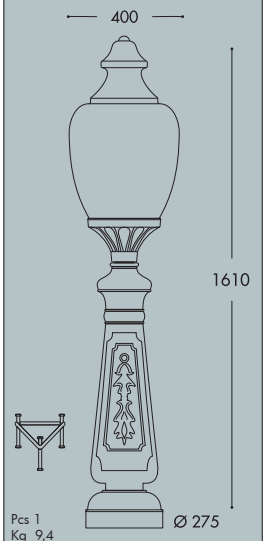

Pcs 1
Kg 9,4
mc 0,175

GIONA 4000 ADAM/CANA 500 3+1

C50.221.M31

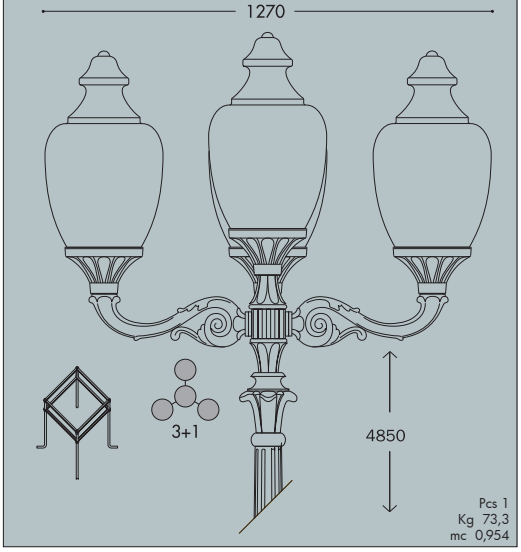

Pcs 1
Kg 73,3
mc 0,954





URBAN MODERN

GIORGIO-ROSA

FLOODLIGHT

Post top system complete with single or double luminaries made in in shockproof resin material, UV-rays stabilized, rust and corrosion-free. The provided bracket allows a fully adjustable floodlight position to direct the light emission. Supplied with TÜV approved, long-life and efficient **GX53 LED lamps included** or provided with **2x E27** lampholders. Insulation class II, Protection rating IP66.

*Sistema completo di diffusori per istallazioni a palo con luce singola o doppia. Fabbricato in resina antiurto stabilizzata ai raggi UV, inattaccabile da ruggine e corrosione. Il braccio in dotazione permette l'inclinazione e l'orientamento del proiettore per direzionare il flusso luminoso. Fornito con **incluse lampadine a LED GX53** approvate TÜV di lunga durata ed elevata efficienza o disponibile nella versione **2x E27**. Classe di isolamento II, grado di protezione IP66.*



GIORGIO
4P2.000.G10
4P1.000.G10

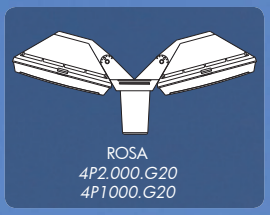

ROSA
4P2.000.G20
4P1000.G20



4P2.000.G10



4P2.000.G20

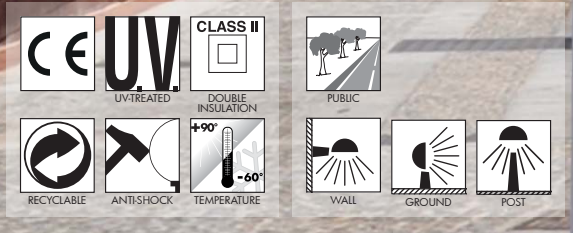

MADE IN ITALY

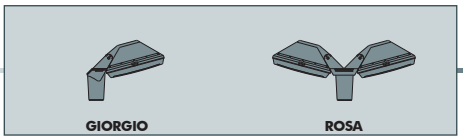

GIORGIO-ROSA

FLOODLIGHT

GIORGIO/ROSA - COMPONENTS

IP66



SINGLE LIGHT

DOUBLE LIGHT

Square **FLOODLIGHT** with no visible screws made in shockproof resin material, UV-rays stabilized, rust and corrosion-free. Supplied with TÜV approved, long-life and efficient GX53 LED lamps included or provided with 2x E27 lampholders.

PROIETTORE *quadro senza viti a vista, fabbricato in resina antiurto stabilizzata ai raggi UV, inattaccabile da ruggine e corrosione. Provvisto di lampadine a LED GX53 approvate TÜV di lunga durata ed elevata efficienza o fornito nella versione 2x E27.*

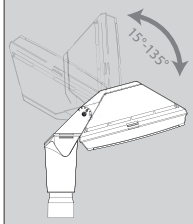

POST TOP SYSTEM with single or double bracket made in shockproof resin material, UV-rays stabilized. The provided bracket allows a fully adjustable position of the floodlight to direct at will the light emission.

SISTEMA A PALO *con braccio singolo o doppio realizzato in resina antiurto, stabilizzata ai raggi UV. Il braccio permette l'orientamento in qualsiasi posizione del proiettore per poter direzionare il flusso luminoso.*

GIORGIO

4P2.000.G10 *



Dimensions and weight
Height:200 mm
Width: 420 mm
Weight: 4 Kg

ROSA

4P2.000.G20 *



Dimensions and weight
Height:200 mm
Width: 700 mm
Weight: 6 Kg

Moulded Colours:
Black *Grey* *White*

Diffuser PMMA:
Opal

4x GX53 LED



4P2.000.G10 / 4P2.000.G20

Floodlight supplied with white resin reflective ceiling complete with TÜV approved long-life and efficient **4x GX53 LED lamps included**. Different wattages available. Quick and easy lamp replacement for a very simple maintenance after installation.

			*ADD. SUFFIX	
GX53 LED	4x 7W **28W**	**3200 Lm**	4000 K	.C4L
			3000 K	.C4R
	4x 10W **40W**	**4800 Lm**	4000 K	.D4L
			3000 K	.D4R

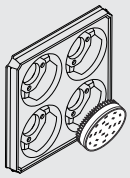

4x 10W
4800 Lm
=
100W
SON-HQI

SAVE 60%

GX53 LED



4P1.000

Floodlight supplied **fully pre-wired** and complete with TÜV approved, long-life and efficient **GX53 LED lamp** in different wattages.

			*ADD. SUFFIX	
GX53 LED	**7 W**	**600 Lm**	4000 K	.A1L
			3000 K	.A1R
	11 W	**1300 Lm**	4000 K	.B1L
			3000 K	.B1R
	18 W	**2000 Lm**	4000 K	.E1L
			3000 K	.E1R
GX53 LED	**7 W** + SENSOR	**600 Lm**	4000 K	.ASL
			3000 K	.ASR
	11 W + SENSOR	**1300 Lm**	4000 K	.BSL
			3000 K	.BSR
	18 W + SENSOR	**2000 Lm**	4000 K	.ESL
			3000 K	.ESR



7W
11W
18W
=
60W
100W
150W
incandescent

SAVE 90%

2x E27



4P2.000.G10 / 4P2.000.G20

Floodlight supplied **fully pre-wired** with white resin reflective ceiling and complete with **2x E27 lampholders.**
Daylight and motion sensor available as option. Sensor operating voltage: 220-240V. (120V version available on demand).

		*ADD. SUFFIX
2x E27 (CFL -LED)	max 160 mm ⟷	.E28
2x E27 + SENSOR	max 160 mm ⟷	.ES8

** ADD THESE SUFFIXES TO THE REFERENCES MENTIONED IN THE CATALOGUE*

LED LAMPS

More technical details about TÜV approved Fumagalli LED Lamps on page 512.

GIORGIO-ROSA

FLOODLIGHT









MADE IN ITALY

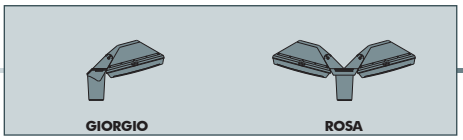

GIORGIO-ROSA

FLOODLIGHT

GIORGIO		
4P1.000.G10.B1L	**11W**	4P1.000.G10.B1R
4P1.000.G10.E1L	**18W**	4P1.000.G10.E1R
4P2.000.G10.C4L	**28W**	4P2.000.G10.C4R
4P2.000.G10.D4L	**40W**	4P2.000.G10.D4R

4000K GX53 LED LAMP INCLUDED *3000K*

Pcs 1
Kg 4
mc 0,029

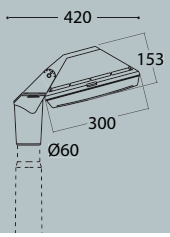

2x E27 lampholder 4P2.000.G10.E28

ROSA		
4P1.000.G20.B1L	**2x 11W**	4P1.000.G20.B1R
4P1.000.G20.E1L	**2x 18W**	4P1.000.G20.E1R
4P2.000.G20.C4L	**2x 28W**	4P2.000.G20.C4R
4P2.000.G20.D4L	**2x 40W**	4P2.000.G20.D4R

4000K GX53 LED LAMPS INCLUDED *3000K*

Pcs 1
Kg 6
mc 0,049

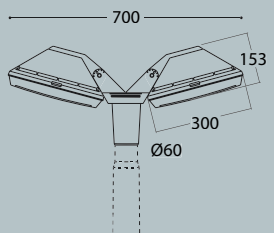

2x E27 lampholder 4P2.000.G20.E28

GIOVA/GIUSEPPE		
4P1.702.B1L	**11W**	4P1.702.B1R
4P1.702.E1L	**18W**	4P1.702.E1R
4P2.702.C4L	**28W**	4P2.702.C4R
4P2.702.D4L	**40W**	4P2.702.D4R

4000K GX53 LED LAMP INCLUDED *3000K*

Pcs 10
Kg 31
mc 0,195

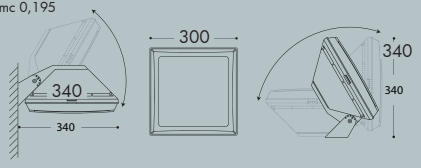

2x E27 lampholder 4P2.702.E28

EKTOR 2500/ROSA

4P2.361.G20

Pcs 1
Kg 27
mc 0,181

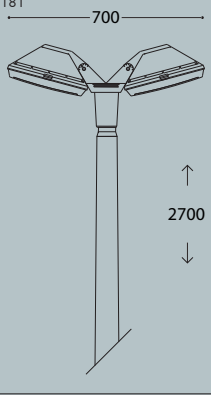

EKTOR 2500/GIORGIO

4P2.361.G10

Pcs 1
Kg 24
mc 0,161



EKTOR 4000/GIORGIO | AKILLE 4000/GIORGIO

4P2.371.G10 | 4P2.421.G10

Pcs 1
Kg 40
mc 0,240

EKTOR 3500/GIORGIO | AKILLE 3500/GIORGIO

4P2.367.G10 | 4P2.417.G10

Pcs 1
Kg 37
mc 0,214

EKTOR 3000/GIORGIO | AKILLE 3000/GIORGIO

4P2.364.G10 | 4P2.414.G10

Pcs 1
Kg 34
mc 0,188

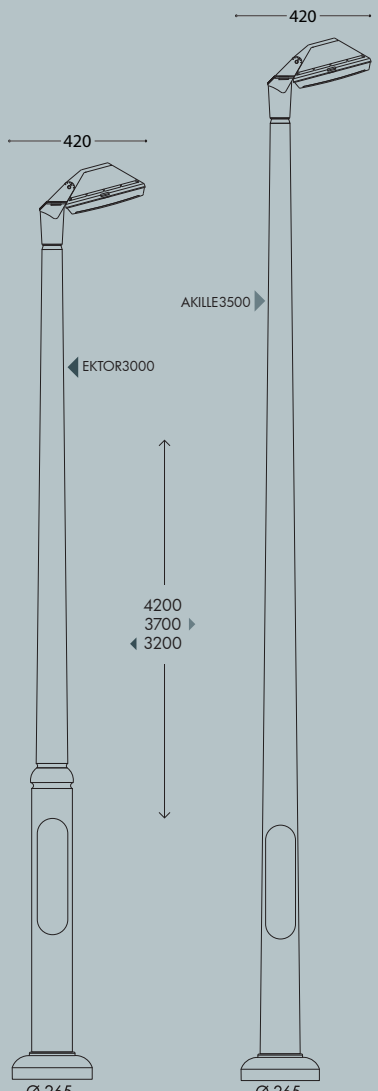

EKTOR 4000/ROSA | AKILLE 4000/ROSA

4P2.371.G20 | 4P2.421.G20

Pcs 1
Kg 43
mc 0,260

EKTOR 3500/ROSA | AKILLE 3500/ROSA

4P2.367.G20 | 4P2.417.G20

Pcs 1
Kg 40
mc 0,234

EKTOR 3000/ROSA | AKILLE 3000/ROSA

4P2.364.G20 | 4P2.414.G20

Pcs 1
Kg 37
mc 0,208

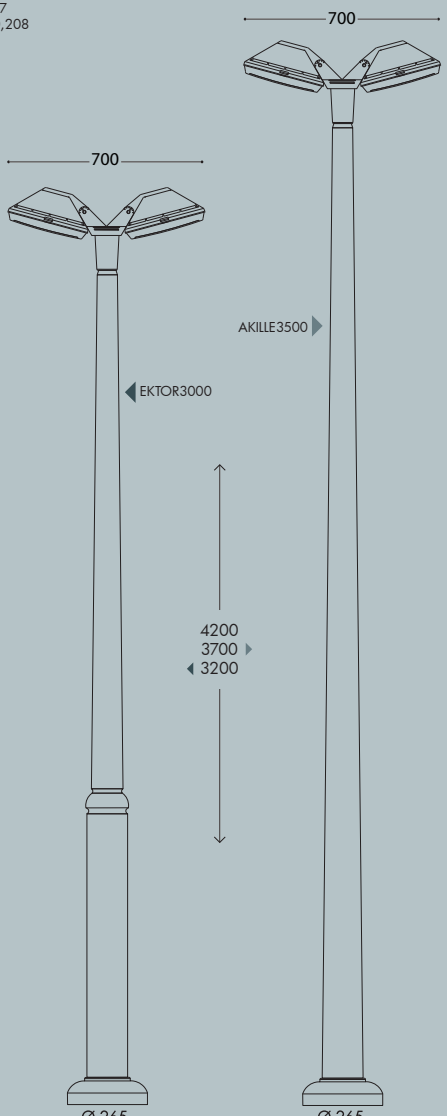

VIVI 400 HIGH POWER LED

LARGE SIZE

Modern luminaries made in shockproof resin material, UV rays stabilized, rust and corrosion-free. Suitable for post top, wall and hanging installation. Provided with reflective ceiling designed to host the lighting source and equipped with TÜV approved, long-life and efficient **E27 high power LED lamp included**. Insulation class II, Protection rating IP65.

Diffusore moderno realizzato in resina antiurto, stabilizzato ai raggi UV, inattaccabile da ruggine e corrosione. Idoneo per il montaggio a palo, a sospensione o a parete. Provvisto di soffitto riflettente progettato per accogliere la sorgente luminosa e fornito completo di ***lampada a LED E27 ad ALTA POTENZA****, approvata TÜV di lunga durata ed elevata efficienza. Classe di isolamento II, grado di protezione IP65.*



V50.000.H1L



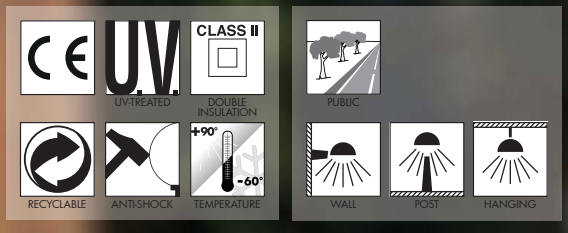

MADE IN ITALY

VIVI 400 HIGH POWER LED

LARGE SIZE

VIVI 400 HIGH POWER LED - COMPONENTS

IP65



ROOF made of shockproof resin material, UV-rays stabilized, rust and corrosion-free.

TETTO *realizzato in resina antiurto, stabilizzata ai raggi UV, inattaccabile da ruggine e corrosione.*

High temperature resistant reflective **CEILING** made of shockproof resin material. Provided with E27 lampholder and equipped with **HIGH POWER LED lamp**. Designed to host and protect the lighting source, granting its safe and quick installation.

SOFFITTO *riflettente realizzato in resina antiurto ad alta resistenza al calore. Fornito completo di portalampada E27 e provvisto di* ***lampada a LED ad ALTA POTENZA****. Progettato per accogliere e proteggere la sorgente luminosa e per garantirne una veloce e sicura installazione.*

DIFFUSER made of UV-rays stabilized polymethylmethacrylate (PMMA), one piece only, available in clear or opal colour.

DIFFUSORE *realizzato in polimetilmetacrilato (PMMA) stabilizzato ai raggi UV, un pezzo unico, disponibile in colore trasparente o opale.*

Decorative connection **RING** to be fixed on the luminaries diffuser.

ANELLO *decorativo di connessione da fissare sul diffusore dell'apparecchio.*

VIVI 400 HIGH POWER LED

V50.000 *



Dimensions and weight
Height: 420 mm
Diameter: 480 mm
Weight: 4,2 Kg
Junction to support: Ø 60 mm
Area expose to wind pressure:
CxS = m² 0,1449

Moulded colours:
Black *White* *Grey*

Diffuser PMMA:
Clear *Opal*

HIGH POWER LED



- **COST SAVING:** long-life and efficient LED light source.
- **BUILT-IN DRIVER:** quick and easy lamp replacement
- **GREAT FLEXIBILITY:** E27 standard lamp holder.
- **FUTURE-PROOFED LUMINARIES:** performances easy to upgrade to latest technology developments.
- **SUITABLE FOR OUTDOOR USE:** built-in driver fully protected against heat and humidity by silicone paste.

Luminaries equipped with TÜV approved, long-life and efficient **E27 high power LED lamp**, granting the same luminous flux of traditional SON/HQI lighting sources. The lamp can be quickly and easily replaced, making the luminaries maintenance very simple.

			*ADD. SUFFIX
E27	30 W	3300 Lm	4000 K .Q1L
			3000 K .Q1R
E27	50 W	5000 Lm	4000 K .H1L
			3000 K .H1R

** ADD THESE SUFFIXES TO THE REFERENCES MENTIONED IN THE CATALOGUE*

LED LAMPS

More technical details about TÜV approved Fumagalli LED Lamps on page 512.

PHOTOMETRIC DATA SAMPLE - VIVI 400 HIGH POWER LED

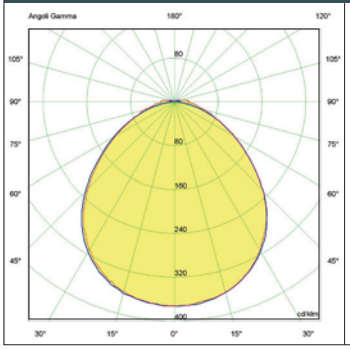

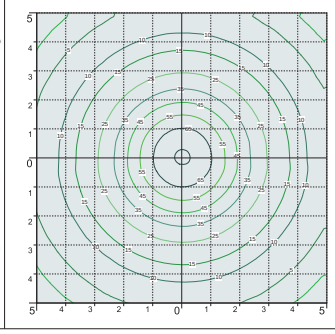

SAVE -40%

HIGH POWER LED 50W (power consumption)

Area: 10x10mt
Height: 3,5mt
28 lux

=

VIVI 400 E27

HQI 70W 84W (power consumption)

Area: 10x10mt
Height: 3,5mt
28 lux

VIVI 400 GX53 LED

LARGE SIZE

Modern luminaries made of shockproof resin material, UV-rays stabilized, rust and corrosion-free. Suitable for post top, wall and hanging installation. Equipped with TÜV approved, long-life and efficient **GX53 LED modular system** in different wattages. Designed according to the international regulations against light pollution (standard UNI 10819). Insulation class II, Protection rating IP65.

*Diffusore moderno realizzato in resina antiurto, stabilizzato ai raggi UV, inattaccabile da ruggine e corrosione. Idoneo per il montaggio a palo, a sospensione o a parete. Provvisto di **sistema modulare a LED GX53** approvato TÜV di lunga durata ed alta efficienza disponibile in diverse potenze. Progettato in ottemperanza alle norme internazionali contro l'inquinamento luminoso (standard UNI 10819). Classe di isolamento II, grado di protezione IP65.*



V50.000.D6L

UV-TREATED
DOUBLE INSULATION
RECYCLABLE
ANTI-SHOCK
+90°
-60°
TEMPERATURE
PUBLIC
ZONE 2
WALL
POST
HANGING

MADE IN ITALY

VIVI 400 GX53 LED

LARGE SIZE

VIVI 400 GX53 LED - COMPONENTS

IP65



ROOF made of shockproof resin material one piece only, UV-rays stabilized, rust and corrosion-free.

TETTO *in un unico pezzo, realizzato in resina antiurto, stabilizzata ai raggi UV, inattaccabile da ruggine e corrosione.*



DIFFUSER made of UV-rays stabilized polymethylmethacrylate (PMMA), one piece only, available in clear or opal colour.

DIFFUSORE *realizzato in polimetilmetacrilato (PMMA) stabilizzato ai raggi UV, disponibile in colore trasparente o opale.*





Decorative connection **RING** to be fixed on the luminaries diffuser.

ANELLO *decorativo di connessione da fissare sul diffusore dell'apparecchio.*

VIVI 400 GX53 LED

V50.000 *



Dimensions and weight
Height: 420 mm
Diameter: 480 mm
Weight: 4,9 Kg
Junction to support: Ø 60 mm
Area expose to wind pressure:
CxS = m^2 0,1449

Moulded colours:
Black *White* *Grey*

Diffuser PMMA:
Clear *Opal*

GX53 LED



- **COST SAVING:** long-life and efficient LED light sources.
- **BUILT-IN DRIVER:** quick and easy lamp replacement
- **GREAT FLEXIBILITY:** GX53 standard lamp holder.
- **FUTURE-PROOFED LUMINARIES:** performances easy to upgrade to latest technology developments.
- **SUITABLE FOR OUTDOOR USE:** built-in driver fully protected against heat and humidity by silicone paste.

Luminaries supplied with white resin CEILING provided with TÜV approved, long-life and efficient **6x GX53 LED lamps included**. Each lamp can be quickly and easily replaced individually, making the luminaries maintenance very simple.


GX53 LED

			*ADD. SUFFIX
6x 7W **42W**	**4800 Lm**	4000 K	.C6L
		3000 K	.C6R
6x 10W **60W**	**7200 Lm**	4000 K	.D6L
		3000 K	.D6R

** ADD THESE SUFFIXES TO THE REFERENCES MENTIONED IN THE CATALOGUE*

LED LAMPS

More technical details about TÜV approved Fumagalli LED Lamps on page 512.

PHOTOMETRIC DATA SAMPLE - VIVI 400 GX53 LED

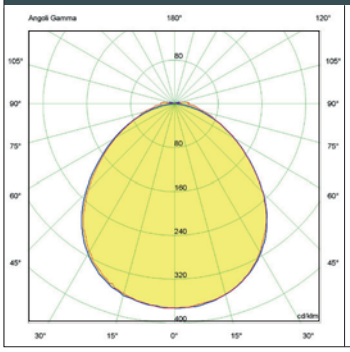

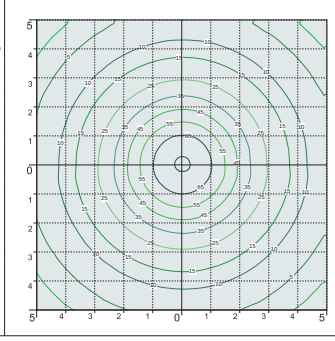



SAVE -48%

6x10W GX53 LED 60W
(power consumption)

Area: 10x10mt
Height: 3,5mt
37 lux

=

VIVI 400 E27



HQI 100W 112W
(power consumption)

Area: 10x10mt
Height: 3,5mt
38 lux

VIVI 400 E27

LARGE SIZE

Modern luminaries made of shockproof resin material, UV-rays stabilized, rust and corrosion-free. Suitable for post top, wall and hanging installation. Provided with high temperature resistant ceiling suitable for horizontal bulb fixation and with aluminum reflector to optimize the light distribution. Designed according to the international regulations against light pollution (standard UNI 10819). Insulation class II, Protection rating IP65.

Diffusore moderno realizzato in resina antiurto, stabilizzato ai raggi UV, inattaccabile da ruggine e corrosione. Idoneo per il montaggio a palo, a sospensione o a parete. Fornito con soffitto ad alta resistenza al calore idoneo per il fissaggio orizzontale della lampadina e provvisto di parabola riflettente in alluminio per direzionare il flusso luminoso. Progettato in ottemperanza alle norme internazionali contro l'inquinamento luminoso (standard UNI 10819). Classe di isolamento II, grado di protezione IP65.



V50.000.E27

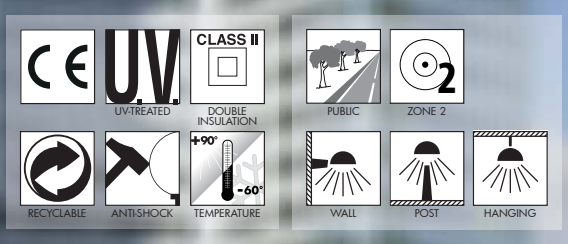

VIVI 400 E27 - E40 - COMPONENTS

IP65



ROOF made of shockproof resin material, UV-rays stabilized, rust and corrosion-free.

TETTO *realizzato in resina antiurto, stabilizzata ai raggi UV, inattaccabile da ruggine e corrosione.*

High temperature resistant **CEILING** made of white polycarbonate (PC), UV-rays stabilized, suitable for ballast fixation on its upper side and provided with E27 or E40 lampholder on its lower side. Bulb in horizontal position.

SOFFITTO *realizzato in policarbonato bianco (PC) ad alta resistenza al calore, stabilizzato ai raggi UV, nella cui parte superiore vengono fissati i reattori. Fornito completo di portalampada E27 o E40 atto a sostenere la lampadina in posizione orizzontale.*

Parabolic **REFLECTOR** made of anodized aluminium, designed to optimize the light distribution and to limit the skyward dispersion of the luminous flux.

PARABOLA *riflettente realizzata in alluminio anodizzato, progettata per ottimizzare la distribuzione del flusso luminoso e limitarne la dispersione verso il cielo.*

DIFFUSER made of UV-rays stabilized polymethylmethacrylate (PMMA), one piece only, available in clear or opal colour.

DIFFUSORE *realizzato in polimetilmetacrilato (PMMA) stabilizzato ai raggi UV, un pezzo unico, disponibile in colore trasparente o opale.*

Decorative connection **RING** to be fixed on the luminaries diffuser.

ANELLO *decorativo di connessione da fissare sul diffusore dell'apparecchio.*

VIVI 400 E27

V50.000 *



Dimensions and weight
Height: 420 mm
Diameter: 480 mm
Weight: 3,7 Kg
Junction to support: Ø 60 mm
Area expose to wind pressure:
CxS = m^2 0,1449

Moulded colours:
Black *White* *Grey*

Diffuser PMMA:
Clear *Opal*

E27-E40



Luminaries supplied with E27 or E40 lampholder. Metal plate for ballast fixation available as an option (H.BAL.PLT)

suitable lamps:

CFL-LED
SON-HQI

max 100W

	*ADD. SUFFIX
E27 Lampholder only	.E27
E40 Lampholder only	.E40

HORIZONTAL BULB

AGAINST LIGHT POLLUTION

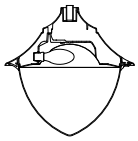

E27 - E40 VERSION

** ADD THESE SUFFIXES TO THE REFERENCES MENTIONED IN THE CATALOGUE*

PHOTOMETRIC DATA SAMPLE

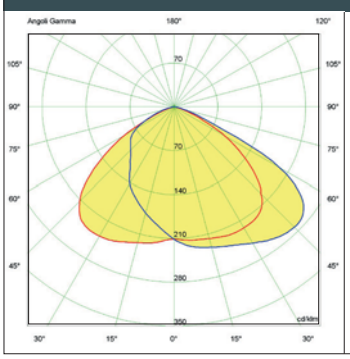

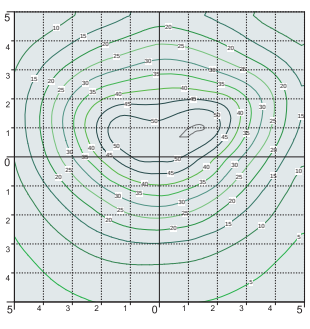

VIVI 400 E27 *clear HQI 70W.*

POST height 4mt
10x10mt area: average 28 lux

The photometric data for all the versions are available upon request or on our website.

VIVI 400

LARGE SIZE





MADE IN ITALY

MIDIPILAR/VIVI400

V50.254

Pcs 1
Kg 5,5
mc 0,092

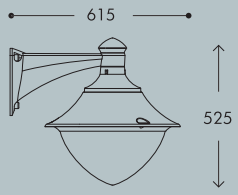

NEW LOT/VIVI400

V50.115

Pcs 1
Kg 5,2
mc 0,071

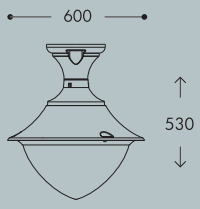

VIVI 400

V50.000

Pcs 1
Kg 4,9
mc 0,09

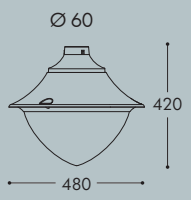

MARIO/VIVI400

V50.129

Pcs 1
Kg 5,2
mc 0,07

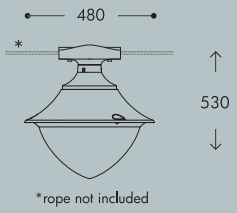

EKTOR 2500 MIDIPILAR/VIVI400 1L

V50.361.A10

Pcs 1
Kg 30,6
mc 0,235

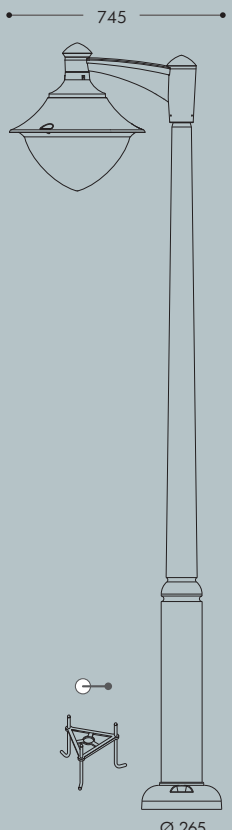

EKTOR 3000 MIDIPILAR/VIVI400 1L	AKILLE 3000 MIDIPILAR/VIVI400 1L
V50.364.A10	V50.414.A10

Pcs 1
Kg 34
mc 0,262

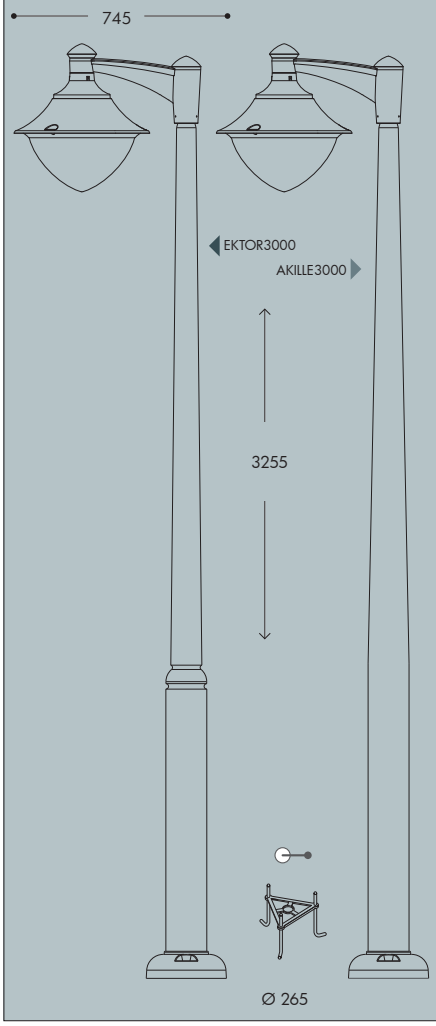

EKTOR 4000 MIDIPILAR/VIVI400 1L	AKILLE 4000 MIDIPILAR/VIVI400 1L
V50.371.A10	V50.421.A10

Pcs 1
Kg 41
mc 0,314

EKTOR 3500 MIDIPILAR/VIVI400 1L	AKILLE 3500 MIDIPILAR/VIVI400 1L
V50.367.A10	V50.417.A10

Pcs 1
Kg 37,5
mc 0,284

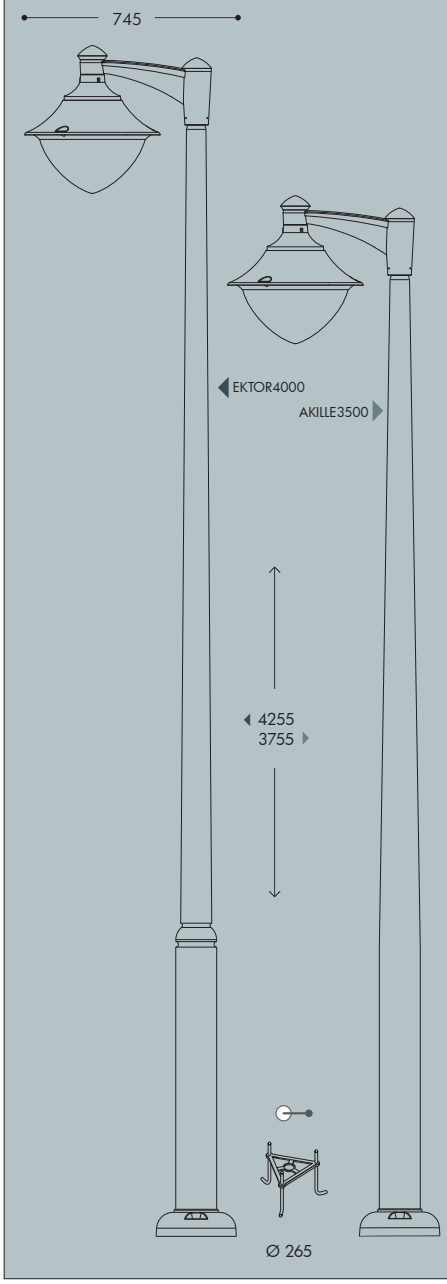

VIVI 400

LARGE SIZE









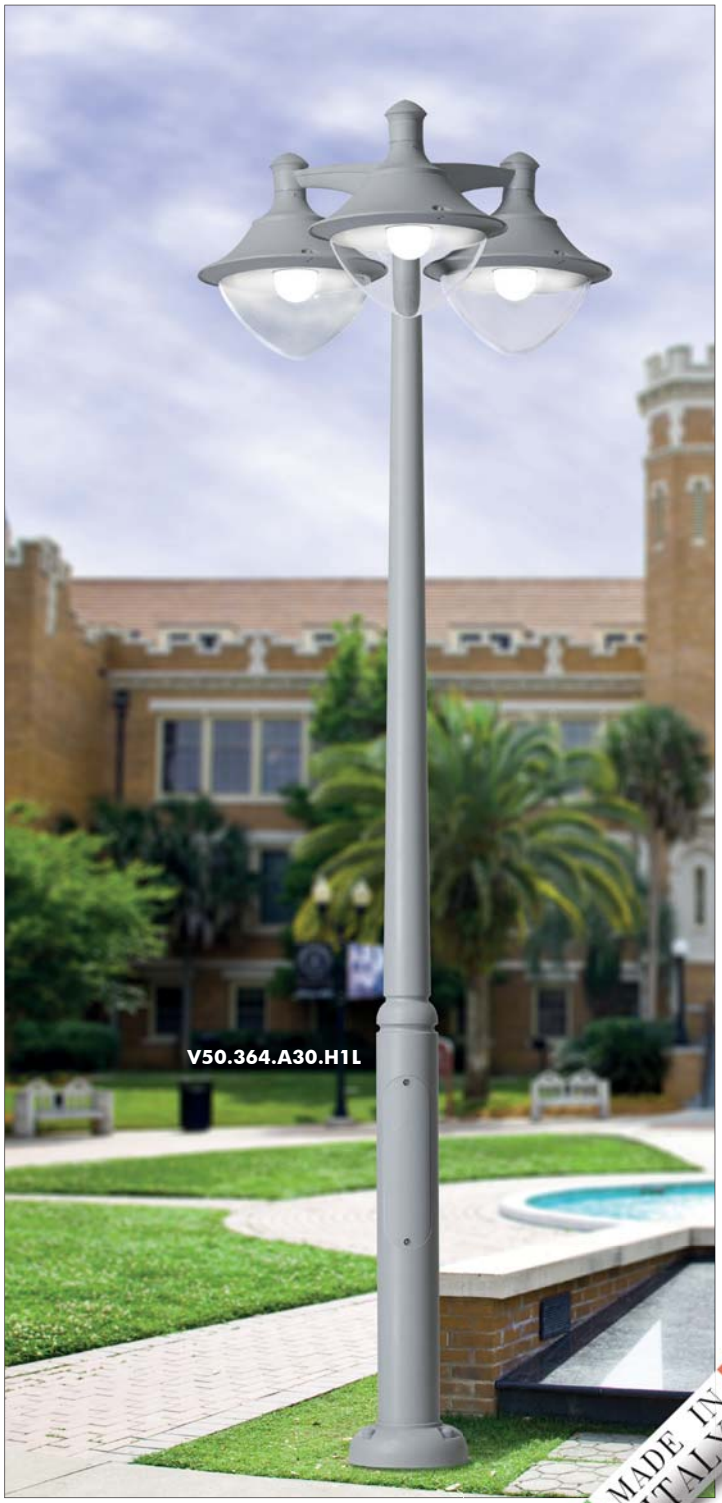

MADE IN ITALY

EKTOR 2500 MIDIPILAR/VIVI400 3L

V50.361.A30

Pcs 1
Kg 42
mc 0,497

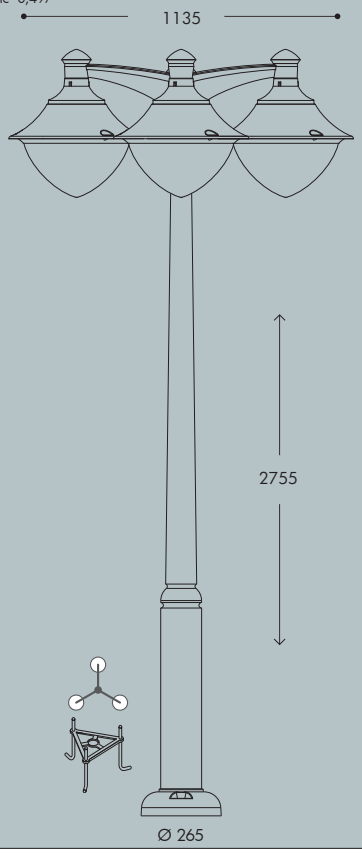

EKTOR 2500 MIDIPILAR/VIVI400 2L

V50.361.A20

Pcs 1
Kg 86,2
mc 0,306

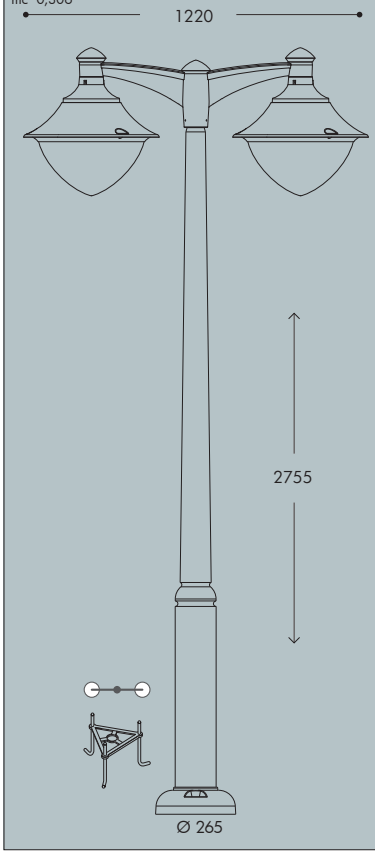

EKTOR 4000 MIDIPILAR/VIVI400 2L	AKILLE 4000 MIDIPILAR/VIVI400 2L
V50.371.A20	V50.421.A20

Pcs 1
Kg 46,5
mc 0,385

EKTOR 3500 MIDIPILAR/VIVI400 2L	AKILLE 3500 MIDIPILAR/VIVI400 2L
V50.367.A20	V50.417.A20

Pcs 1
Kg 43
mc 0,358

EKTOR 3000 MIDIPILAR/VIVI400 2L	AKILLE 3000 MIDIPILAR/VIVI400 2L
V50.364.A20	V50.414.A20

Pcs 1
Kg 39,6
mc 0,332

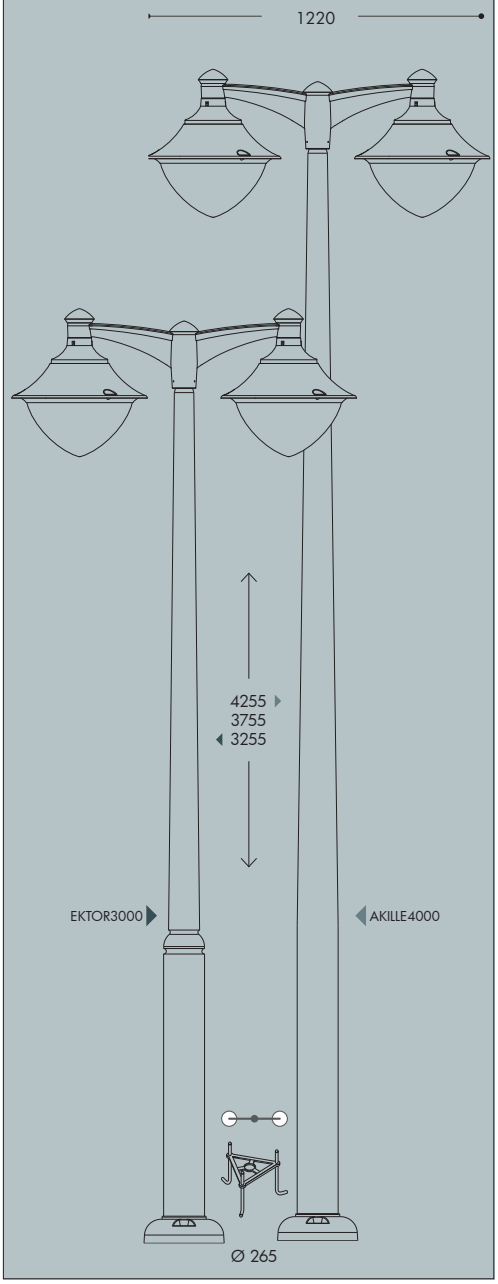

EKTOR 4000 MIDIPILAR/VIVI400 3L	AKILLE 4000 MIDIPILAR/VIVI400 3L
V50.371.A30	V50.421.A30

Pcs 1
Kg 52
mc 0,576

EKTOR 3500 MIDIPILAR/VIVI400 3L	AKILLE 3500 MIDIPILAR/VIVI400 3L
V50.367.A30	V50.417.A30

Pcs 1
Kg 48,6
mc 0,55

EKTOR 3000 MIDIPILAR/VIVI400 3L	AKILLE 3000 MIDIPILAR/VIVI400 3L
V50.364.A30	V50.414.A30

Pcs 1
Kg 45,2
mc 0,523

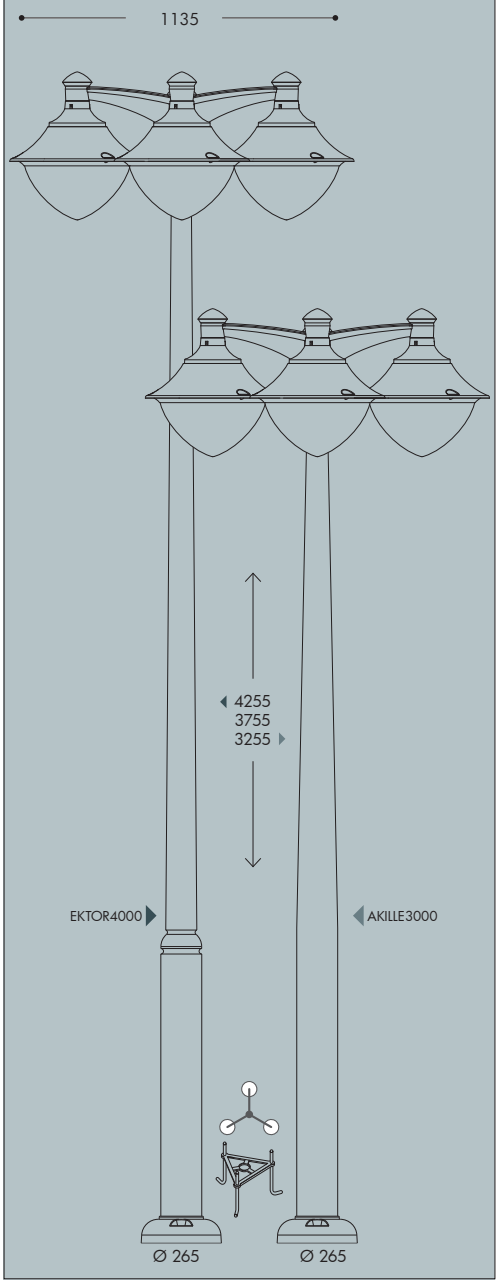

ECOVIVI 400 GX53 LED

LARGE SIZE

Modern luminaries made of shockproof resin material, UV-rays stabilized, rust and corrosion-free. Suitable for post top, wall and hanging installation. Supplied with flat diffuser granting no upward light emission. Equipped with TÜV approved, long-life and efficient **GX53 LED modular system** in different wattages. Designed according to the international regulations against light pollution (standard UNI 10819 – Installation area: Zone 1). Insulation class II, Protection rating IP65.

Diffusore moderno realizzato in resina antiurto, stabilizzato ai raggi UV, inattaccabile da ruggine e corrosione. Idoneo per il montaggio a palo, a sospensione o a parete. Fornito con diffusore piatto per garantire assenza di emissioni di luce verso l'alto. Provvisto di **sistema *modulare a LED GX53*** *approvato TÜV di lunga durata ed alta efficienza disponibile in diverse potenze. Progettato in ottemperanza alle norme internazionali contro l'inquinamento luminoso (standard UNI 10819 – Area di installazione: Zona 1). Classe di isolamento II, grado di protezione IP65.*



EV4.000.C6L

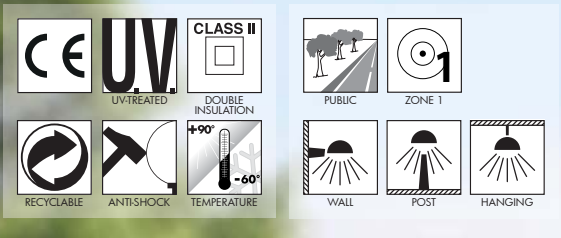

MADE IN ITALY

ECOVIVI 400 GX53 LED - COMPONENTS

IP65



ROOF made of shockproof resin material one piece only, UV-rays stabilized, rust and corrosion-free.

TETTO *in un unico pezzo, realizzato in resina antiurto, stabilizzata ai raggi UV, inattaccabile da ruggine e corrosione.*



DIFFUSER with flat shape to avoid the skyward dispersion of the luminous flux, according to the international regulations against light pollution and in particular the standard UNI 108119. Made of UV-rays stabilized polycarbonate (PC).

DIFFUSORE *con configurazione piatta per evitare la dispersione verso il cielo del flusso luminoso, in ottemperanza alle norme internazionali sull'inquinamento luminoso ed in particolare la norma UNI 10819. Realizzato in policarbonato (PC) stabilizzato ai raggi UV.*





Decorative connection **RING** to be fixed on the luminaries diffuser.

ANELLO *decorativo di connessione da fissare sul diffusore dell'apparecchio.*

ECOVIVI 400 GX53 LED

EV4.000 *



Dimensions and weight
Height: 243 mm
Diameter: 480 mm
Weight: 4,6 Kg
Junction to support: diameter 60 mm
Area expose to wind pressure:
CxS = m^2 0,1449

Moulded colours:
Black *White* *Grey*

Diffuser PC (UV treated):
Clear

GX53 LED



- **COST SAVING:** long-life and efficient LED light sources.
- **BUILT-IN DRIVER:** quick and easy lamp replacement
- **GREAT FLEXIBILITY:** GX53 standard lamp holder.
- **FUTURE-PROOFED LUMINARIES:** performances easy to upgrade to latest technology developments.
- **SUITABLE FOR OUTDOOR USE:** built-in driver fully protected against heat and humidity by silicone paste.

Luminaries supplied with white resin CEILING provided with TÜV approved, long-life and efficient **6x GX53 LED lamps included**. Each lamp can be quickly and easily replaced individually, making the luminaries maintenance very simple.


GX53 LED

			*ADD. SUFFIX
6x 7W **42W**	**4800 Lm**	4000 K	.C6L
		3000 K	.C6R
6x 10W **60W**	**7200 Lm**	4000 K	.D6L
		3000 K	.D6R

LED LAMPS

More technical details about TÜV approved Fumagalli LED Lamps on page 512.

** ADD THESE SUFFIXES TO THE REFERENCES MENTIONED IN THE CATALOGUE*

PHOTOMETRIC DATA SAMPLE - ECOVIVI 400 GX53 LED

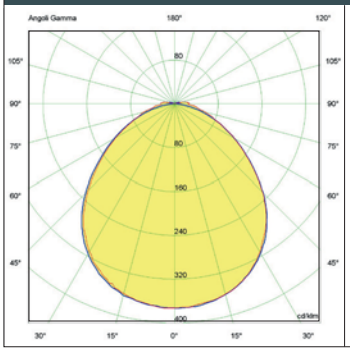

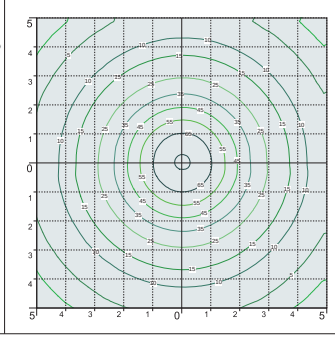



SAVE -48%

6x10W GX53 LED 60W
(power consumption)

Area: 10x10mt
Height: 3,5mt
37 lux

=

ECOVIVI 400 E27



HQI 100W 112W
(power consumption)

Area: 10x10mt
Height: 3,5mt
38 lux

ECOVIVI 400 E27

LARGE SIZE

Modern luminaries made of shockproof resin material, UV-rays stabilized, rust and corrosion-free. Suitable for post top, wall and hanging installation. Supplied with flat diffuser granting no upward light emission. Provided with high temperature resistant ceiling suitable for horizontal bulb fixation and with aluminum reflector to optimize the light distribution. Designed according to the international regulations against light pollution (standard UNI 10819 - Installation area: Zone 1). Insulation class II, Protection rating IP65.

Diffusore moderno realizzato in resina antiurto, stabilizzato ai raggi UV, inattaccabile da ruggine e corrosione. Idoneo per il montaggio a palo, a sospensione o a parete. Fornito con diffusore piatto per garantire assenza di emissioni di luce verso l'alto. Provvisto di soffitto ad alta resistenza al calore idoneo per il fissaggio orizzontale della lampadina e completo di parabola riflettente in alluminio per direzionare il flusso luminoso. Progettato in ottemperanza alle norme internazionali contro l'inquinamento luminoso (standard UNI 10819 – Area di installazione: Zona 1). Classe di isolamento II, grado di protezione IP65.



EV4.000.E27

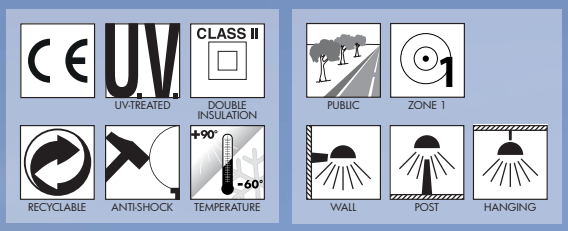

ECOVIVI 400 E27 - E40 - COMPONENTS

IP65



ROOF made of shockproof resin material, UV-rays stabilized, rust and corrosion-free.

TETTO *realizzato in resina antiurto, stabilizzata ai raggi UV, inattaccabile da ruggine e corrosione.*

High temperature resistant **CEILING** made of white polycarbonate (PC), UV-rays stabilized, suitable for ballast fixation on its upper side and provided with E27 or E40 lampholder on its lower side. Bulb in horizontal position.

SOFFITTO *realizzato in policarbonato bianco (PC) ad alta resistenza al calore, stabilizzato ai raggi UV, nella cui parte superiore vengono fissati i reattori. Fornito completo di portalampada E27 o E40 atto a sostenere la lampadina in posizione orizzontale.*

Parabolic **REFLECTOR** made of anodized aluminium, designed to optimize the light distribution and to limit the skyward dispersion of the luminous flux.

PARABOLA *riflettente realizzata in alluminio anodizzato, progettata per ottimizzare la distribuzione del flusso luminoso e limitarne la dispersione verso il cielo.*

DIFFUSER with flat shape to avoid the skyward dispersion of the luminous flux, according to the international regulations against light pollution and in particular the standard UNI 108119. Made of UV-rays stabilized polycarbonate (PC).

DIFFUSORE *con configurazione piatta per evitare la dispersione verso il cielo del flusso luminoso, in ottemperanza alle norme internazionali sull'inquinamento luminoso ed in particolare la norma UNI 10819. Realizzato in policarbonato (PC) stabilizzato ai raggi UV.*

Decorative connection **RING** to be fixed on the luminaries diffuser.

ANELLO *decorativo di connessione da fissare sul diffusore dell'apparecchio.*

ECOVIVI 400 E27

EV4.000 *



Dimensions and weight
Height: 243 mm
Diameter: 480 mm
Weight: 3,4 Kg
Junction to support: diameter 60 mm
Area expose to wind pressure:
CxS = m² 0,1449

Moulded colours:
Black *White* *Grey*

Diffuser PC (UV treated):
Clear

E27-E40



Luminaries supplied with E27 or E40 lampholder. Metal plate for ballast fixation available as an option (H.BAL.PLT)

suitable lamps:

CFL-LED
SON-HQI

max 100W

	*ADD. SUFFIX
E27 Lampholder only	.E27
E40 Lampholder only	.E40

** ADD THESE SUFFIXES TO THE REFERENCES MENTIONED IN THE CATALOGUE*

HORIZONTAL BULB
AGAINST LIGHT POLLUTION

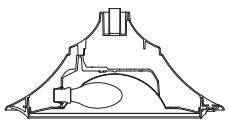

E27 - E40 VERSION

PHOTOMETRIC DATA SAMPLE

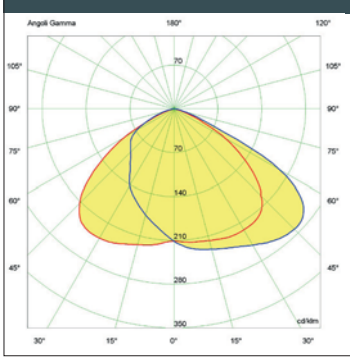

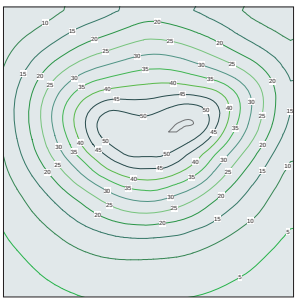

ECOVIVI 400 *clear HQI 70W.*

POST height 3,5mt
10x10mt area: average 28 lux

The photometric data for all the versions are available upon request or on our website.

ECOVIVI 400

LARGE SIZE



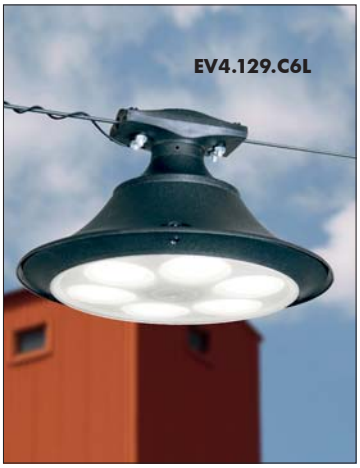





MADE IN ITALY

MIDIPILAR/ECOVIVI400

EV4.254

Pcs 1
Kg 5,2
mc 0,092

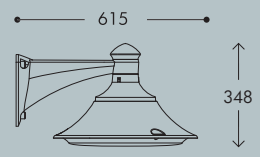

NEW LOT/ECOVIVI400

EV4.115

Pcs 1
Kg 4,9
mc 0,071

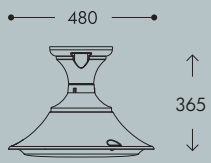

ECOVIVI 400

EV4.000

Pcs 1
Kg 4,6
mc 0,09

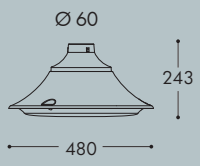

MARIO/ECOVIVI400

EV4.129

Pcs 1
Kg 4,9
mc 0,07

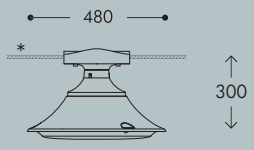

*rope not included

EKTOR 2500 MIDIPILAR/ECOVIVI400 1L

EV4.361.A10

Pcs 1
Kg 30,3
mc 0,235



EKTOR 3000 MIDIPILAR/ ECOVIVI400 1L	AKILLE 3000 MIDIPILAR/ ECOVIVI400 1L
EV4.364.A10	EV4.414.A10

Pcs 1
Kg 33,7
mc 0,262

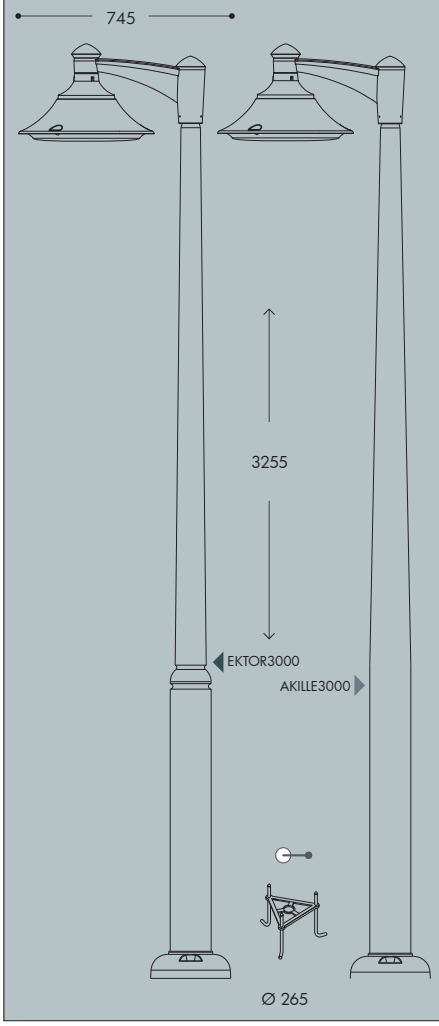

EKTOR 4000 MIDIPILAR/ECOVIVI400 1L	AKILLE 4000 MIDIPILAR/ECOVIVI400 1L
EV4.371.A10	EV4.421.A10

Pcs 1
Kg 40,5
mc 0,314

EKTOR 3500 MIDIPILAR/ECOVIVI400 1L	AKILLE 3500 MIDIPILAR/ECOVIVI400 1L
EV4.367.A10	EV4.417.A10

Pcs 1
Kg 37,1
mc 0,284

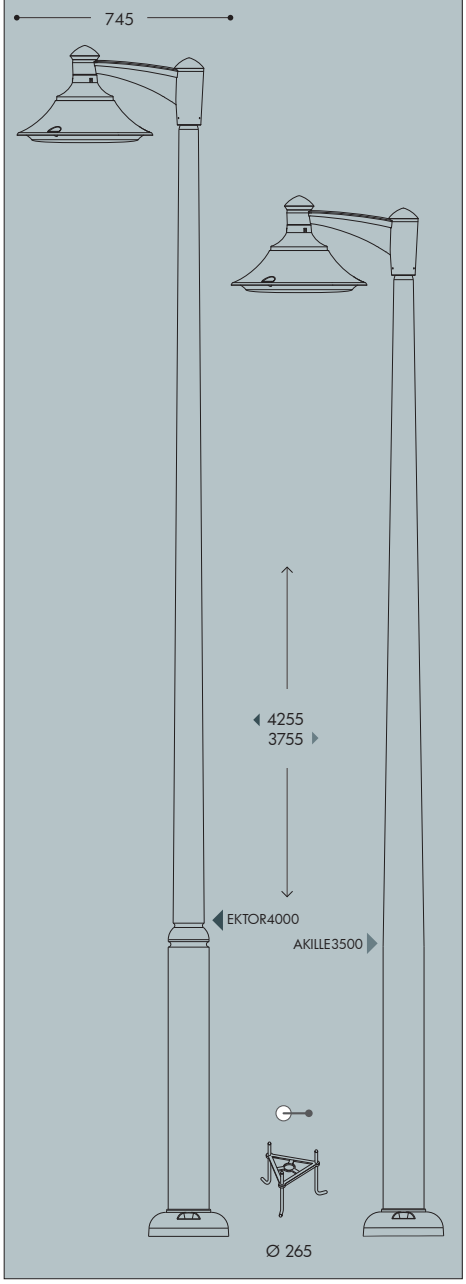

ECOVIVI 400

LARGE SIZE


EV4.421.A30.C6L


EV4.364.A20.D6L

FumaTech® FUMAGALLI POLES TECHNOLOGY


EV4.421.A20.D6L

MADE IN ITALY

EKTOR 2500 MIDIPILAR/ECOVIVI400 3L

EV4.361.A30

Pcs 1
Kg 41
mc 0,497

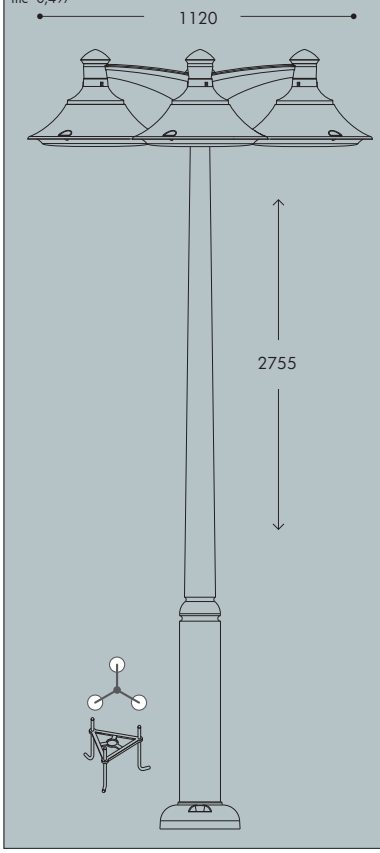

EKTOR 2500 MIDIPILAR/ECOVIVI400 2L

EV4.361.A20

Pcs 1
Kg 35,7
mc 0,306

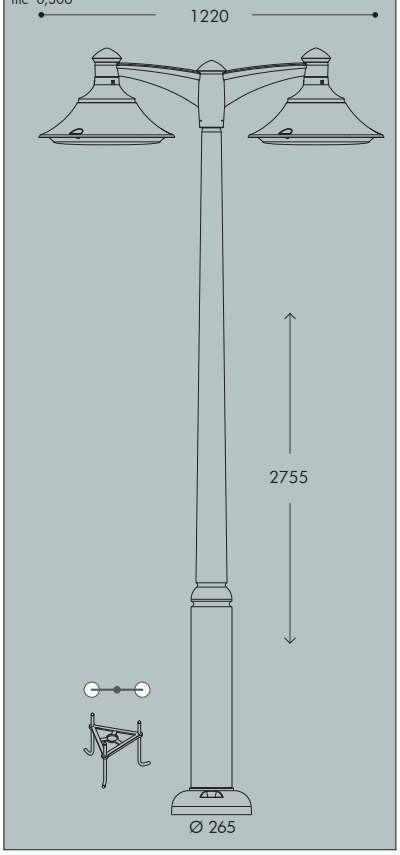

EKTOR 4000 MIDIPILAR/ECOVIVI400 2L	AKILLE 4000 MIDIPILAR/ECOVIVI400 2L
EV4.371.A20	EV4.421.A20

Pcs 1
Kg 46
mc 0,385

EKTOR 3500 MIDIPILAR/ECOVIVI400 2L	AKILLE 3500 MIDIPILAR/ECOVIVI400 2L
EV4.367.A20	EV4.417.A20

Pcs 1
Kg 42,5
mc 0,358

EKTOR 3000 MIDIPILAR/ECOVIVI400 2L	AKILLE 3000 MIDIPILAR/ECOVIVI400 2L
EV4.364.A20	EV4.414.A20

Pcs 1
Kg 39,1
mc 0,332

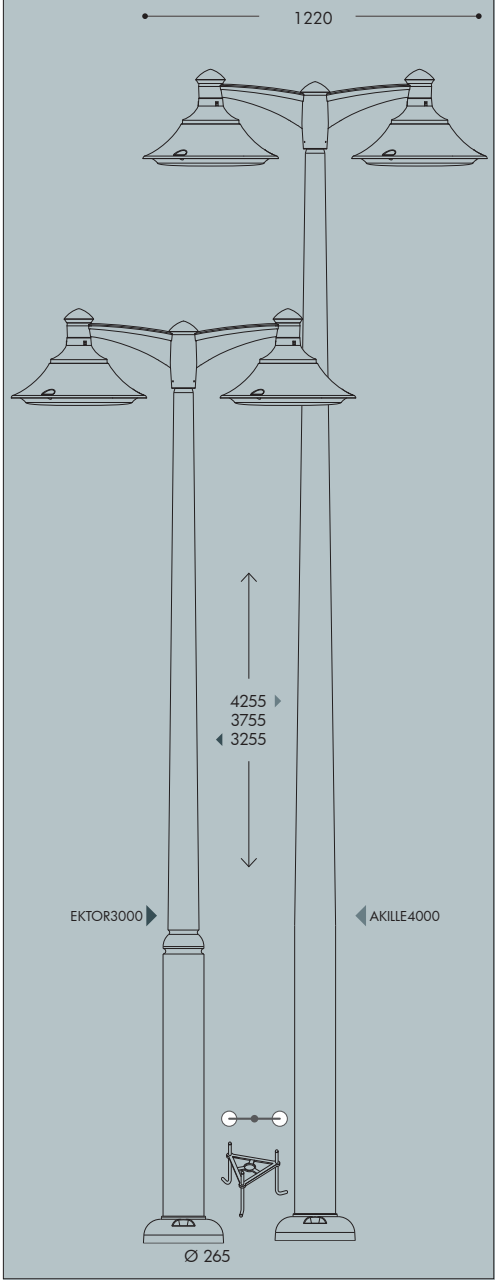

EKTOR 4000 MIDIPILAR/ECOVIVI400 3L	AKILLE 4000 MIDIPILAR/ECOVIVI400 3L
EV4.371.A30	EV4.421.A30

Pcs 1
Kg 51,1
mc 0,576

EKTOR 3500 MIDIPILAR/ECOVIVI400 3L	AKILLE 3500 MIDIPILAR/ECOVIVI400 3L
EV4.367.A30	EV4.417.A30

Pcs 1
Kg 47,7
mc 0,55

EKTOR 3000 MIDIPILAR/ECOVIVI400 3L	AKILLE 3000 MIDIPILAR/ECOVIVI400 3L
EV4.364.A30	EV4.414.A30

Pcs 1
Kg 44,3
mc 0,523

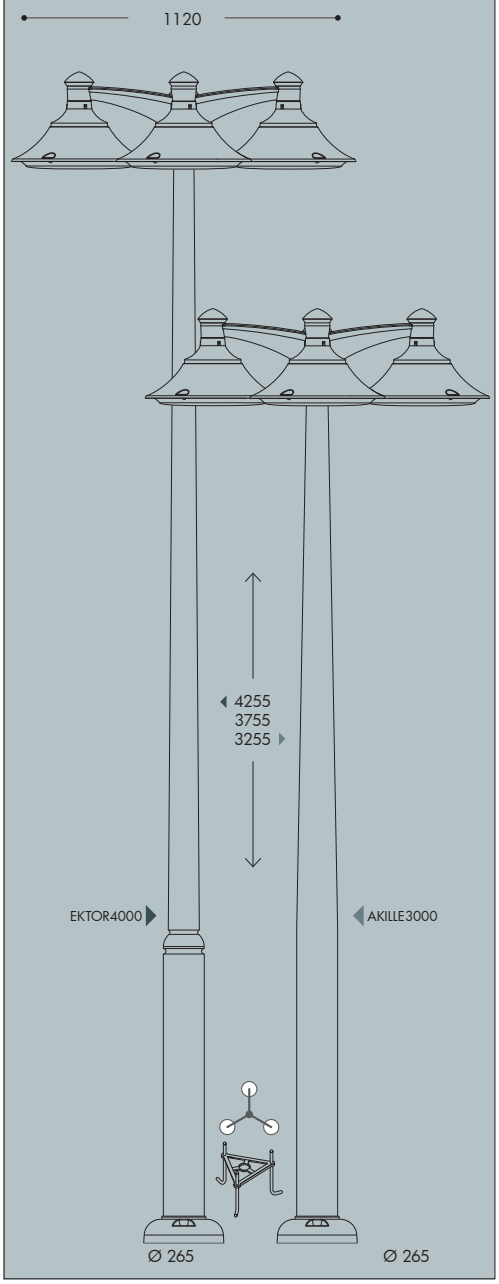

BEPPE 400 HIGH POWER LED

LARGE SIZE

Modern luminaries made in shockproof resin material, UV rays stabilized, rust and corrosion-free. Suitable for post top and wall installation. Provided with reflective ceiling designed to host the lighting source and equipped with TÜV approved, long-life and efficient **E27 high power LED lamp included**. Insulation class II, Protection rating IP65.

*Diffusore moderno realizzato in resina antiurto, stabilizzato ai raggi UV, inattaccabile da ruggine e corrosione. Idoneo per il montaggio a palo e a parete. Provvisto di soffitto riflettente progettato per accogliere la sorgente luminosa e fornito completo di **lampada a LED E27 ad ALTA POTENZA**, approvata TÜV di lunga durata ed elevata efficienza. Classe di isolamento II, grado di protezione IP65.*



P50.000.H1L

E27 HIGH POWER LED

INDOOR & OUTDOOR USE

+80°C -30°

90% HUMIDITY

VOLTAGE SURGE RESISTANT

DRIVER SILICONE PROTECTION



CE UV-TREATED CLASS II DOUBLE INSULATION

RECYCLABLE ANTI-SHOCK +90° -60° TEMPERATURE

PUBLIC

WALL POST HANGING

MADE IN ITALY

BEPPE 400 HIGH POWER LED

LARGE SIZE

BEPPE 400 HIGH POWER LED - COMPONENTS

IP65



ROOF made of shockproof resin material, UV-rays stabilized, rust and corrosion-free.

TETTO *realizzato in resina antiurto, stabilizzata ai raggi UV, inattaccabile da ruggine e corrosione.*

High temperature resistant reflective **CEILING** made of shockproof resin material. Provided with E27 lampholder and equipped with **HIGH POWER LED lamp**. Designed to host and protect the lighting source, granting its safe and quick installation.

SOFFITTO *riflettente realizzato in resina antiurto ad alta resistenza al calore. Fornito completo di portalampada E27 e provvisto di* ***lampada a LED ad ALTA POTENZA****. Progettato per accogliere e proteggere la sorgente luminosa e per garantirne una veloce e sicura installazione.*

DIFFUSER made of UV-rays stabilized polymethylmethacrylate (PMMA), one piece only, available in clear or opal colour.

DIFFUSORE *realizzato in polimetilmetacrilato (PMMA) stabilizzato ai raggi UV, un pezzo unico, disponibile in colore trasparente o opale.*

CAGE for post top installation complete with connection ring (one piece only) to be fixed on the luminaries diffuser.

BIPODE *in un unico pezzo completo di anello di connessione da fissare sul diffusore dell'apparecchio.*

BEPPE 400 HIGH POWER LED

P50.000 *



Dimensions and weight
Height: 420 mm
Diameter: 480 mm
Weight: 4 Kg
Junction to support: Ø 60 mm
Area expose to wind pressure:
CxS = m² 0,1449

Moulded colours:
Black *White* *Grey*

Diffuser PMMA:
Clear *Opal*

HIGH POWER LED



- **COST SAVING:** long-life and efficient LED light source.
- **BUILT-IN DRIVER:** quick and easy lamp replacement
- **GREAT FLEXIBILITY:** E27 standard lamp holder.
- **FUTURE-PROOFED LUMINARIES:** performances easy to upgrade to latest technology developments.
- **SUITABLE FOR OUTDOOR USE:** built-in driver fully protected against heat and humidity by silicone paste.

Luminaries equipped with TÜV approved, long-life and efficient **E27 high power LED lamp**, granting the same luminous flux of traditional SON/HQI lighting sources. The lamp can be quickly and easily replaced, making the luminaries maintenance very simple.

			*ADD. SUFFIX
E27	30 W	3300 Lm	4000 K .Q1L
			3000 K .Q1R
E27	50 W	5000 Lm	4000 K .H1L
			3000 K .H1R

LED LAMPS

More technical details about TÜV approved Fumagalli LED Lamps on page 512.

** ADD THESE SUFFIXES TO THE REFERENCES MENTIONED IN THE CATALOGUE*

PHOTOMETRIC DATA SAMPLE - BEPPE 400 HIGH POWER LED

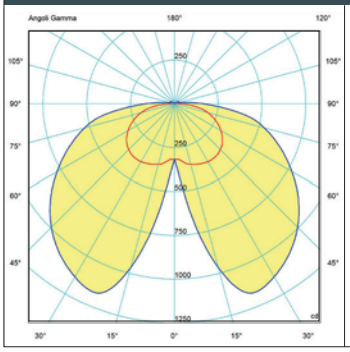

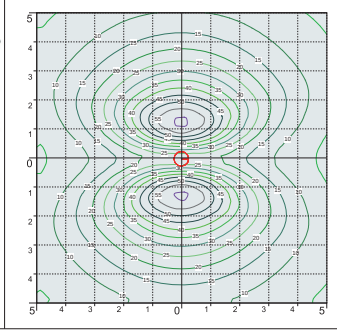

SAVE -40%

HIGH POWER LED 50W (power consumption)

Area: 10x10mt
Height: 3,5mt
21 lux

=

BEPPE 400 E27

HQI 70W 84W (power consumption)

Area: 10x10mt
Height: 3,5mt
21 lux

BEPPE 400 GX53 LED

LARGE SIZE

Modern luminaries made of shockproof resin material, UV-rays stabilized, rust and corrosion-free. Suitable for post top or wall installation. Equipped with TÜV approved, long-life and efficient **GX53 LED modular system** in different wattages. Designed according to the international regulations against light pollution (standard UNI 10819). Insulation class II, Protection rating IP65.

*Diffusore moderno realizzato in resina antiurto, stabilizzato ai raggi UV, inattaccabile da ruggine e corrosione. Idoneo per il montaggio a palo o a parete. Provvisto di **sistema modulare a LED GX53** approvato TÜV di lunga durata ed alta efficienza disponibile in diverse potenze. Progettato in ottemperanza alle norme internazionali contro l'inquinamento luminoso (standard UNI 10819). Classe di isolamento II, grado di protezione IP65.*



P50.000.D6L

CE · UV-TREATED · CLASS II DOUBLE INSULATION · RECYCLABLE · ANTI-SHOCK · +90° -60° TEMPERATURE

PUBLIC · ZONE 2 · WALL · POST · HANGING

MADE IN ITALY

BEPPE 400 GX53 LED - COMPONENTS

IP65



ROOF made of shockproof resin material one piece only, UV-rays stabilized, rust and corrosion-free.

TETTO *in un unico pezzo, realizzato in resina antiurto, stabilizzata ai raggi UV, inattaccabile da ruggine e corrosione.*

DIFFUSER made of UV-rays stabilized polymethylmethacrylate (PMMA), one piece only, available in clear or opal colour.

DIFFUSORE *realizzato in polimetilmetacrilato (PMMA) stabilizzato ai raggi UV, disponibile in colore trasparente o opale.*

Decorative connection **RING** to be fixed on the luminaries diffuser.

ANELLO *decorativo di connessione da fissare sul diffusore dell'apparecchio.*

BEPPE 400 GX53 LED

P50.000 *



Dimensions and weight
Height: 420 mm
Diameter: 480 mm
Weight: 5 Kg
Junction to support: Ø 60 mm
Area expose to wind pressure:
CxS = m^2 0,1449

Moulded colours:
Black *White* *Grey*

Diffuser PMMA:
Clear *Opal*

GX53 LED



- **COST SAVING:** long-life and efficient LED light sources.
- **BUILT-IN DRIVER:** quick and easy lamp replacement
- **GREAT FLEXIBILITY:** GX53 standard lamp holder.
- **FUTURE-PROOFED LUMINARIES:** performances easy to upgrade to latest technology developments.
- **SUITABLE FOR OUTDOOR USE:** built-in driver fully protected against heat and humidity by silicone paste.

Luminaries supplied with white resin CEILING provided with TÜV approved, long-life and efficient **6x GX53 LED lamps included**. Each lamp can be quickly and easily replaced individually, making the luminaries maintenance very simple.



			*ADD. SUFFIX
6x 7W **42W**	**4800 Lm**	4000 K	.C6L
		3000 K	.C6R
6x 10W **60W**	**7200 Lm**	4000 K	.D6L
		3000 K	.D6R

LED LAMPS

More technical details about TÜV approved Fumagalli LED Lamps on page 512.

** ADD THESE SUFFIXES TO THE REFERENCES MENTIONED IN THE CATALOGUE*

PHOTOMETRIC DATA SAMPLE - BEPPE 400 GX53 LED

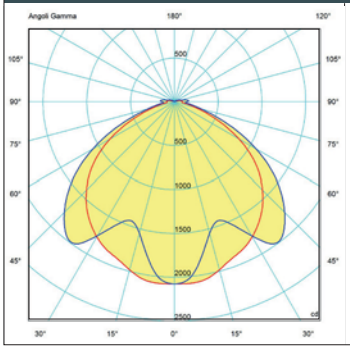

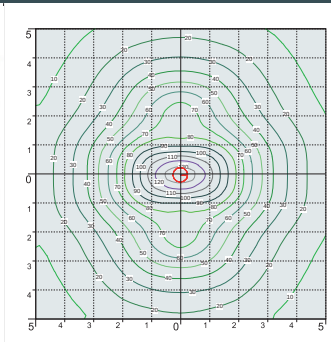



SAVE **-50%**

6x10W GX53 LED
60W
(power consumption)

Area: 10x10mt
Height: 4mt
34 lux

=

BEPPE 400 E27



HQI 100W
112W
(power consumption)

Area: 10x10mt
Height: 4mt
35 lux

BEPPE 400 E27

LARGE SIZE

Modern luminaries made of shockproof resin material, UV-rays stabilized, rust and corrosion-free. Suitable for post top or wall installation. Provided with high temperature resistant ceiling suitable for horizontal bulb fixation and with aluminum reflector to optimize the light distribution. Designed according to the international regulations against light pollution (standard UNI 10819). Insulation class II, Protection rating IP65.

Diffusore moderno realizzato in resina antiurto, stabilizzato ai raggi UV, inattaccabile da ruggine e corrosione. Idoneo per il montaggio a palo o a parete. Fornito con soffitto ad alta resistenza al calore idoneo per il fissaggio orizzontale della lampadina e provvisto di parabola riflettente in alluminio per direzionare il flusso luminoso. Progettato in ottemperanza alle norme internazionali contro l'inquinamento luminoso (standard UNI 10819). Classe di isolamento II, grado di protezione IP65.



V50.000.E27

BEPPE 400 E27 - E40 - COMPONENTS

IP65



ROOF made of shockproof resin material, UV-rays stabilized, rust and corrosion-free.

TETTO *realizzato in resina antiurto, stabilizzata ai raggi UV, inattaccabile da ruggine e corrosione.*

High temperature resistant **CEILING** made of white polycarbonate (PC), UV-rays stabilized, suitable for ballast fixation on its upper side and provided with E27 or E40 lampholder on its lower side. Bulb in horizontal position.

SOFFITTO *realizzato in policarbonato bianco (PC) ad alta resistenza al calore, stabilizzato ai raggi UV, nella cui parte superiore vengono fissati i reattori. Fornito completo di portalampada E27 o E40 atto a sostenere la lampadina in posizione orizzontale.*

Parabolic **REFLECTOR** made of anodized aluminium, designed to optimize the light distribution and to limit the skyward dispersion of the luminous flux.

PARABOLA *riflettente realizzata in alluminio anodizzato, progettata per ottimizzare la distribuzione del flusso luminoso e limitarne la dispersione verso il cielo.*

DIFFUSER made of UV-rays stabilized polymethylmethacrylate (PMMA), one piece only, available in clear or opal colour.

DIFFUSORE *realizzato in polimetilmetacrilato (PMMA) stabilizzato ai raggi UV, un pezzo unico, disponibile in colore trasparente o opale.*

Decorative connection **RING** to be fixed on the luminaries diffuser.

ANELLO *decorativo di connessione da fissare sul diffusore dell'apparecchio.*

BEPPE 400 E27

P50.000 *



Dimensions and weight
Height: 420 mm
Diameter: 480 mm
Weight: 3,7 Kg
Junction to support: Ø 60 mm
Area expose to wind pressure:
CxS = m² 0,1449

Moulded colours:
Black *White* *Grey*

Diffuser PMMA:
Clear *Opal*

E27-E40



Luminaries supplied with E27 or E40 lampholder. Metal plate for ballast fixation available as an option (H.BAL.PLT)

suitable lamps:

CFL-LED
SON-HQI

max 100W

	*ADD. SUFFIX
E27 Lampholder only	.E27
E40 Lampholder only	.E40

HORIZONTAL BULB

AGAINST LIGHT POLLUTION

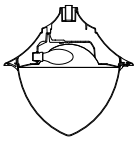

E27 - E40 VERSION

** ADD THESE SUFFIXES TO THE REFERENCES MENTIONED IN THE CATALOGUE*

PHOTOMETRIC DATA SAMPLE

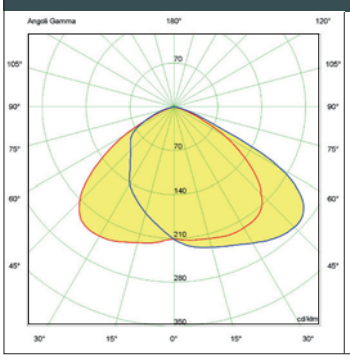

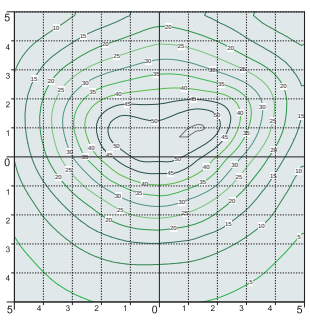

BEPPE 400 *clear HQI 70W.*

POST height 3,5mt
10x10mt area: average 20 lux

The photometric data for all the versions are available upon request or on our website.

BEPPE 400

LARGE SIZE









MADE IN ITALY

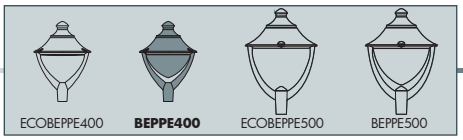

BEPPE 400

LARGE SIZE

MIDIPILAR/BEPPE400

P50.254

Pcs 1
Kg 5,6
mc 0,139

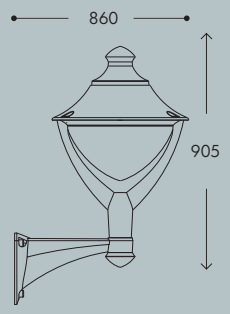

NEW LOT/BEPPE400

P50.115

Pcs 1
Kg 5,3
mc 0,119

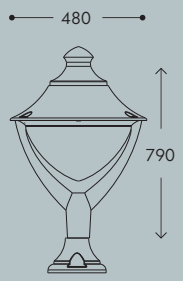

BEPPE400

P50.000

Pcs 1
Kg 5
mc 0,113

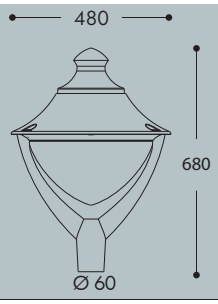

EKTOR 2500/BEPPE400

P50.361.000

Pcs 1
Kg 29,3
mc 0,256

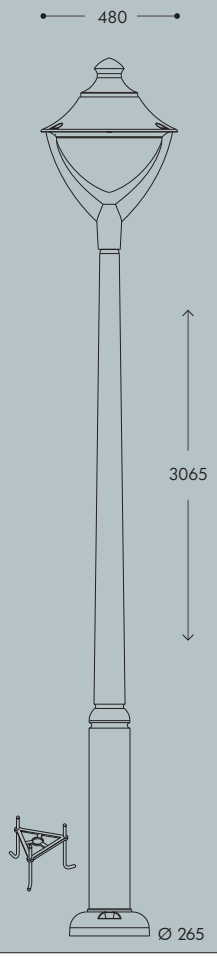

EKTOR 3000/BEPPE400 | AKILLE 3000/BEPPE400

P50.364.000 | P50.414.000

Pcs 1
Kg 32,7
mc 0,282

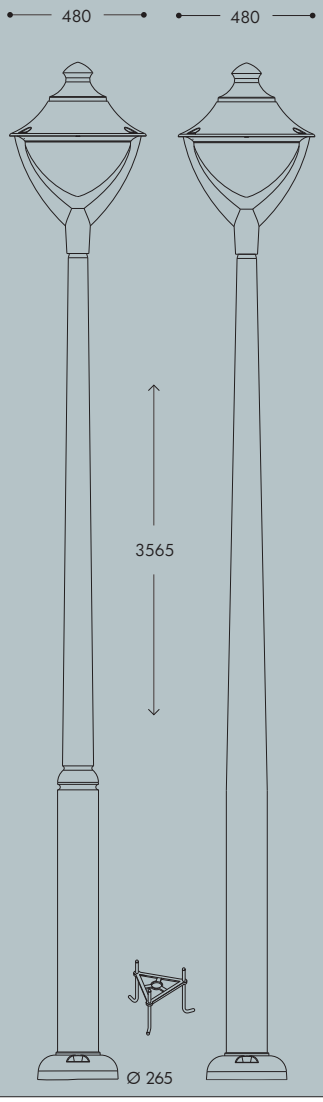

EKTOR 3500/BEPPE400 | AKILLE 3500/BEPPE400

P50.367.000 | P50.417.000

Pcs 1
Kg 36,1
mc 0,309

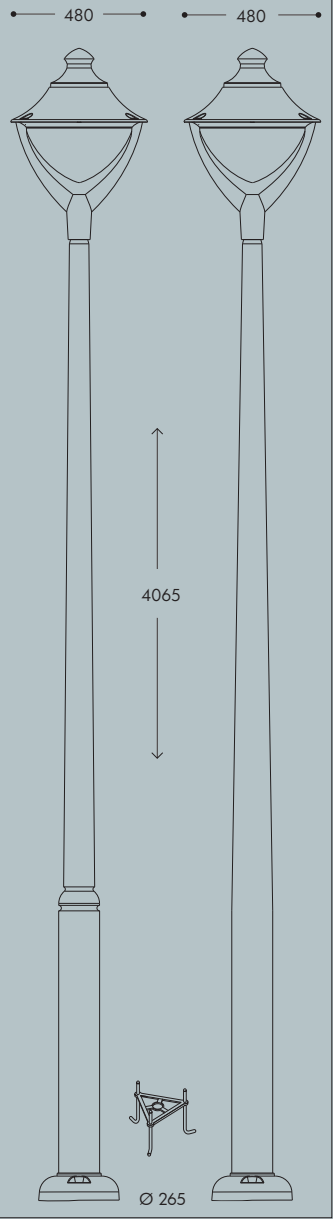

EKTOR 4000/BEPPE400 | AKILLE 4000/BEPPE400

P50.371.000 | P50.421.000

Pcs 1
Kg 39,5
mc 0,335

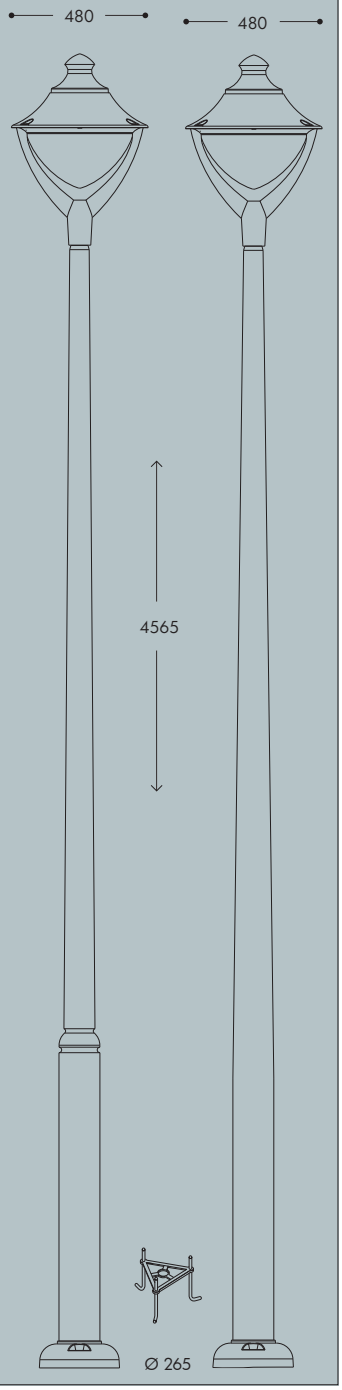

BEPPE 400

LARGE SIZE





MADE IN ITALY

EKTOR 2500 MIDIPILAR/BEPPE400 3L

P50.361.A30

Pcs 1
Kg 42,1
mc 0,595

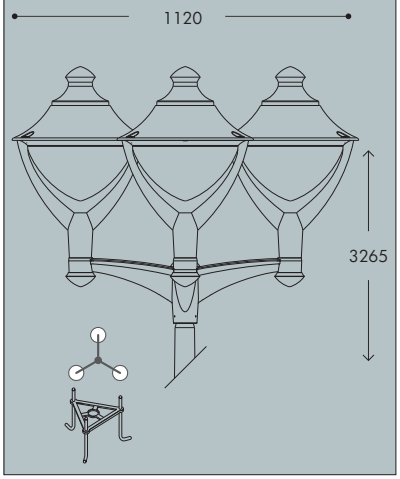

EKTOR 2500 MIDIPILAR/BEPPE400 2L

P50.361.A20

Pcs 1
Kg 36,5
mc 0,399

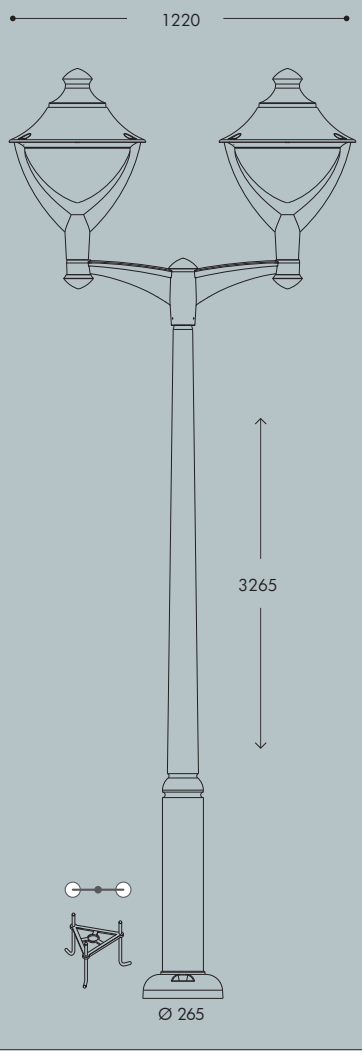

EKTOR 4000 MIDIPILAR/BEPPE400 2L	AKILLE 4000 MIDIPILAR/BEPPE400 2L
P50.371.A20	P50.421A20

Pcs 1
Kg 46,7
mc 0,478

EKTOR 3500 MIDIPILAR/BEPPE400 2L	AKILLE 3500 MIDIPILAR/BEPPE400 2L
P50.367.A20	P50.417.A20

Pcs 1
Kg 43,3
mc 0,452

EKTOR 3000 MIDIPILAR/BEPPE400 2L	AKILLE 3000 MIDIPILAR/BEPPE400 2L
P50.364.A20	P50.414.A20

Pcs 1
Kg 39,9
mc 0,425

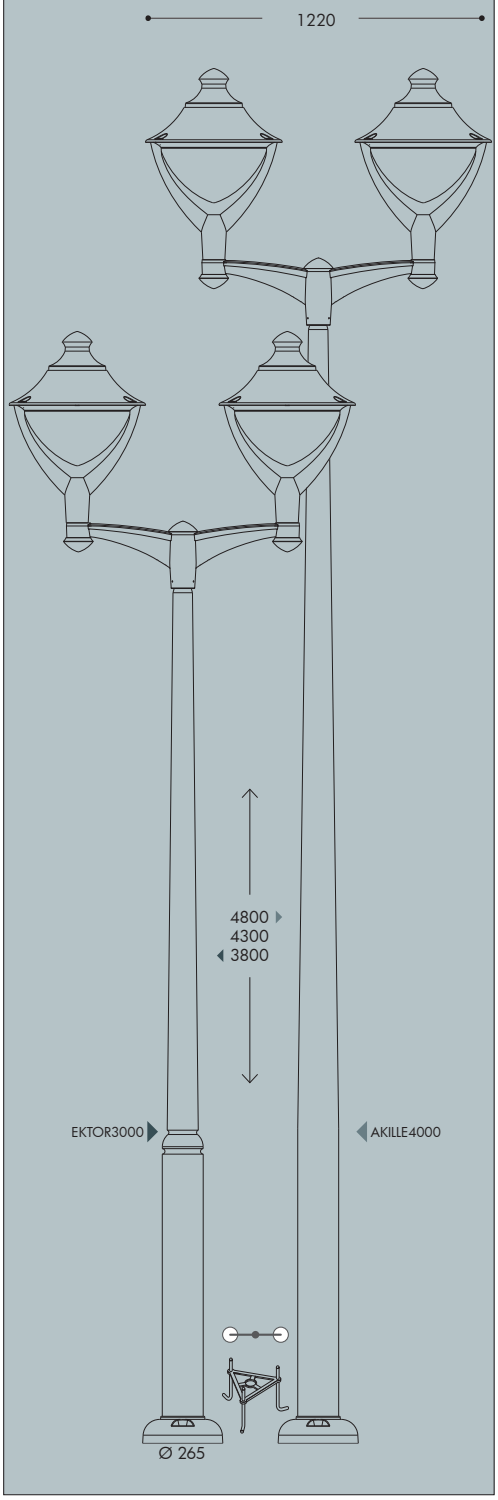

EKTOR 4000 MIDIPILAR/BEPPE400 3L	AKILLE 4000 MIDIPILAR/BEPPE400 3L
P50.371.A30	P50.421.A30

Pcs 1
Kg 52,3
mc 0,674

EKTOR 3500 MIDIPILAR/BEPPE400 3L	AKILLE 3500 MIDIPILAR/BEPPE400 3L
P50.367.A30	P50.417.A30

Pcs 1
Kg 48,9
mc 0,648

EKTOR 3000 MIDIPILAR/BEPPE400 3L	AKILLE 3000 MIDIPILAR/BEPPE400 3L
P50.364.A30	P50.414.A30

Pcs 1
Kg 45,5
mc 0,621

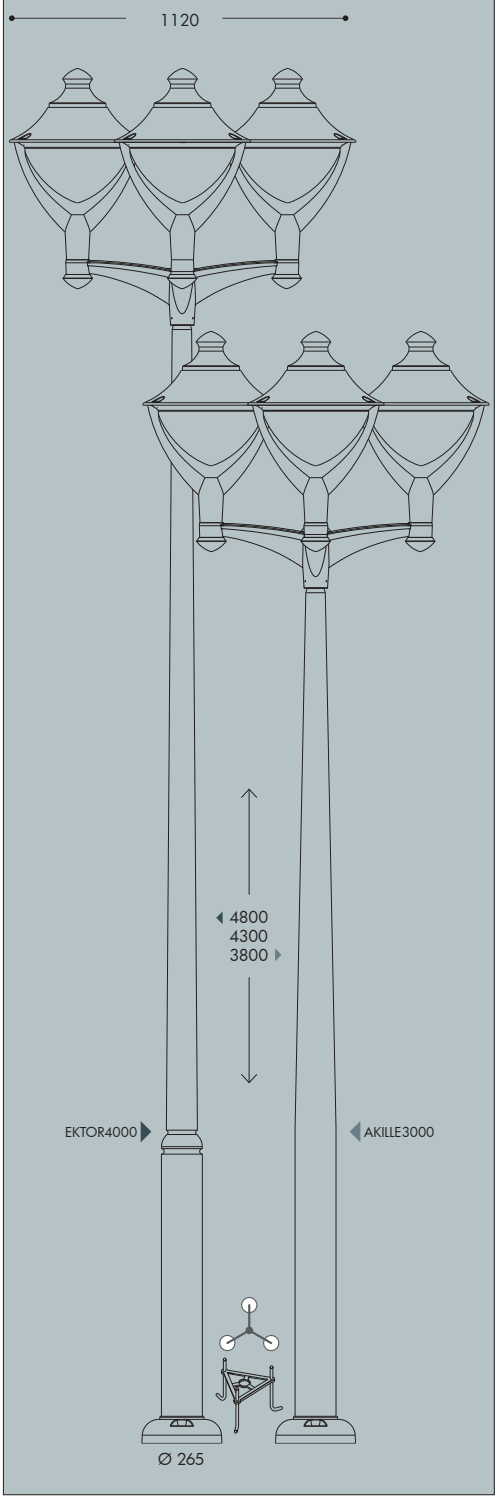

ECOBEPPE 400 GX53 LED

LARGE SIZE

Modern luminaries made in shockproof resin material, UV-rays stabilized, rust and corrosion-free. Suitable for post top or wall installation. Supplied with flat diffuser granting no upward light emission. Equipped with TÜV approved, long-life and efficient **GX53 LED modular system** in different wattages. Designed according to the international regulations against light pollution (standard UNI 10819 – Installation area: Zone 1). Insulation class II, Protection rating IP65.

*Diffusore moderno realizzato in resina antiurto, stabilizzato ai raggi UV, inattaccabile da ruggine e corrosione. Idoneo per il montaggio a palo o a parete. Provvisto di **sistema modulare a LED GX53** approvato TÜV di lunga durata ed alta efficienza disponibile in diverse potenze. Progettato in ottemperanza alle norme internazionali contro l'inquinamento luminoso (standard UNI 10819 – Area di installazione: Zona 1). Classe di isolamento II, grado di protezione IP65.*



EP5.000.D6L

MADE IN ITALY

ECOBEPPE 400 GX53 LED - COMPONENTS

IP65



ROOF made of shockproof resin material one piece only, UV-rays stabilized, rust and corrosion-free.

TETTO *in un unico pezzo, realizzato in resina antiurto, stabilizzata ai raggi UV, inattaccabile da ruggine e corrosione.*

DIFFUSER with flat shape to avoid the skyward dispersion of the luminous flux, according to the international regulations against light pollution and in particular the standard UNI 108119. Made of UV-rays stabilized polycarbonate (PC).

DIFFUSORE *con configurazione piatta per evitare la dispersione verso il cielo del flusso luminoso, in ottemperanza alle norme internazionali sull'inquinamento luminoso ed in particolare la norma UNI 10819. Realizzato in policarbonato (PC) stabilizzato ai raggi UV.*

Decorative connection **RING** to be fixed on the luminaries diffuser.

ANELLO *decorativo di connessione da fissare sul diffusore dell'apparecchio.*

ECOBEPPE 400 GX53 LED

EP5.000 *



Dimensions and weight
Height: 420 mm
Diameter: 480 mm
Weight: 4,7 Kg
Junction to support: Ø 60 mm
Area expose to wind pressure:
CxS = m^2 0,1449

Moulded colours:
Black *White* *Grey*

Diffuser PC (UV treated):
Clear

GX53 LED



- **COST SAVING:** long-life and efficient LED light sources.
- **BUILT-IN DRIVER:** quick and easy lamp replacement
- **GREAT FLEXIBILITY:** GX53 standard lamp holder.
- **FUTURE-PROOFED LUMINARIES:** performances easy to upgrade to latest technology developments.
- **SUITABLE FOR OUTDOOR USE:** built-in driver fully protected against heat and humidity by silicone paste.

Luminaries supplied with white resin CEILING provided with TÜV approved, long-life and efficient **6x GX53 LED lamps included**. Each lamp can be quickly and easily replaced individually, making the luminaries maintenance very simple.



			*ADD. SUFFIX
6x 7W **42W**	**4800 Lm**	4000 K	.C6L
		3000 K	.C6R
6x 10W **60W**	**7200 Lm**	4000 K	.D6L
		3000 K	.D6R

LED LAMPS

More technical details about TÜV approved Fumagalli LED Lamps on page 512.

** ADD THESE SUFFIXES TO THE REFERENCES MENTIONED IN THE CATALOGUE*

PHOTOMETRIC DATA SAMPLE - ECOBEPPE 400 GX53 LED

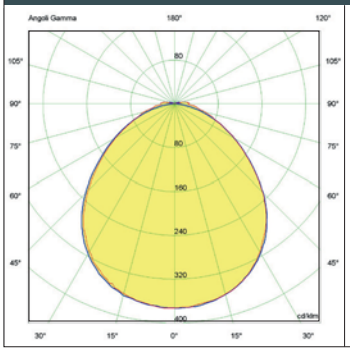

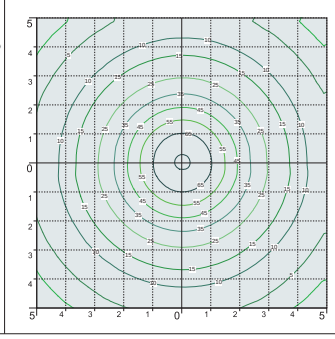

SAVE **-50%**

6x7W GX53 LED 42W *(power consumption)*

Area: 10x10mt
Height: 3,5mt
20 lux

=

ECOBEPPE 400 E27

HQI 70W 84W *(power consumption)*

Area: 10x10mt
Height: 3,5mt
20 lux

ECOBEPPE 400 E27

LARGE SIZE

Modern luminaries made of shockproof resin material, UV-rays stabilized, rust and corrosion-free. Suitable for post top or wall installation. Supplied with flat diffuser granting no upward light emission. Provided with high temperature resistant ceiling suitable for horizontal bulb fixation and with aluminum reflector to optimize the light distribution. Designed according to the international regulations against light pollution (standard UNI 10819 – Intallation area: Zone 1). Insulation class II, Protection rating IP65.

Diffusore moderno realizzato in resina antiurto, stabilizzato ai raggi UV, inattaccabile da ruggine e corrosione. Idoneo per il montaggio a palo o a parete. Fornito con diffusore piatto per garantire assenza di emissioni di luce verso l'alto. Provvisto di soffitto ad alta resistenza al calore idoneo per orizzontale della lampadina e completo di parabola riflettente in alluminio per direzionare il flusso luminoso. Progettato in ottemperanza alle norme internazionali contro l'inquinamento luminoso (standard UNI 10819 – Area di installazione: Zona 1). Classe di isolamento II, grado di protezione IP65.



EP5.000.E27

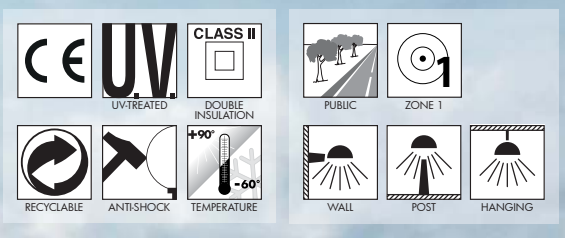

MADE IN ITALY

ECOBEPPE 400 E27 - E40 - COMPONENTS

IP65



ROOF made of shockproof resin material, UV-rays stabilized, rust and corrosion-free.
TETTO *realizzato in resina antiurto, stabilizzata ai raggi UV, inattaccabile da ruggine e corrosione.*

High temperature resistant **CEILING** made of white polycarbonate (PC), UV-rays stabilized, suitable for ballast fixation on its upper side and provided with E27 or E40 lampholder on its lower side. Bulb in horizontal position.

SOFFITTO *realizzato in policarbonato bianco (PC) ad alta resistenza al calore, stabilizzato ai raggi UV, nella cui parte superiore vengono fissati i reattori. Fornito completo di portalampada E27 o E40 atto a sostenere la lampadina in posizione orizzontale.*

Parabolic **REFLECTOR** made of anodized aluminium, designed to optimize the light distribution and to limit the skyward dispersion of the luminous flux.

PARABOLA *riflettente realizzata in alluminio anodizzato, progettata per ottimizzare la distribuzione del flusso luminoso e limitarne la dispersione verso il cielo.*

DIFFUSER with flat shape to avoid the skyward dispersion of the luminous flux, according to the international regulations against light pollution and in particular the standard UNI 108119. Made of UV-rays stabilized polycarbonate (PC).

DIFFUSORE *con configurazione piatta per evitare la dispersione verso il cielo del flusso luminoso, in ottemperanza alle norme internazionali sull'inquinamento luminoso ed in particolare la norma UNI 10819. Realizzato in policarbonato (PC) stabilizzato ai raggi UV.*

Decorative connection **RING** to be fixed on the luminaries diffuser.
ANELLO *decorativo di connessione da fissare sul diffusore dell'apparecchio.*

ECOBEPPE 400 E27

EP5.000 *



Dimensions and weight
Height: 420 mm
Diameter: 480 mm
Weight: 3,4 Kg
Junction to support: Ø 60 mm
Area expose to wind pressure:
CxS = m² 0,1449

Moulded colours:
Black *White* *Grey*
Diffuser PC (UV treated):
Clear

E27-E40



Luminaries supplied with E27 or E40 lampholder. Metal plate for ballast fixation available as an option (H.BAL.PLT)

suitable lamps:

CFL-LED
SON-HQI

max 100W

	*ADD. SUFFIX
E27 Lampholder only	.E27
E40 Lampholder only	.E40

HORIZONTAL BULB

AGAINST LIGHT POLLUTION

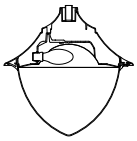

E27 - E40 VERSION

** ADD THESE SUFFIXES TO THE REFERENCES MENTIONED IN THE CATALOGUE*

PHOTOMETRIC DATA SAMPLE

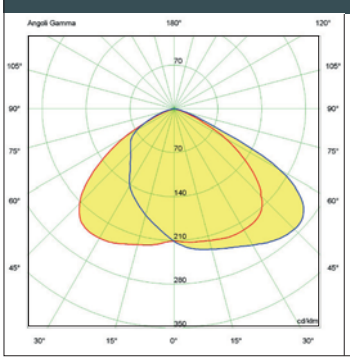

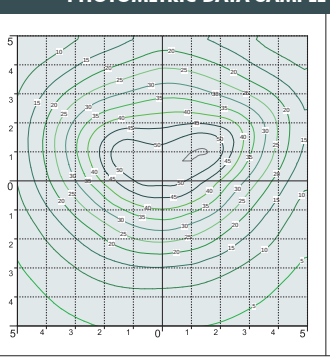

ECOBEPPE 400 *clear HQI 70W.*

POST height 3,5mt
10x10mt area: average 20 lux

The photometric data for all the versions are available upon request or on our website.

ECOBEPPE 400

LARGE SIZE





MADE IN ITALY

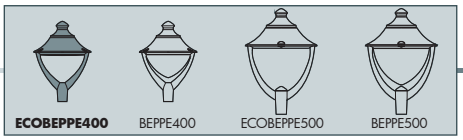

ECOBEPPE 400

LARGE SIZE

MIDIPILAR/ECOBEPPE400

EP5.254

Pcs 1
Kg 5,3
mc 0,139

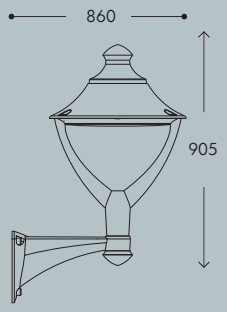

NEW LOT/ECOBEPPE400

EP5.115

Pcs 1
Kg 5
mc 0,119

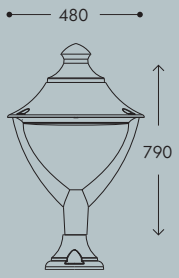

ECOBEPPE400

EP5.000

Pcs 1
Kg 4,7
mc 0,113

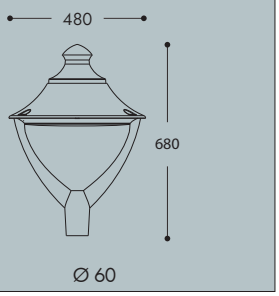

EKTOR 2500/ECOBEPPE400

EP5.361.000

Pcs 1
Kg 29,3
mc 0,256

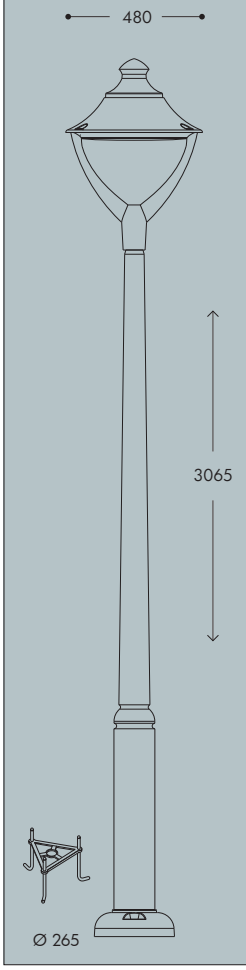

EKTOR 3000/ECOBEPPE400 | AKILLE 3000/ECOBEPPE400

EP5.364.000 | EP5.414.000

Pcs 1
Kg 32,7
mc 0,282

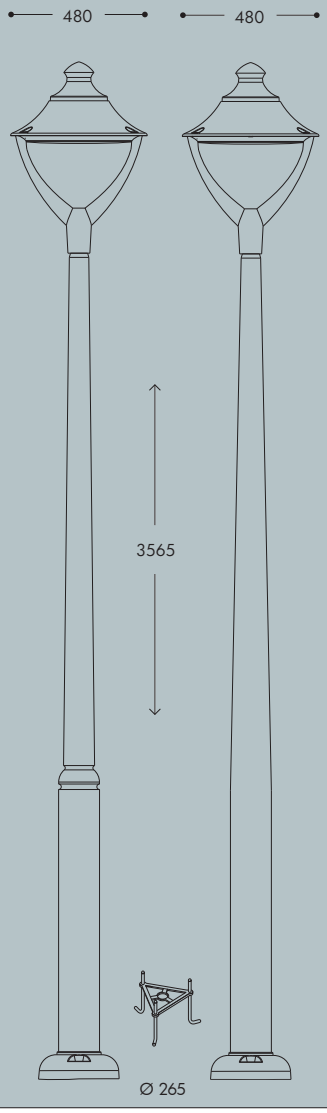

EKTOR 3500/ECOBEPPE400 | AKILLE 3500/ECOBEPPE400

EP5.367.000 | EP5.417.000

Pcs 1
Kg 36,1
mc 0,309

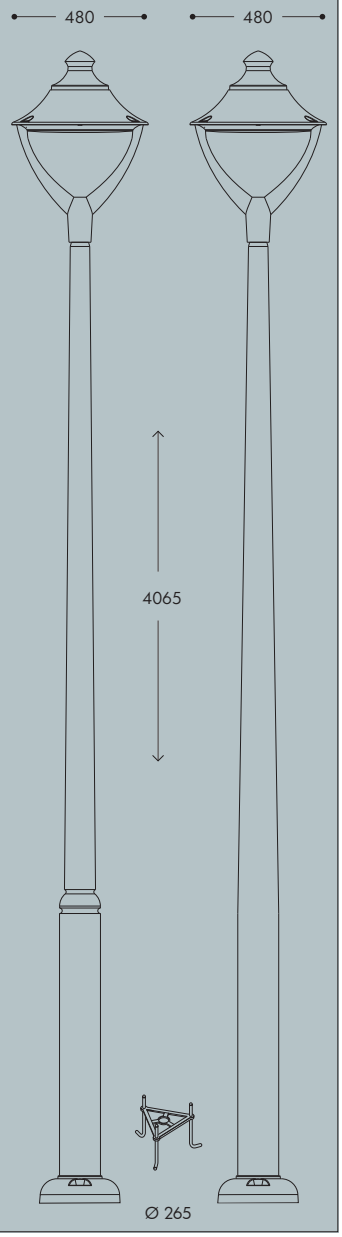

EKTOR 4000/ECOBEPPE400 | AKILLE 4000/ECOBEPPE400

EP5.371.000 | EP5.421.000

Pcs 1
Kg 39,5
mc 0,335

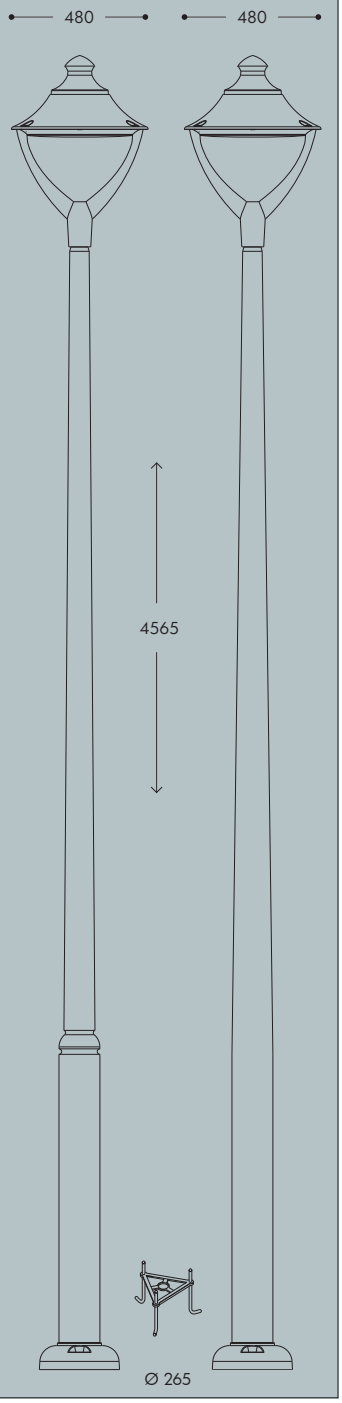

ECOBEPPE 400

LARGE SIZE







MADE IN ITALY

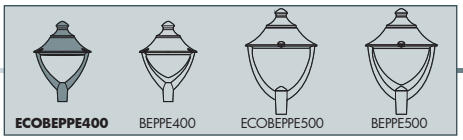

ECOBEPPE 400

LARGE SIZE

EKTOR 2500 MIDIPILAR/ECOBEPPE400 3L

EP5.361.A30

Pcs 1
Kg 41,2
mc 0,595

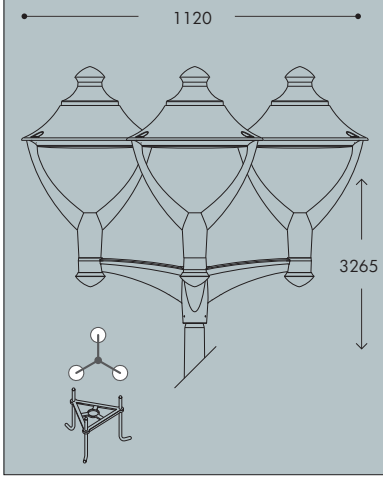

EKTOR 2500 MIDIPILAR/ECOBEPPE400 2L

EP5.361.A20

Pcs 1
Kg 35,9
mc 0,399

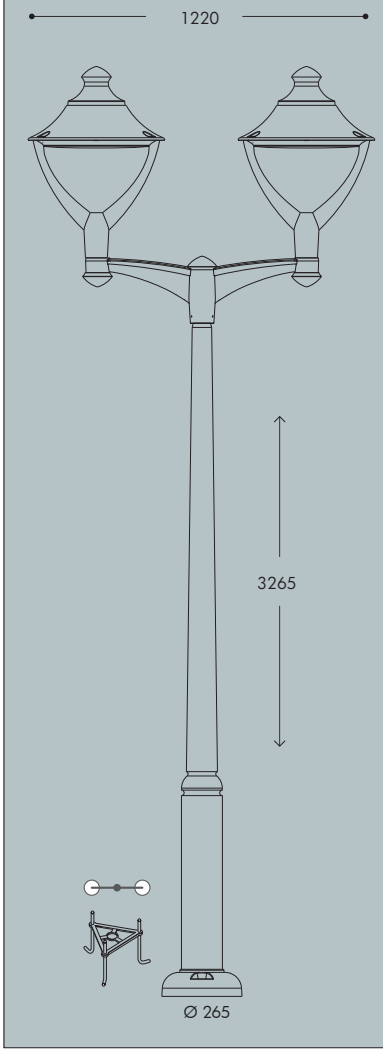

EKTOR 4000 MIDIPILAR/ECOBEPPE400 2L	AKILLE 4000 MIDIPILAR/ECOBEPPE400 2L
EP5.371.A20	EP5.421A20

Pcs 1
Kg 46,1
mc 0,478

EKTOR 3500 MIDIPILAR/ECOBEPPE400 2L	AKILLE 3500 MIDIPILAR/ECOBEPPE400 2L
EP5.367.A20	EP5.417.A20

Pcs 1
Kg 42,7
mc 0,452

EKTOR 3000 MIDIPILAR/ECOBEPPE400 2L	AKILLE 3000 MIDIPILAR/ECOBEPPE400 2L
EP5.364.A20	EP5.414.A20

Pcs 1
Kg 39,3
mc 0,425

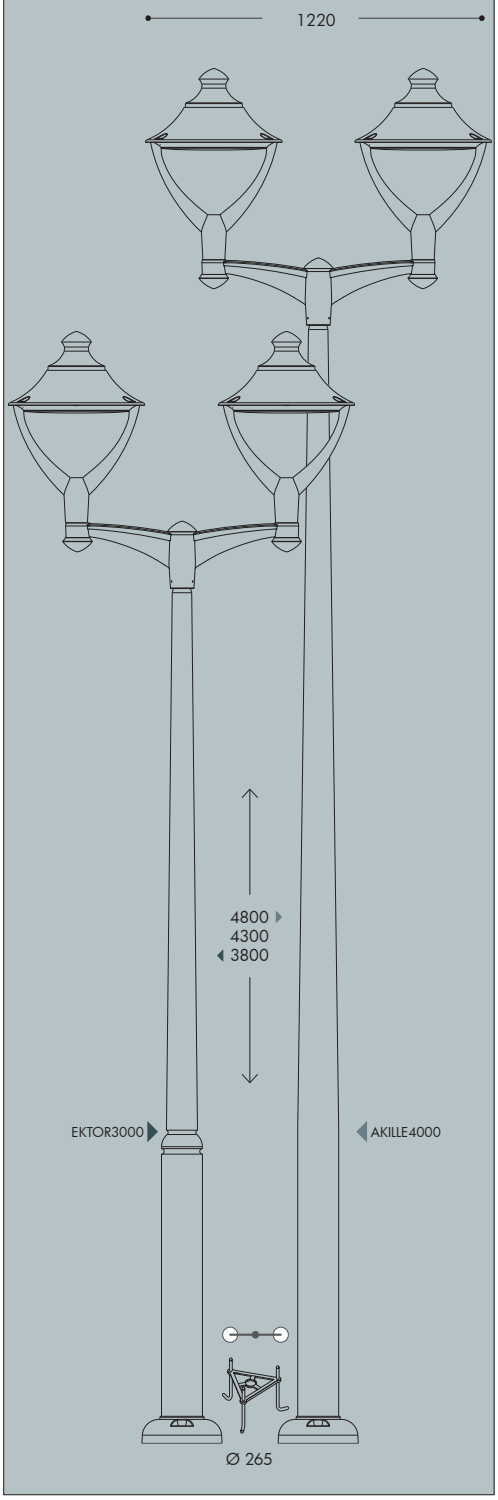

EKTOR 4000 MIDIPILAR/ECOBEPPE400 3L	AKILLE 4000 MIDIPILAR/ECOBEPPE400 3L
EP5.371.A30	EP5.421.A30

Pcs 1
Kg 51,4
mc 0,674

EKTOR 3500 MIDIPILAR/ECOBEPPE400 3L	AKILLE 3500 MIDIPILAR/ECOBEPPE400 3L
EP5.367.A30	EP5.417.A30

Pcs 1
Kg 48
mc 0,648

EKTOR 3000 MIDIPILAR/ECOBEPPE400 3L	AKILLE 3000 MIDIPILAR/ECOBEPPE400 3L
EP5.364.A30	EP5.414.A30

Pcs 1
Kg 44,6
mc 0,621

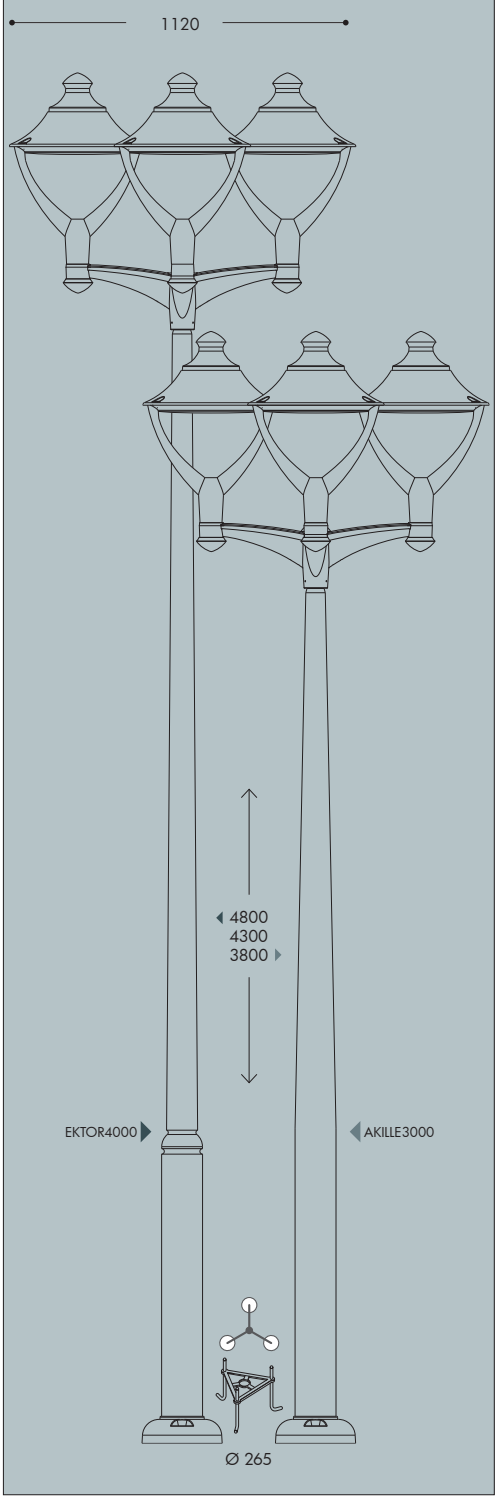

REMO 400 GX53 LED

LARGE SIZE

Modern luminaries made of shockproof resin material, UV-rays stabilized, rust and corrosion-free. Suitable for post top or wall installation. Equipped with TÜV approved, long-life and efficient **GX53 LED modular system** in different wattages. Insulation class II, Protection rating IP65.

*Diffusore moderno realizzato in resina antiurto, stabilizzato ai raggi UV, inattaccabile da ruggine e corrosione. Idoneo per il montaggio a palo o a parete. Provvisto di **sistema modulare a LED GX53** approvato TÜV di lunga durata ed alta efficienza disponibile in diverse potenze. Classe di isolamento II, grado di protezione IP65.*



REMO 400 GX53 LED - COMPONENTS

IP65



ROOF complete with decorative pinnacle made in shockproof resin material, UV-rays stabilized, rust and corrosion-free.

TETTO *completo di pinnacolo decorativo, realizzato in resina antiurto, stabilizzato ai raggi UV, inattaccabile da ruggine e corrosione.*

DIFFUSER made of UV-rays stabilized polymethylmethacrylate (PMMA), one piece only, available in clear or opal colour.

DIFFUSORE *realizzato in polimetilmetacrilato (PMMA) stabilizzato ai raggi UV, un pezzo unico, disponibile in colore trasparente o opale.*

Decorative connection **RING** to be fixed on the luminaries diffuser.

ANELLO *decorativo di connessione da fissare sul diffusore dell'apparecchio.*

BASE made in shockproof resin material consisting of a support for post top installation (Ø 60mm) and of a white resin **CONE REFLECTOR**, to direct downwards the lighting output. A silicone rubber gasket assures the protection against external agents.

BASE *dell'apparecchio realizzata in resina antiurto composta da un supporto per permettere il fissaggio dell'apparecchio a palo (Ø 60mm) e da un* ***CONO*** *riflettente in resina bianca per indirizzare verso il basso il flusso luminoso. Una guarnizione in gomma siliconica garantisce la protezione dagli agenti esterni.*

REMO 400 GX53 LED

R50.000 *



Dimensions and weight
Height: 715 mm
Diameter: 480 mm
Weight: 5,8 Kg
Junction to support: diameter 60 mm
Area expose to wind pressure:
CxS = m^2 0,157

Moulded colours:
Black *White* *Grey*

Diffuser PMMA:
Clear *Opal*

GX53 LED



- **COST SAVING:** long-life and efficient LED light sources.
- **BUILT-IN DRIVER:** quick and easy lamp replacement
- **GREAT FLEXIBILITY:** GX53 standard lamp holder.
- **FUTURE-PROOFED LUMINARIES:** performances easy to upgrade to latest technology developments.
- **SUITABLE FOR OUTDOOR USE:** built-in driver fully protected against heat and humidity by silicone paste.

Luminaries supplied with white resin CEILING provided with TÜV approved, long-life and efficient **6x GX53 LED lamps included**. Each lamp can be quickly and easily replaced individually, making the luminaries maintenance very simple.



			*ADD. SUFFIX
6x 7W **42W**	**4800 Lm**	4000 K	.C6L
		3000 K	.C6R
6x 10W **60W**	**7200 Lm**	4000 K	.D6L
		3000 K	.D6R

LED LAMPS

More technical details about TÜV approved Fumagalli LED Lamps on page 512.

** ADD THESE SUFFIXES TO THE REFERENCES MENTIONED IN THE CATALOGUE*

PHOTOMETRIC DATA SAMPLE - REMO 400 GX53 LED

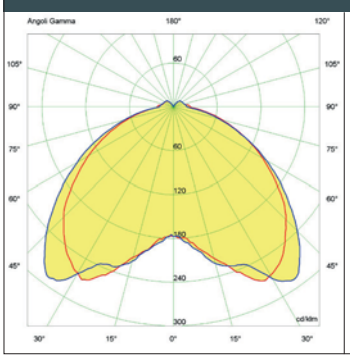

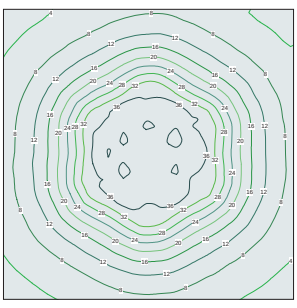

SAVE **-63%**

6x7W GX53 LED
42W
(power consumption)

Area: 10x10mt
Height: 3,5mt
17 lux

=

REMO 400 E40

HQI 100W
115W
(power consumption)

Area: 10x10mt
Height: 3,5mt
15 lux

REMO 400 E27

LARGE SIZE

Modern luminaries made of shockproof resin material, UV-rays stabilized, rust and corrosion-free. Suitable for post top or wall installation. Provided with aluminum reflector to optimize the light distribution. Base equipped with E27 or E40 lampholder and prepared for louvre fixation. Insulation class II, Protection rating IP65.

Diffusore moderno realizzato in resina antiurto, stabilizzato ai raggi UV, inattaccabile da ruggine e corrosione. Idoneo per il montaggio a palo o a parete. Provvisto di parabola riflettente in alluminio per direzionare il flusso luminoso. Base con portalampada E27 o E40 predisposta per il fissaggio del frangiluce. Idoneo per il montaggio a palo e a parete. Classe di isolamento II, grado di protezione IP65.

R50.000.E27FC6

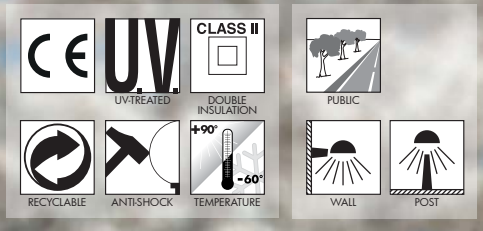

MADE IN ITALY

REMO 400 E27 - E40 - COMPONENTS

IP65



ROOF complete with decorative pinnacle made in shockproof resin material, UV-rays stabilized, rust and corrosion-free.

TETTO *completo di pinnacolo decorativo, realizzato in resina antiurto, stabilizzato ai raggi UV, inattaccabile da ruggine e corrosione.*

Parabolic **REFLECTOR** made of anodized aluminium and fixed under the luminaries roof, designed to optimize the light efficiency performance and to allow a uniform light distribution.

PARABOLA *riflettente realizzata in alluminio anodizzato, fissata sotto il tetto del diffusore, progettata per ottimizzare il rendimento luminoso e permettere una uniforme distribuzione della luce.*

DIFFUSER made of UV-rays stabilized polymethylmethacrylate (PMMA), one piece only, available in clear or opal colour.

DIFFUSORE *realizzato in polimetilmetacrilato (PMMA) stabilizzato ai raggi UV, un pezzo unico, disponibile in colore trasparente o opale.*



Chrome aluminium **LOUVRE** with a laminar symmetrical optic system to direct the lighting output and to get a lower dazzle (optional).

FRANGILUCE *in alluminio cromato con sistema ottico lamellare a ripartizione simmetrica per orientare il fascio di luce e ridurre l'abbagliamento (opzionale).*

Resin **BASE** consisting of a support (Ø 60mm) and of a cover suitable for ballast fixation on its lower side and provided with E27 or E40 lampholder on its upper side. A rubber gasket assures the protection of the electrical accessories seat against external agents.

BASE *in resina composta da un supporto e da un coperchio nella cui parte inferiore possono essere fissati i reattori e nella cui parte superiore si trova l'alloggiamento per il portalampada E27 o E40 (incluso). Una guarnizione in gomma garantisce la protezione dell'alloggiamento degli accessori elettrici dagli agenti esterni.*

REMO 400 E27

R50.000 *



Dimensions and weight
Height: 715 mm
Diameter: 480 mm
Weight: 4,2 Kg
Junction to support: diameter 60 mm
Area expose to wind pressure:
CxS = m² 0,157

Moulded colours:
Black *White* *Grey*

Diffuser PMMA:
Clear *Opal*

CHROME ALUMINIUM LOUVRE

H.FC6 open
Upward position



E27-E40

		*ADD. SUFFIX
 Luminaries supplied with E27 or E40 lampholder. Metal plate for ballast fixation available as an option (H.BAL.PLT)	suitable lamps: CFL-LED SON-HQI max 100W	**E27** Lampholder only	.E27
		E40 Lampholder only	.E40

** ADD THESE SUFFIXES TO THE REFERENCES MENTIONED IN THE CATALOGUE*

PHOTOMETRIC DATA SAMPLE

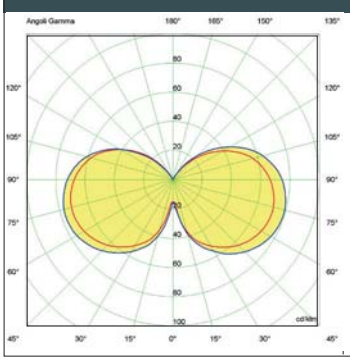

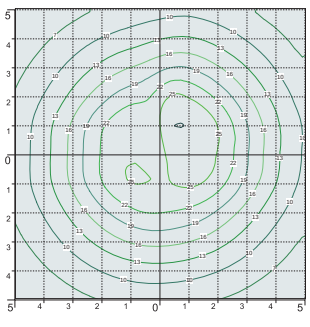

REMO 400 *clear HQI 100W.*

POST height 3,5mt
10x10mt area: average 15 lux

The photometric data for all the versions are available upon request or on our website.

REMO 400

LARGE SIZE







MADE IN ITALY

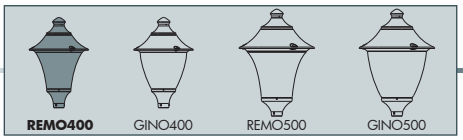

MIDIPILAR/REMO400

R50.254

Pcs 1
Kg 6,4
mc 0,09

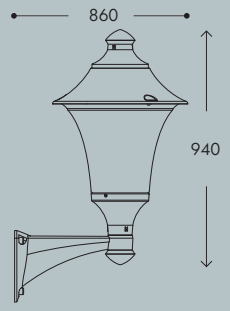

NEW LOT/REMO400

R50.115

Pcs 1
Kg 6,1
mc 0,07

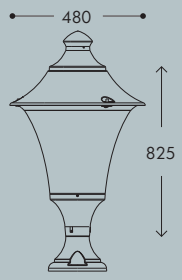

REMO400

R50.000

Pcs 1
Kg 5,8
mc 0,06

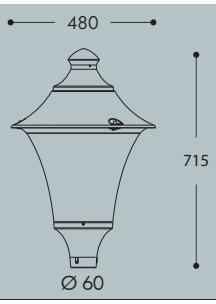

EKTOR 2500/REMO400

R50.361.000

Pcs 1
Kg 30,1
mc 0,21

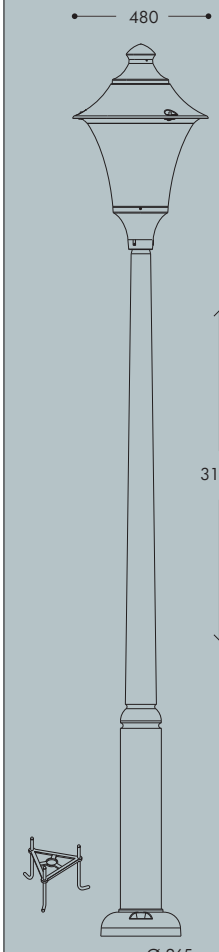

EKTOR 3000/REMO400 | AKILLE 3000/REMO400

R50.364.000 | R50.414.000

Pcs 1
Kg 33,5
mc 0,241

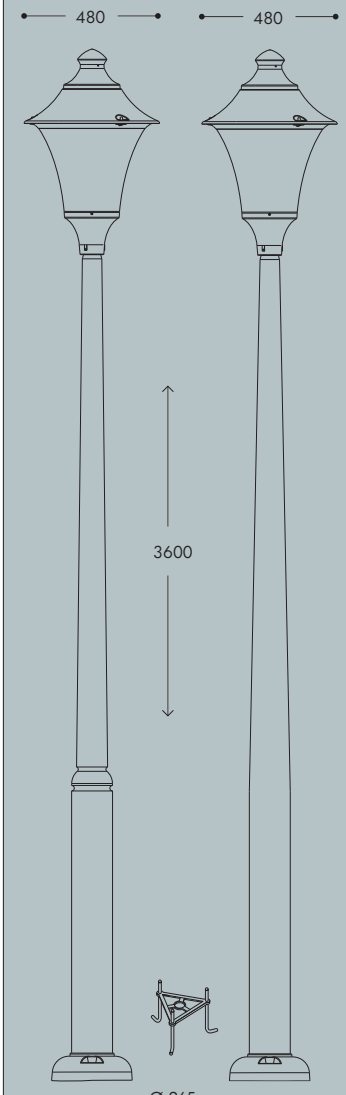

EKTOR 3500/REMO400 | AKILLE 3500/REMO400

R50.367.000 | R50.417.000

Pcs 1
Kg 26,9
mc 0,268

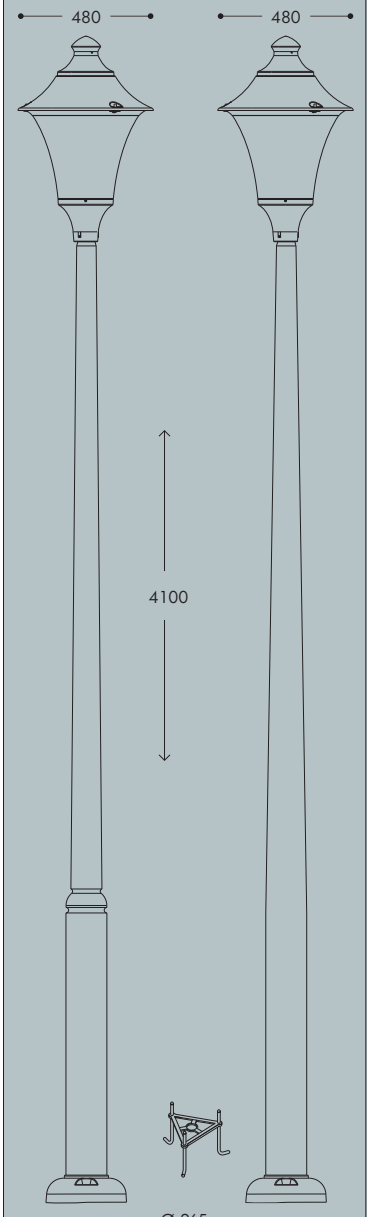

EKTOR 4000/REMO400 | AKILLE 4000/REMO400

R50.371.000 | R50.421.000

Pcs 1
Kg 40,3
mc 0,294

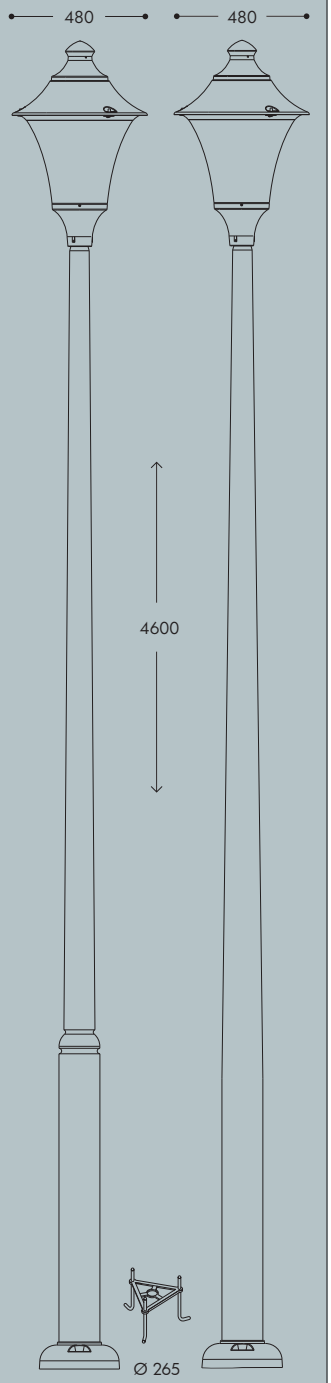

REMO 400

LARGE SIZE





MADE IN ITALY

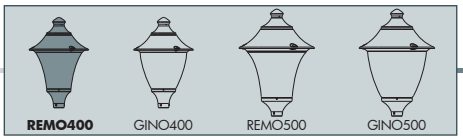

REMO 400

LARGE SIZE

EKTOR 2500 MIDIPILAR/REMO400 3L

R50.361.A30

Pcs 1
Kg 44,5
mc 0,515

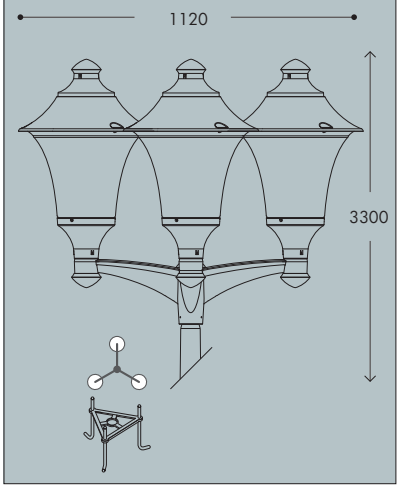

EKTOR 2500 MIDIPILAR/REMO400 2L

R50.361.A20

Pcs 1
Kg 38,4
mc 0,318

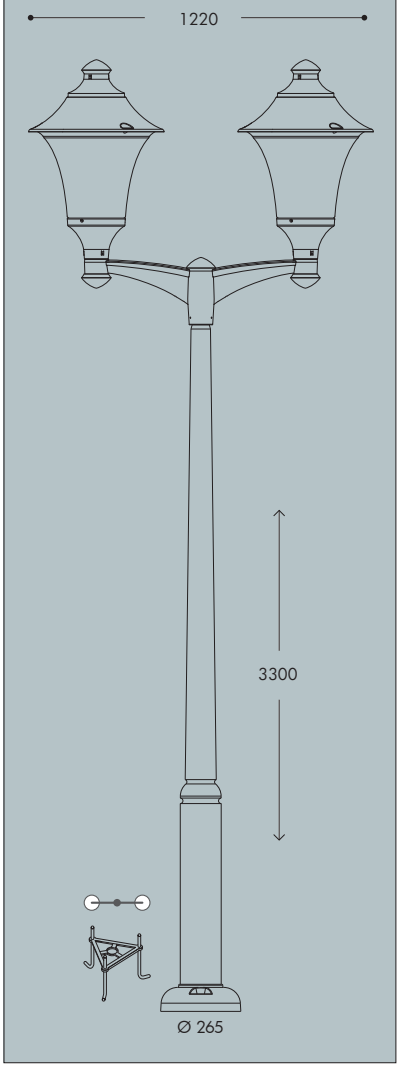

EKTOR 4000 MIDIPILAR/REMO400 2L	AKILLE 4000 MIDIPILAR/REMO400 2L
R50.371.A20	R50.421A20

Pcs 1
Kg 48,3
mc 0,397

EKTOR 3500 MIDIPILAR/REMO400 2L	AKILLE 3500 MIDIPILAR/REMO400 2L
R50.367.A20	R50.417.A20

Pcs 1
Kg 44,9
mc 0,37

EKTOR 3000 MIDIPILAR/REMO400 2L	AKILLE 3000 MIDIPILAR/REMO400 2L
R50.364.A20	R50.414.A20

Pcs 1
Kg 41,5
mc 0,344

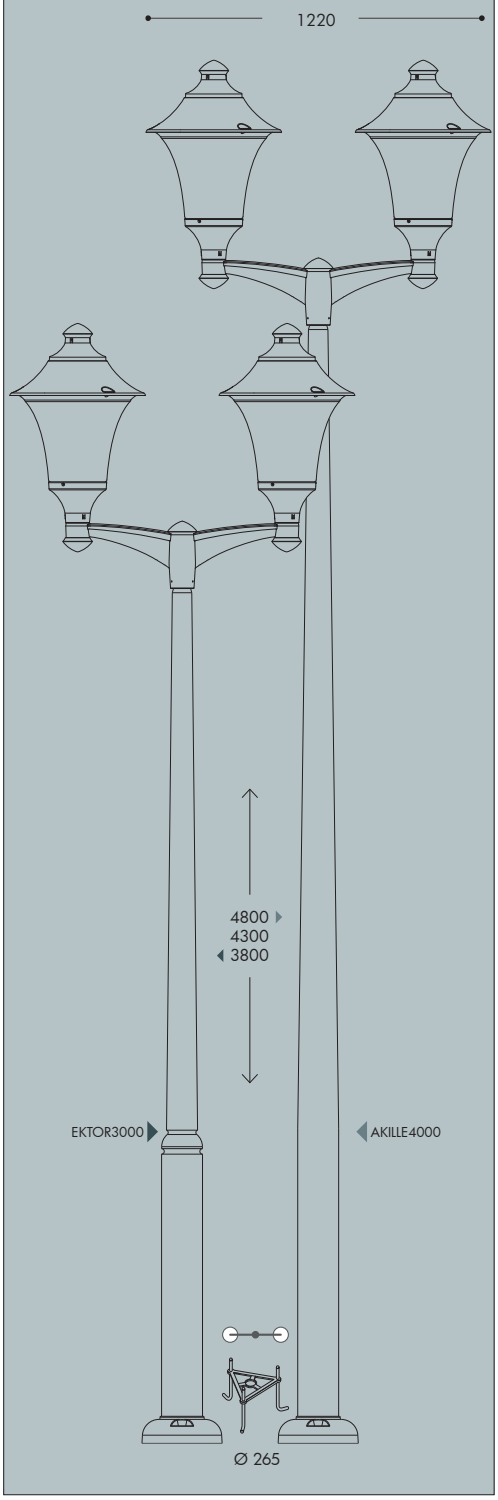

EKTOR 4000 MIDIPILAR/REMO400 3L	AKILLE 4000 MIDIPILAR/REMO400 3L
R50.371.A30	R50.421.A30

Pcs 1
Kg 54,7
mc 0,594

EKTOR 3500 MIDIPILAR/REMO400 3L	AKILLE 3500 MIDIPILAR/REMO400 3L
R50.367.A30	R50.417.A30

Pcs 1
Kg 51,3
mc 0,568

EKTOR 3000 MIDIPILAR/REMO400 3L	AKILLE 3000 MIDIPILAR/REMO400 3L
R50.364.A30	R50.414.A30

Pcs 1
Kg 47,9
mc 0,541

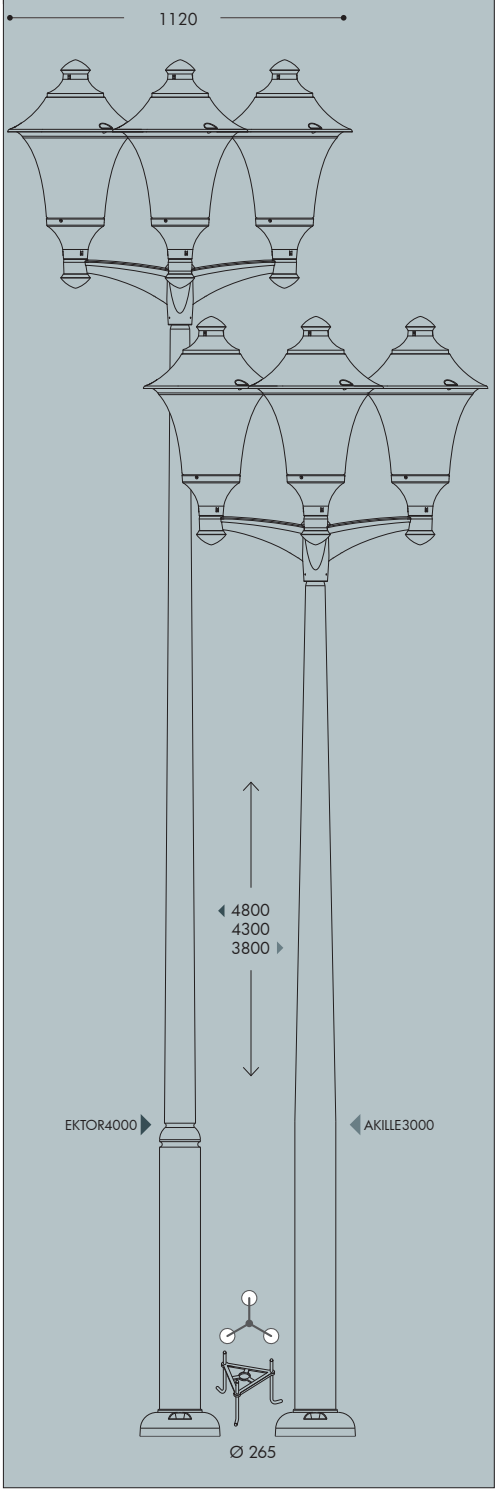

GINO 400 GX53 LED

LARGE SIZE

Modern luminaries made of shockproof resin material, UV-rays stabilized, rust and corrosion-free. Suitable for post top or wall installation. Equipped with TÜV approved, long-life and efficient **GX53 LED modular system** in different wattages. Insulation class II, Protection rating IP65.

*Diffusore moderno realizzato in resina antiurto, stabilizzato ai raggi UV, inattaccabile da ruggine e corrosione. Idoneo per il montaggio a palo o a parete. Provvisto di **sistema modulare a LED GX53** approvato TÜV di lunga durata ed alta efficienza disponibile in diverse potenze. Classe di isolamento II, grado di protezione IP65.*

F50.000.D6L

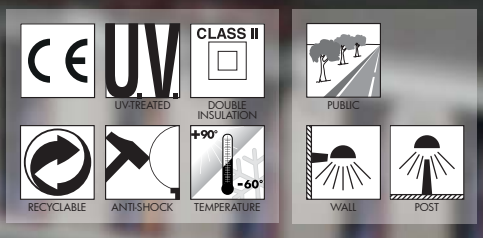

MADE IN ITALY

GINO 400 GX53 LED

LARGE SIZE

GINO 400 GX53 LED - COMPONENTS

IP65



ROOF complete with decorative pinnacle made of shockproof resin material, UV-rays stabilized, rust and corrosion-free.

TETTO *completo di pinnacolo decorativo, realizzato in resina antiurto, stabilizzata ai raggi UV, inattaccabile da ruggine e corrosione.*

DIFFUSER made of UV-rays stabilized polymethylmethacrylate (PMMA), one piece only, available in clear or opal colour.

DIFFUSORE *realizzato in polimetilmetacrilato (PMMA) stabilizzato ai raggi UV, disponibile in colore trasparente o opale.*

Decorative connection **RING** to be fixed on the luminaries diffuser.

ANELLO *decorativo di connessione da fissare sul diffusore dell'apparecchio.*

BASE made in shockproof resin material consisting of a support for post top installation (Ø 60mm) and of a white resin **CONE REFLECTOR**, to direct downwards the lighting output. A silicone rubber gasket assures the protection against external agents.

BASE *dell'apparecchio realizzata in resina antiurto composta da un supporto per permettere il fissaggio dell'apparecchio a palo (Ø 60mm) e da un* ***CONO*** *riflettente in resina bianca per indirizzare verso il basso il flusso luminoso. Una guarnizione in gomma siliconica garantisce la protezione dagli agenti esterni.*

GINO 400 GX53 LED

F50.000 *



Dimensions and weight
Height: 715 mm
Diameter: 480 mm
Weight: 5,8 Kg
Junction to support: diameter 60 mm
Area expose to wind pressure:
CxS = m² 0,157

Moulded colours:
Black *White* *Grey*

Diffuser PMMA:
Clear *Opal*

GX53 LED



- **COST SAVING:** long-life and efficient LED light sources.
- **BUILT-IN DRIVER:** quick and easy lamp replacement
- **GREAT FLEXIBILITY:** GX53 standard lamp holder.
- **FUTURE-PROOFED LUMINARIES:** performances easy to upgrade to latest technology developments.
- **SUITABLE FOR OUTDOOR USE:** built-in driver fully protected against heat and humidity by silicone paste.

Luminaries supplied with white resin CEILING provided with TÜV approved, long-life and efficient **6x GX53 LED lamps included**. Each lamp can be quickly and easily replaced individually, making the luminaries maintenance very simple.



		*ADD. SUFFIX
6x 7W **42W**	**4800 Lm**	4000 K .C6L
		3000 K .C6R
6x 10W **60W**	**7200 Lm**	4000 K .D6L
		3000 K .D6R

** ADD THESE SUFFIXES TO THE REFERENCES MENTIONED IN THE CATALOGUE*

LED LAMPS

More technical details about TÜV approved Fumagalli LED Lamps on page 512.

PHOTOMETRIC DATA SAMPLE - GINO 400 GX53 LED

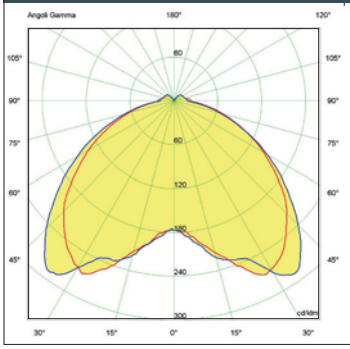

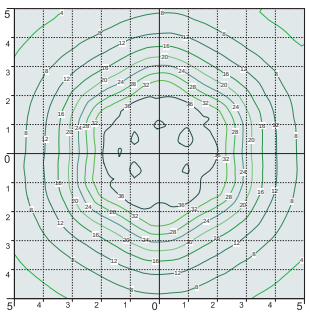

SAVE -63%

6x7W GX53 LED
42W
(power consumption)

Area: 10x10mt
Height: 3,5mt
17 lux

=

GINO 400 E40

HQI 100W
115W
(power consumption)

Area: 10x10mt
Height: 3,5mt
15 lux

GINO 400 E27

LARGE SIZE

Modern luminaries made of shockproof resin material, UV-rays stabilized, rust and corrosion-free. Suitable for post top or wall installation. Provided with aluminum reflector to optimize the light distribution. Base equipped with E27 or E40 lampholder and prepared for louvre fixation. Insulation class II, Protection rating IP65.

Diffusore moderno realizzato in resina antiurto, stabilizzato ai raggi UV, inattaccabile da ruggine e corrosione. Idoneo per il montaggio a palo o a parete. Provvisto di parabola riflettente in alluminio per direzionare il flusso luminoso. Base con portalampada E27 o E40 predisposta per il fissaggio del frangiluce. Idoneo per il montaggio a palo e a parete. Classe di isolamento II, grado di protezione IP65.



F50.000.E27FC6

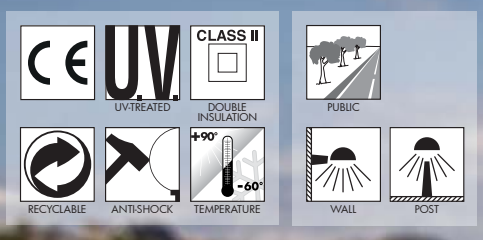

GINO 400 E27 - E40 - COMPONENTS

IP65



ROOF complete with decorative pinnacle made of shockproof resin material, UV-rays stabilized, rust and corrosion-free.

TETTO *completo di pinnacolo decorativo, realizzato in resina antiurto, stabilizzato ai raggi UV, inattaccabile da ruggine e corrosione.*

Parabolic **REFLECTOR** made of anodized aluminium and fixed under the luminaries roof, designed to optimize the light efficiency performance and to allow a uniform light distribution.

PARABOLA *riflettente realizzata in alluminio anodizzato fissata sotto il tetto del diffusore, progettata per ottimizzare il rendimento luminoso e permettere una uniforme distribuzione della luce.*

DIFFUSER made of UV-rays stabilized polymethylmethacrylate (PMMA), one piece only, available in clear or opal colour.

DIFFUSORE *realizzato in polimetilmetacrilato (PMMA) stabilizzato ai raggi UV, un pezzo unico, disponibile in colore trasparente o opale.*



Chrome aluminium **LOUVRE** with a laminar symmetrical optic system to direct the lighting output and to get a lower dazzle (optional).

FRANGILUCE *in alluminio cromato con sistema ottico lamellare a ripartizione simmetrica per orientare il fascio di luce e ridurre l'abbagliamento (opzionale).*

Resin **BASE** consisting of a support (Ø 60mm) and of a cover suitable for ballast fixation on its lower side and provided with E27 or E40 lampholder on its upper side. A rubber gasket assures the protection of the electrical accessories seat against external agents.

BASE *in resina composta da un supporto e da un coperchio nella cui parte inferiore possono essere fissati i reattori e nella cui parte superiore si trova l'alloggiamento per il portalampada E27 o E40 (incluso). Una guarnizione in gomma garantisce la protezione dell'alloggiamento degli accessori elettrici dagli agenti esterni.*

GINO 400 E27

F50.000 *



Dimensions and weight
Height: 715 mm
Diameter: 480 mm
Weight: 4,2 Kg
Junction to support: diameter 60 mm
Area expose to wind pressure:
CxS = m^2 0,157

Moulded colours:
Black *White* *Grey*

Diffuser PMMA:
Clear *Opal*

CHROME ALUMINIUM LOUVRE

H.FC6 open
Upward position



E27-E40

		*ADD. SUFFIX
 Luminaries supplied with E27 or E40 lampholder. Metal plate for ballast fixation available as an option (H.BAL.PLT)	suitable lamps: CFL-LED SON-HQI max 100W	**E27** Lampholder only	.E27
		E40 Lampholder only	.E40

** ADD THESE SUFFIXES TO THE REFERENCES MENTIONED IN THE CATALOGUE*

PHOTOMETRIC DATA SAMPLE

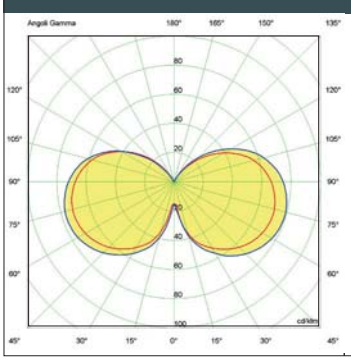

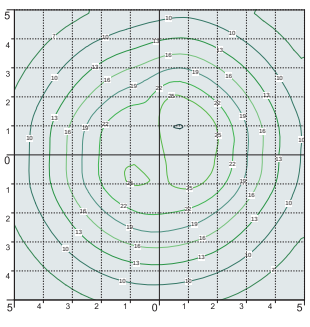

GINO 400 *clear HQI 100W.*

POST height 3,5mt
10x10mt area: average 15 lux

The photometric data for all the versions are available upon request or on our website.

GINO 400

LARGE SIZE









MIDIPILAR/GINO400

F50.254

Pcs 1
Kg 6,4
mc 0,09

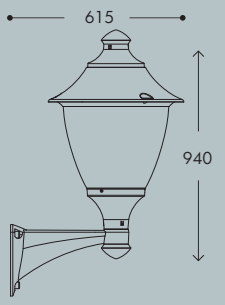

NEW LOT/GINO400

F50.115

Pcs 1
Kg 6,1
mc 0,07

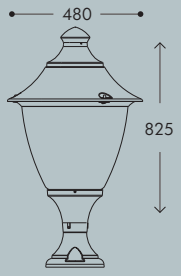

GINO400

F50.000

Pcs 1
Kg 5,8
mc 0,06

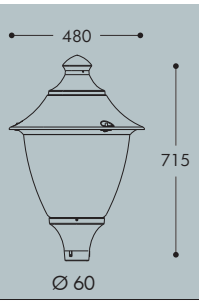

EKTOR 2500/GINO400

F50.361.000

Pcs 1
Kg 30,1
mc 0,21



EKTOR 3000/GINO400 | AKILLE 3000/GINO400

F50.364.000 | F50.414.000

Pcs 1
Kg 33,5
mc 0,24

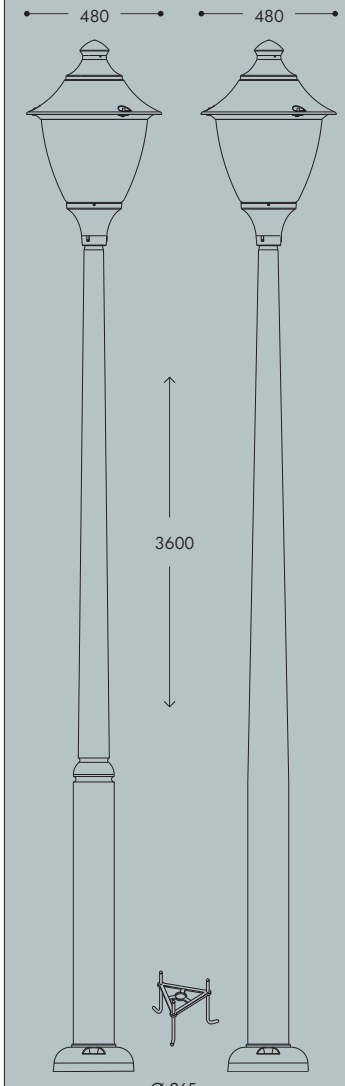

EKTOR 3500/GINO400 | AKILLE 3500/GINO400

F50.367.000 | F50.417.000

Pcs 1
Kg 26,9
mc 0,26

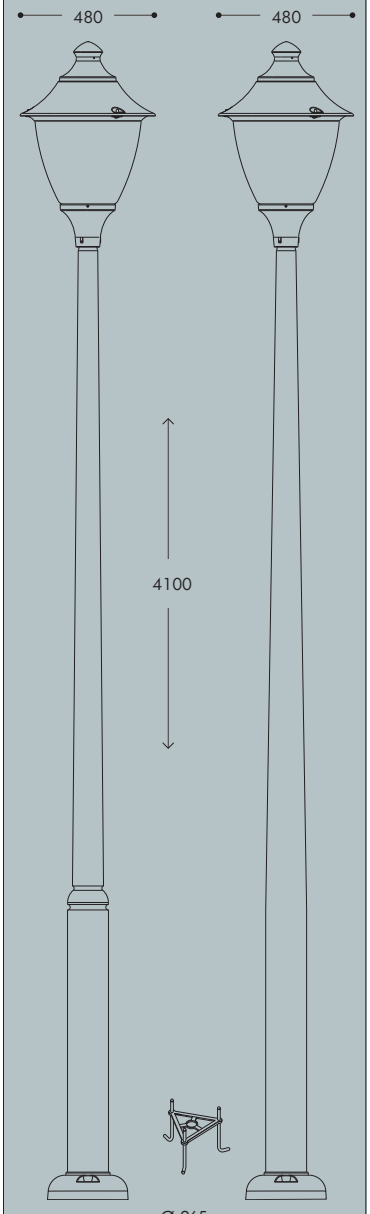

EKTOR 4000/GINO400 | AKILLE 4000/GINO400

F50.371.000 | F50.421.000

Pcs 1
Kg 40,3
mc 0,29

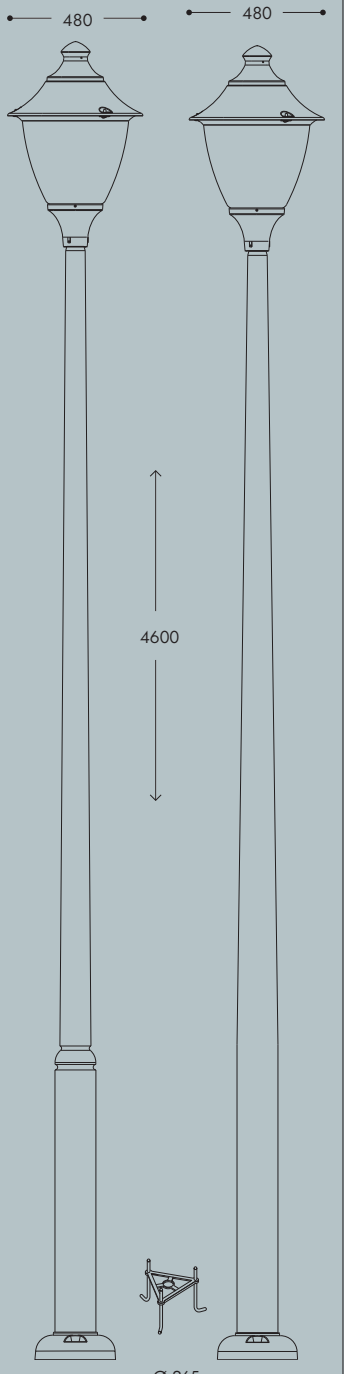

GINO 400

LARGE SIZE



F50.414.A20.D6L



F50.371.A30.D6L

MADE IN ITALY

EKTOR 2500 MIDIPILAR/GINO400 3L

F50.361.A30

Pcs 1
Kg 44,5
mc 0,515

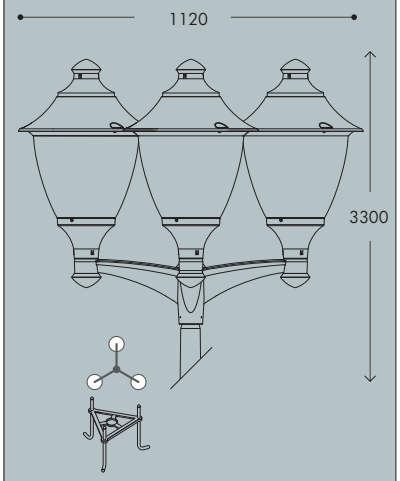

EKTOR 2500 MIDIPILAR/GINO400 2L

F50.361.A20

Pcs 1
Kg 38,4
mc 0,318

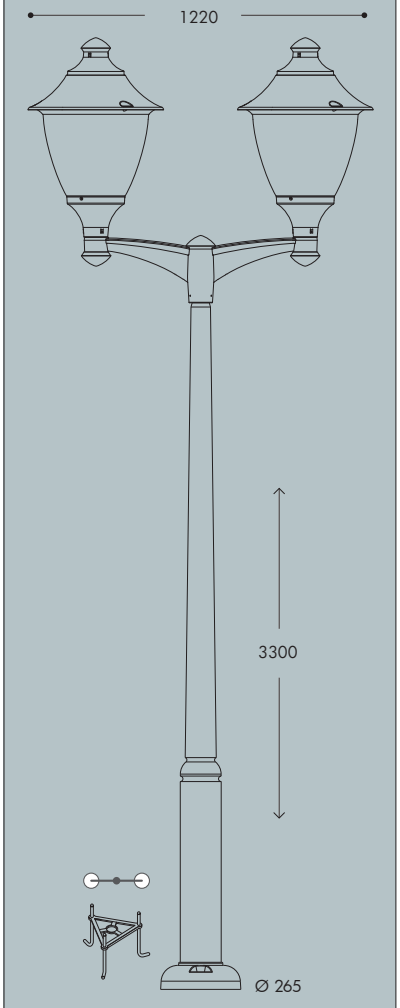

EKTOR 4000 MIDIPILAR/GINO400 2L	AKILLE 4000 MIDIPILAR/GINO400 2L
F50.371.A20	F50.421A20

Pcs 1
Kg 48,3
mc 0,397

EKTOR 3500 MIDIPILAR/GINO400 2L	AKILLE 3500 MIDIPILAR/GINO400 2L
F50.367.A20	F50.417.A20

Pcs 1
Kg 44,9
mc 0,37

EKTOR 3000 MIDIPILAR/GINO400 2L	AKILLE 3000 MIDIPILAR/GINO400 2L
F50.364.A20	F50.414.A20

Pcs 1
Kg 41,5
mc 0,344

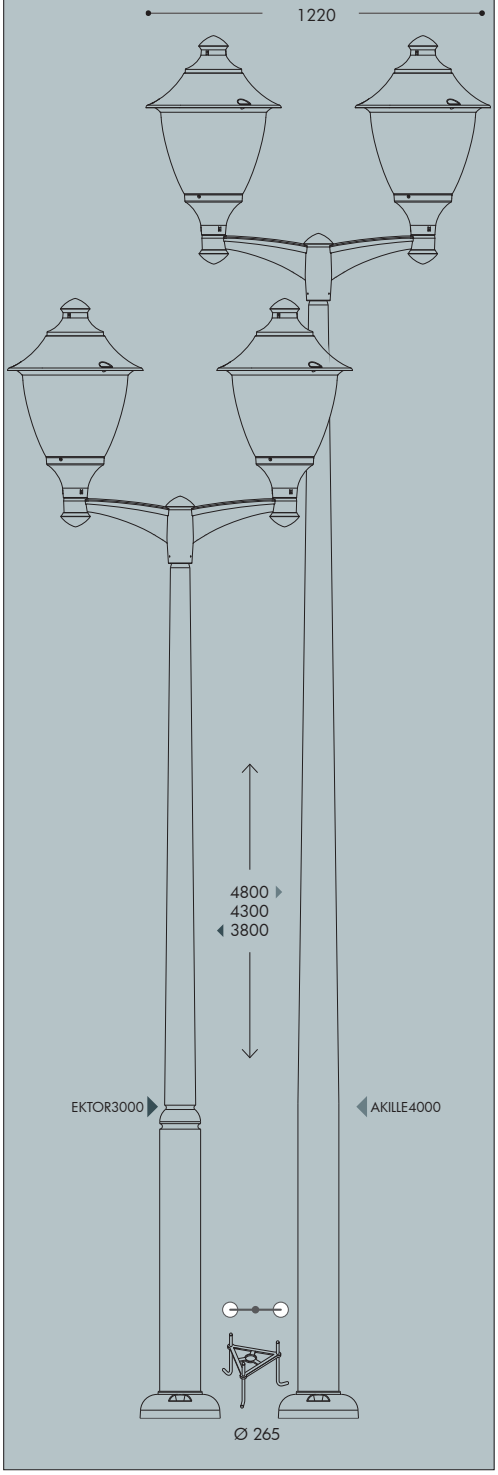

EKTOR 4000 MIDIPILAR/GINO400 3L	AKILLE 4000 MIDIPILAR/GINO400 3L
F50.371.A30	F50.421.A30

Pcs 1
Kg 54,7
mc 0,594

EKTOR 3500 MIDIPILAR/GINO400 3L	AKILLE 3500 MIDIPILAR/GINO400 3L
F50.367.A30	F50.417.A30

Pcs 1
Kg 51,3
mc 0,568

EKTOR 3000 MIDIPILAR/GINO400 3L	AKILLE 3000 MIDIPILAR/GINO400 3L
F50.364.A30	F50.414.A30

Pcs 1
Kg 47,9
mc 0,541

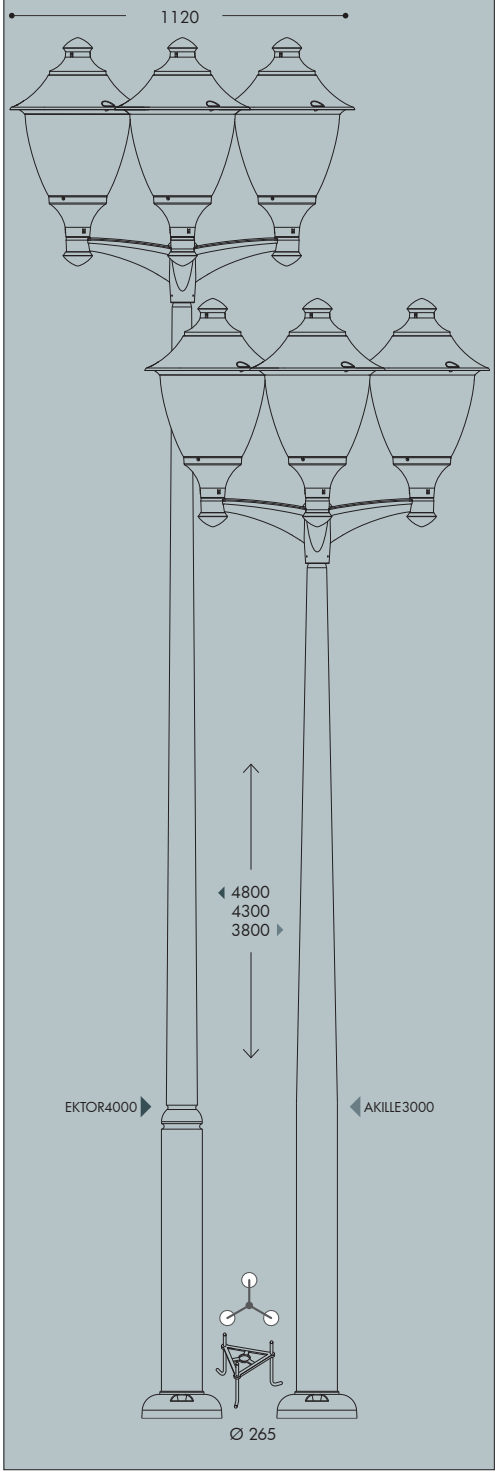

VIVI 500 GX53 LED

GRAND SIZE

Modern luminaries made of shockproof resin material, UV-rays stabilized, rust and corrosion-free. Suitable for post top, wall and hanging installation. Equipped with TÜV approved, long-life and efficient **GX53 LED modular system** in different wattages. Designed according to the international regulations against light pollution (standard UNI 10819). Insulation class II, Protection rating IP65.

*Diffusore moderno realizzato in resina antiurto, stabilizzato ai raggi UV, inattaccabile da ruggine e corrosione. Idoneo per il montaggio a palo, a sospensione o a parete. Provvisto di **sistema modulare a LED GX53** approvato TÜV di lunga durata ed alta efficienza disponibile in diverse potenze. Progettato in ottemperanza alle norme internazionali contro l'inquinamento luminoso (standard UNI 10819). Classe di isolamento II, grado di protezione IP65.*



V60.000.D9L

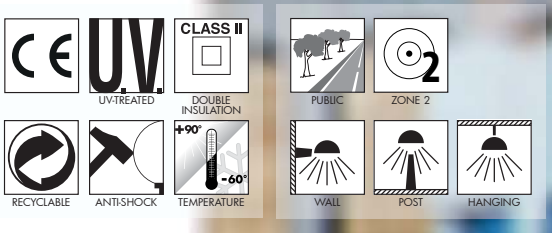

MADE IN ITALY

VIVI 500 GX53 LED - COMPONENTS

IP65



ROOF made of shockproof resin material one piece only, UV-rays stabilized, rust and corrosion-free.

TETTO *in un unico pezzo, realizzato in resina antiurto, stabilizzata ai raggi UV, inattaccabile da ruggine e corrosione.*



DIFFUSER made of UV-rays stabilized polymethylmethacrylate (PMMA), one piece only, available in clear or opal colour.

DIFFUSORE *realizzato in polimetilmetacrilato (PMMA) stabilizzato ai raggi UV, disponibile in colore trasparente o opale.*



Decorative connection **RING** to be fixed on the luminaries diffuser.

ANELLO *decorativo di connessione da fissare sul diffusore dell'apparecchio.*

VIVI 500 GX53 LED

V60.000 *



Dimensions and weight
Height: 600 mm
Diameter: 600 mm
Weight: 7,7 Kg
Junction to support: diameter 60 mm
Area expose to wind pressure:
CxS = m^2 0,1932

Moulded colours:
Black *White* *Grey*

Diffuser PMMA:
Clear *Opal*

GX53 LED



- **COST SAVING:** long-life and efficient LED light sources.
- **BUILT-IN DRIVER:** quick and easy lamp replacement
- **GREAT FLEXIBILITY:** GX53 standard lamp holder.
- **FUTURE-PROOFED LUMINARIES:** performances easy to upgrade to latest technology developments.
- **SUITABLE FOR OUTDOOR USE:** built-in driver fully protected against heat and humidity by silicone paste.

Luminaries supplied with white resin CEILING provided with TÜV approved, long-life and efficient **9x GX53 LED lamps included**. Each lamp can be quickly and easily replaced individually, making the luminaries maintenance very simple.



			*ADD. SUFFIX
9x 7W **63W**	**7200 Lm**	4000 K	.C9L
		3000 K	.C9R
9x 10W **90W**	**10800 Lm**	4000 K	.D9L
		3000 K	.D9R

** ADD THESE SUFFIXES TO THE REFERENCES MENTIONED IN THE CATALOGUE*

LED LAMPS

More technical details about TÜV approved Fumagalli LED Lamps on page 512.

PHOTOMETRIC DATA SAMPLE - VIVI 500 GX53 LED

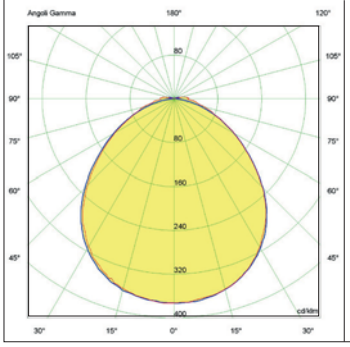

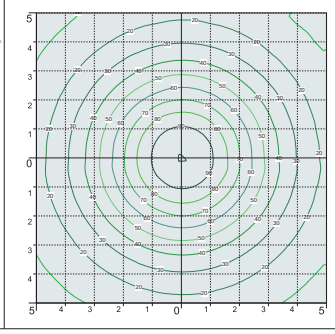

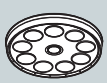

SAVE **-45%**

9x10W GX53 LED
90W
(power consumption)

Area: 10x10mt
Height: 5mt
34 lux

=

VIVI 500 E40



HQI 150W
165W
(power consumption)

Area: 10x10mt
Height: 5mt
35 lux

VIVI 500 E27

GRAND SIZE

Modern luminaries made of shockproof resin material, UV-rays stabilized, rust and corrosion-free. Suitable for post top, wall and hanging installation. Provided with high temperature resistant ceiling suitable for horizontal bulb fixation and with aluminum reflector to optimize the light distribution. Designed according to the international regulations against light pollution (standard UNI 10819). Insulation class II, Protection rating IP65.

Diffusore moderno realizzato in resina antiurto, stabilizzato ai raggi UV, inattaccabile da ruggine e corrosione. Idoneo per il montaggio a palo, a sospensione o a parete. Fornito con soffitto ad alta resistenza al calore idoneo per il fissaggio orizzontale della lampadina e provvisto di parabola riflettente in alluminio per direzionare il flusso luminoso. Progettato in ottemperanza alle norme internazionali contro l'inquinamento luminoso (standard UNI 10819). Classe di isolamento II, grado di protezione IP65.



V60.000.E27

MADE IN ITALY

VIVI 500 E27 - E40 - COMPONENTS

IP65



ROOF made of shockproof resin material, UV-rays stabilized, rust and corrosion-free.

TETTO *realizzato in resina antiurto, stabilizzata ai raggi UV, inattaccabile da ruggine e corrosione.*



High temperature resistant **CEILING** made of white polycarbonate (PC), UV-rays stabilized, suitable for ballast fixation on its upper side and provided with E27 or E40 lampholder on its lower side. Bulb in horizontal position.

SOFFITTO *realizzato in policarbonato bianco (PC) ad alta resistenza al calore, stabilizzato ai raggi UV, nella cui parte superiore vengono fissati i reattori. Fornito completo di portalampada E27 o E40 atto a sostenere la lampadina in posizione orizzontale.*

Parabolic **REFLECTOR** made of anodized aluminium, designed to optimize the light distribution and to limit the skyward dispersion of the luminous flux.

PARABOLA *riflettente realizzata in alluminio anodizzato, progettata per ottimizzare la distribuzione del flusso luminoso e limitarne la dispersione verso il cielo.*



DIFFUSER made of UV-rays stabilized polymethylmethacrylate (PMMA), one piece only, available in clear or opal colour.

DIFFUSORE *realizzato in polimetilmetacrilato (PMMA) stabilizzato ai raggi UV, un pezzo unico, disponibile in colore trasparente o opale.*

Decorative connection **RING** to be fixed on the luminaries diffuser.

ANELLO *decorativo di connessione da fissare sul diffusore dell'apparecchio.*

VIVI 500 E27

V60.000 *



Dimensions and weight
Height: 600 mm
Diameter: 600 mm
Weight: 6 Kg
Junction to support: diameter 60 mm
Area expose to wind pressure:
CxS = m^2 0,1932

Moulded colours:
Black *White* *Grey*

Diffuser PMMA:
Clear *Opal*

E27-E40

		*ADD. SUFFIX
 Luminaries supplied with E27 or E40 lampholder. Metal plate for ballast fixation available as an option (H.BAL.PLT)	suitable lamps: CFL-LED SON-HQI max 150W	**E27** Lampholder only	.E27
		E40 Lampholder only	.E40

HORIZONTAL BULB

AGAINST LIGHT POLLUTION

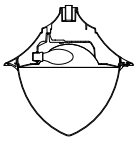

E27 - E40 VERSION

** ADD THESE SUFFIXES TO THE REFERENCES MENTIONED IN THE CATALOGUE*

PHOTOMETRIC DATA SAMPLE

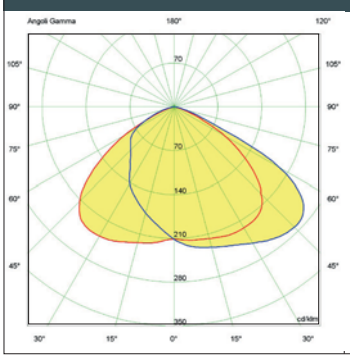

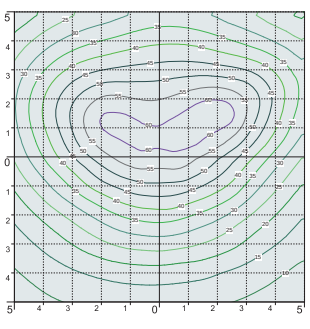

VIVI 500 *clear HQI 150W.*

POST height 5mt
10x10mt area: average 35 lux

The photometric data for all the versions are available upon request or on our website.

VIVI 500

GRAND SIZE

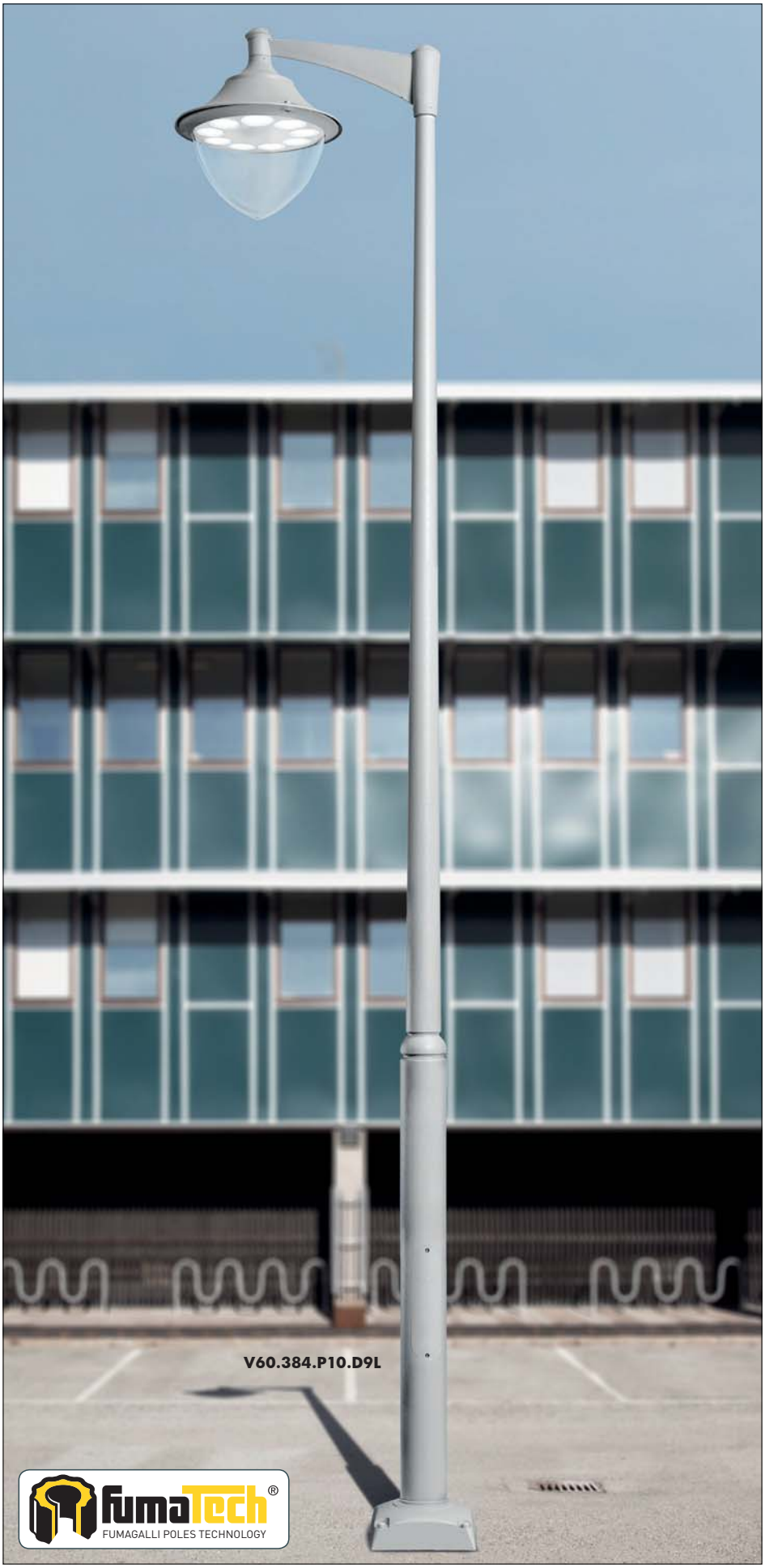







MADE IN ITALY

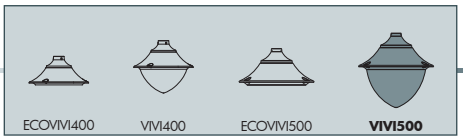

VIVI 500
GRAND SIZE

VIVI 500
V60.000

Pcs 1
Kg 7,7
mc 0,10

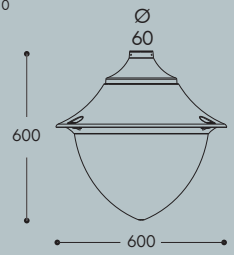

NEW LOT/VIVI500
V60.115

Pcs 1
Kg 8,7
mc 0,13

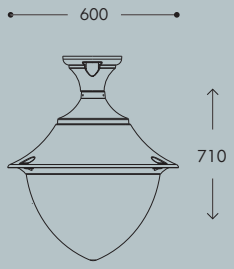

MARIO/VIVI500
V60.129

Pcs 1
Kg 7,1
mc 0,11

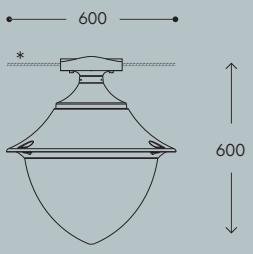

*rope not included

PILAR/VIVI500
V60.253

Pcs 1
Kg 9,7
mc 0,15

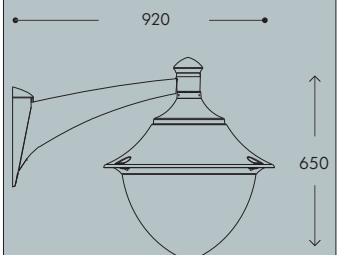

EKTOR 6000 PILAR/VIVI500 2L
V60.384.P20

Pcs 1
Kg 94,6
mc 1,46

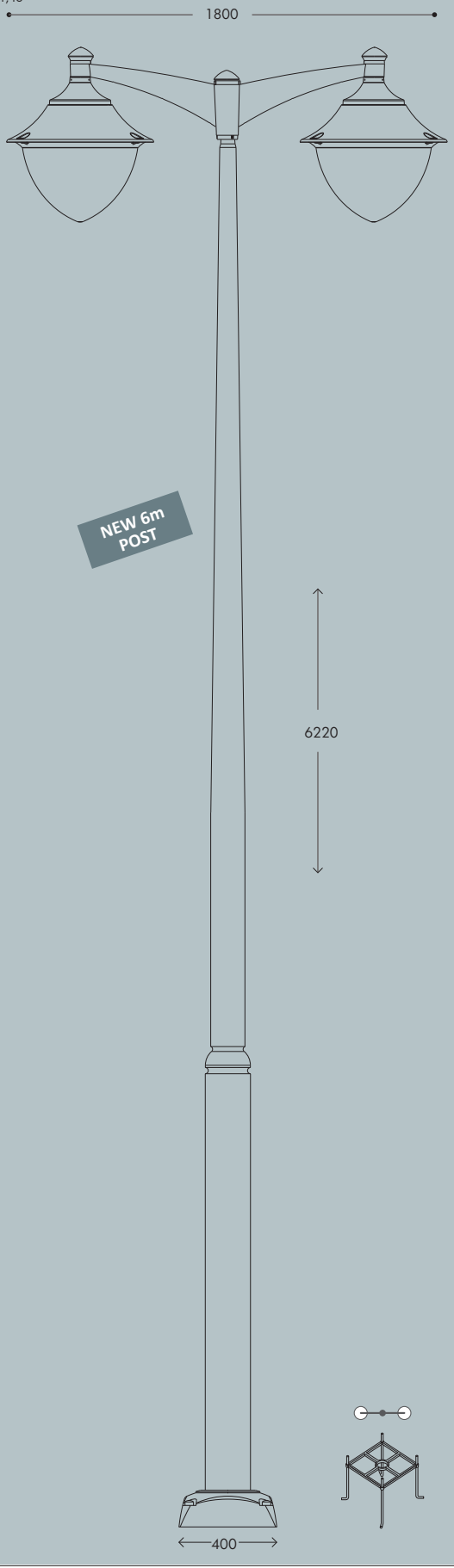

EKTOR 6000 PILAR/VIVI500 1L
V60.384.P10

Pcs 1
Kg 86,2
mc 1,36

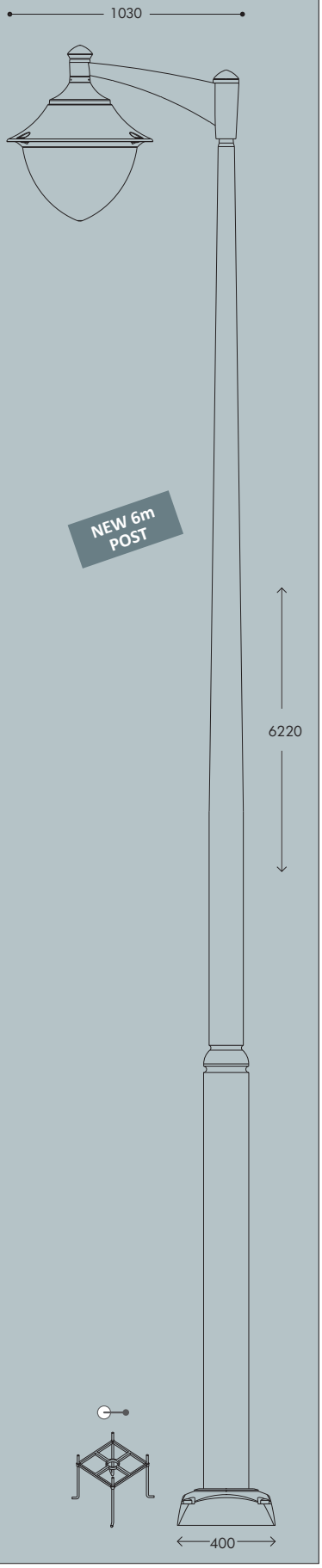

VIVI 500

GRAND SIZE



V60.371.P20.D9L



V60.421.P10.E27

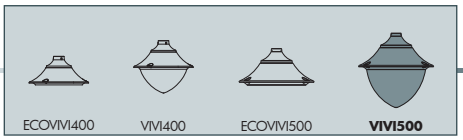

VIVI 500
GRAND SIZE

EKTOR 5000 PILAR/VIVI500 1L	AKILLE 5000 PILAR/VIVI500 1L
V60.377.P10	V60.427.P10

Pcs 1
Kg 55,7
mc 0,43

EKTOR 4500 PILAR/VIVI500 1L	AKILLE 4500 PILAR/VIVI500 1L
V60.374.P10	V60.424.P10

Pcs 1
Kg 50,2
mc 0,40

EKTOR 4000 PILAR/VIVI500 1L	AKILLE 4000 PILAR/VIVI500 1L
V60.371.P10	V60.421.P10

Pcs 1
Kg 44,7
mc 0,37

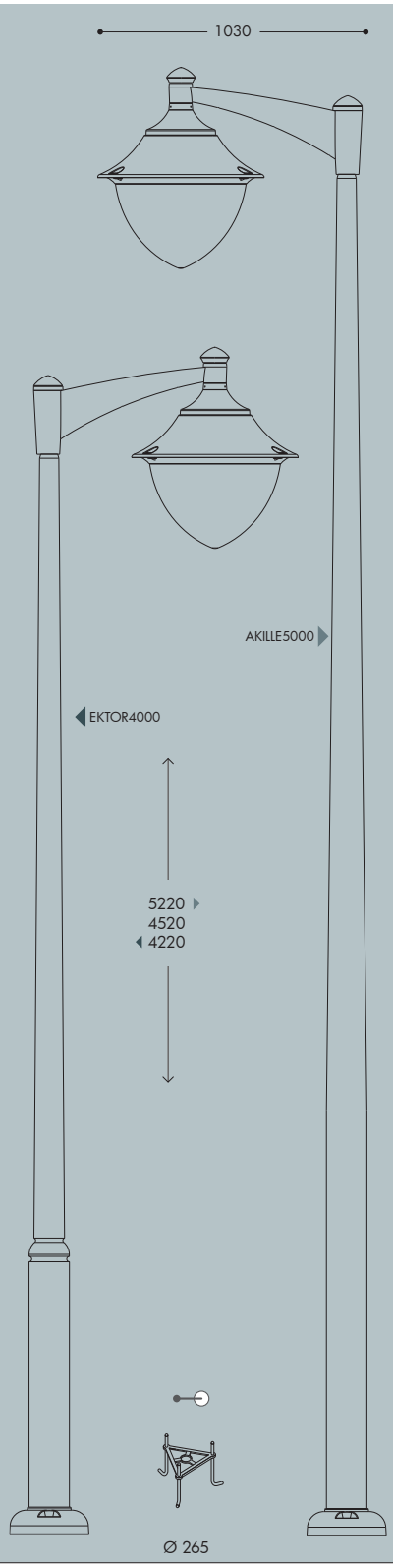

EKTOR 5000 PILAR/VIVI500 2L	AKILLE 5000 PILAR/VIVI500 2L
V60.377.P20	V60.427.P20

Pcs 1
Kg 65,1
mc 0,60

EKTOR 4500 PILAR/VIVI500 2L	AKILLE 4500 PILAR/VIVI500 2L
V60.374.P20	V60.424.P20

Pcs 1
Kg 59,6
mc 0,57

EKTOR 4000 PILAR/VIVI500 2L	AKILLE 4000 PILAR/VIVI500 2L
V60.371.P20	V60.421.P20

Pcs 1
Kg 54,1
mc 0,54

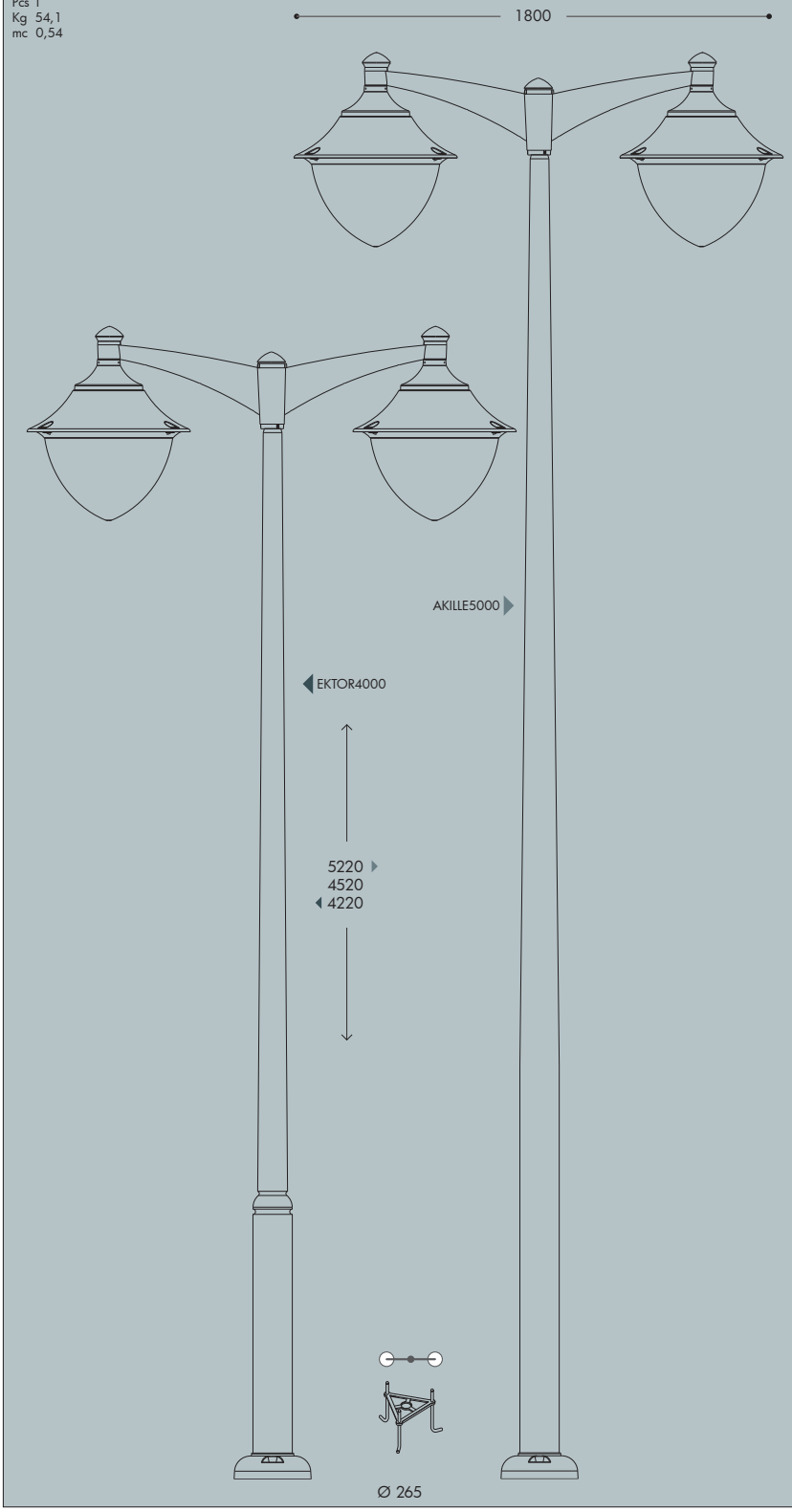

ECOVIVI 500 GX53 LED

GRAND SIZE

Modern luminaries made of shockproof resin material, UV-rays stabilized, rust and corrosion-free. Suitable for post top, wall and hanging installation. Supplied with flat diffuser granting no upward light emission. Equipped with TÜV approved, long-life and efficient **GX53 LED modular system** in different wattages. Designed according to the international regulations against light pollution (standard UNI 10819 – Installation area: Zone 1). Insulation class II, Protection rating IP65.

*Diffusore moderno realizzato in resina antiurto, stabilizzato ai raggi UV, inattaccabile da ruggine e corrosione. Idoneo per il montaggio a palo, a sospensione o a parete. Fornito con diffusore piatto per garantire assenza di emissioni di luce verso l'alto. Provvisto di **sistema modulare a LED GX53** approvato TÜV di lunga durata ed alta efficienza disponibile in diverse potenze. Progettato in ottemperanza alle norme internazionali contro l'inquinamento luminoso (standard UNI 10819 – Area di installazione: Zona 1). Classe di isolamento II, grado di protezione IP65.*

EV6.000.D9L

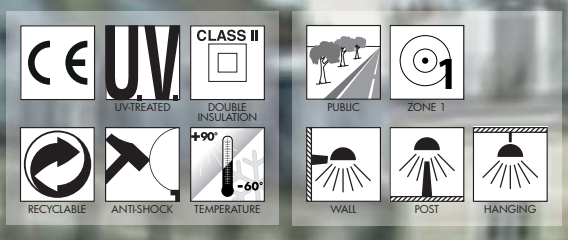

ECOVIVI 500 GX53 LED - COMPONENTS

IP65



ROOF made of shockproof resin material one piece only, UV-rays stabilized, rust and corrosion-free.

TETTO *in un unico pezzo, realizzato in resina antiurto, stabilizzata ai raggi UV, inattaccabile da ruggine e corrosione.*



DIFFUSER with flat shape to avoid the skyward dispersion of the luminous flux, according to the international regulations against light pollution and in particular the standard UNI 108119. Made of UV-rays stabilized polycarbonate (PC).

DIFFUSORE *con configurazione piatta per evitare la dispersione verso il cielo del flusso luminoso, in ottemperanza alle norme internazionali sull'inquinamento luminoso ed in particolare la norma UNI 10819. Realizzato in policarbonato (PC), stabilizzato ai raggi UV.*





Decorative connection **RING** to be fixed on the luminaries diffuser.

ANELLO *decorativo di connessione da fissare sul diffusore dell'apparecchio.*

ECOVIVI 500 GX53 LED

EV6.000 *



Dimensions and weight
Height: 300 mm
Diameter: 600 mm
Weight: 6,7 Kg
Junction to support: diameter 60 mm
Area expose to wind pressure:
CxS = m^2 0,0982

Moulded colours:
Black *White* *Grey*

Diffuser PC (UV treated):
Clear

GX53 LED



- **COST SAVING:** long-life and efficient LED light sources.
- **BUILT-IN DRIVER:** quick and easy lamp replacement
- **GREAT FLEXIBILITY:** GX53 standard lamp holder.
- **FUTURE-PROOFED LUMINARIES:** performances easy to upgrade to latest technology developments.
- **SUITABLE FOR OUTDOOR USE:** built-in driver fully protected against heat and humidity by silicone paste.

Luminaries supplied with white resin CEILING provided with TÜV approved, long-life and efficient **9x GX53 LED lamps included**. Each lamp can be quickly and easily replaced individually, making the luminaries maintenance very simple.



			*ADD. SUFFIX
9x 7W **63W**	**7200 Lm**	4000 K	.C9L
		3000 K	.C9R
9x 10W **90W**	**10800 Lm**	4000 K	.D9L
		3000 K	.D9R

** ADD THESE SUFFIXES TO THE REFERENCES MENTIONED IN THE CATALOGUE*

LED LAMPS

More technical details about TÜV approved Fumagalli LED Lamps on page 512.

PHOTOMETRIC DATA SAMPLE - ECOVIVI 500 GX53 LED

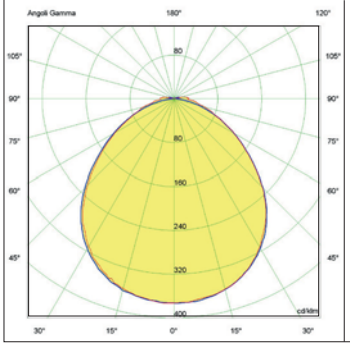

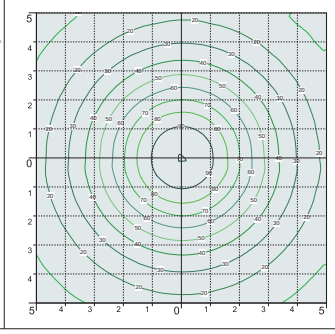

SAVE -45%

9x10W GX53 LED 90W
(power consumption)

Area: 10x10mt
Height: 5mt
38 lux

=

ECOVIVI 500 E40



HQI 150W 165W
(power consumption)

Area: 10x10mt
Height: 5mt
38 lux

ECOVIVI 500 E27

GRAND SIZE

Modern luminaries made of shockproof resin material, UV-rays stabilized, rust and corrosion-free. Suitable for post top, wall and hanging installation. Supplied with flat diffuser granting no upward light emission. Provided with high temperature resistant ceiling suitable for horizontal bulb fixation and with aluminum reflector to optimize the light distribution. Designed according to the international regulations against light pollution (standard UNI 10819 - Installation area: Zone 1). Insulation class II, Protection rating IP65.

Diffusore moderno realizzato in resina antiurto, stabilizzato ai raggi UV, inattaccabile da ruggine e corrosione. Idoneo per il montaggio a palo, a sospensione o a parete. Fornito con diffusore piatto per garantire assenza di emissioni di luce verso l'alto. Provvisto di soffitto ad alta resistenza al calore idoneo per il fissaggio orizzontale della lampadina e completo di parabola riflettente in alluminio per direzionare il flusso luminoso. Progettato in ottemperanza alle norme internazionali contro l'inquinamento luminoso (standard UNI 10819 – Area di installazione: Zona 1). Classe di isolamento II, grado di protezione IP65.



EV6.000.E27

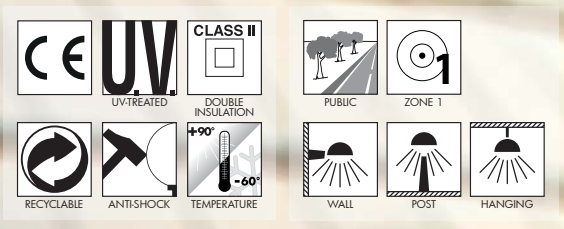

ECOVIVI 500 E27 - E40 - COMPONENTS

IP65



ROOF made of shockproof resin material, UV-rays stabilized, rust and corrosion-free.

TETTO *realizzato in resina antiurto, stabilizzata ai raggi UV, inattaccabile da ruggine e corrosione.*



High temperature resistant **CEILING** made of white polycarbonate (PC), UV-rays stabilized, suitable for ballast fixation on its upper side and provided with E27 or E40 lampholder on its lower side. Bulb in horizontal position.

SOFFITTO *realizzato in policarbonato bianco (PC) ad alta resistenza al calore, stabilizzato ai raggi UV, nella cui parte superiore vengono fissati i reattori. Fornito completo di portalampada E27 o E40 atto a sostenere la lampadina in posizione orizzontale.*



Parabolic **REFLECTOR** made of anodized aluminium, designed to optimize the light distribution and to limit the skyward dispersion of the luminous flux.

PARABOLA *riflettente realizzata in alluminio anodizzato, progettata per ottimizzare la distribuzione del flusso luminoso e limitarne la dispersione verso il cielo.*



DIFFUSER with flat shape to avoid the skyward dispersion of the luminous flux, according to the international regulations against light pollution and in particular the standard UNI 108119. Made of UV-rays stabilized polycarbonate (PC).

DIFFUSORE *con configurazione piatta per evitare la dispersione verso il cielo del flusso luminoso, in ottemperanza alle norme internazionali sull'inquinamento luminoso ed in particolare la norma UNI 10819. Realizzato in policarbonato (PC) stabilizzato ai raggi UV.*



Decorative connection **RING** to be fixed on the luminaries diffuser.

ANELLO *decorativo da fissare sul diffusore dell'apparecchio.*

ECOVIVI 500 E27

EV6.000 *



Dimensions and weight
Height: 300 mm
Diameter: 600 mm
Weight: 5 Kg
Junction to support: diameter 60 mm
Area expose to wind pressure:
CxS = m^2 0,0982

Moulded colours:
Black *White* *Grey*
Diffuser PC (UV treated):
Clear

E27-E40



Luminaries supplied with E27 or E40 lampholder. Metal plate for ballast fixation available as an option (H.BAL.PLT)

suitable lamps:

CFL-LED
SON-HQI

max 150W

	*ADD. SUFFIX
E27 Lampholder only	.E27
E40 Lampholder only	.E40

HORIZONTAL BULB

AGAINST LIGHT POLLUTION

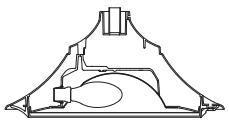

E27 - E40 VERSION

** ADD THESE SUFFIXES TO THE REFERENCES MENTIONED IN THE CATALOGUE*

PHOTOMETRIC DATA SAMPLE

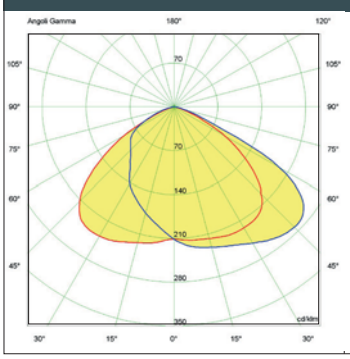

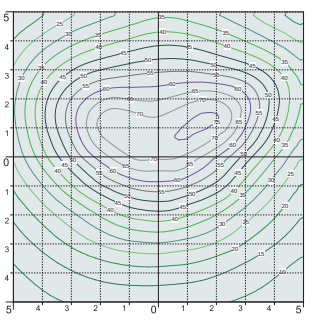

ECOVIVI 500 *clear HQI 150W.*

POST height 5mt
10x10mt area: average 38 lux

The photometric data for all the versions are available upon request or on our website.

ECOVIVI 500

GRAND SIZE



EV6.384.P20.E27

FumaTech® FUMAGALLI POLES TECHNOLOGY

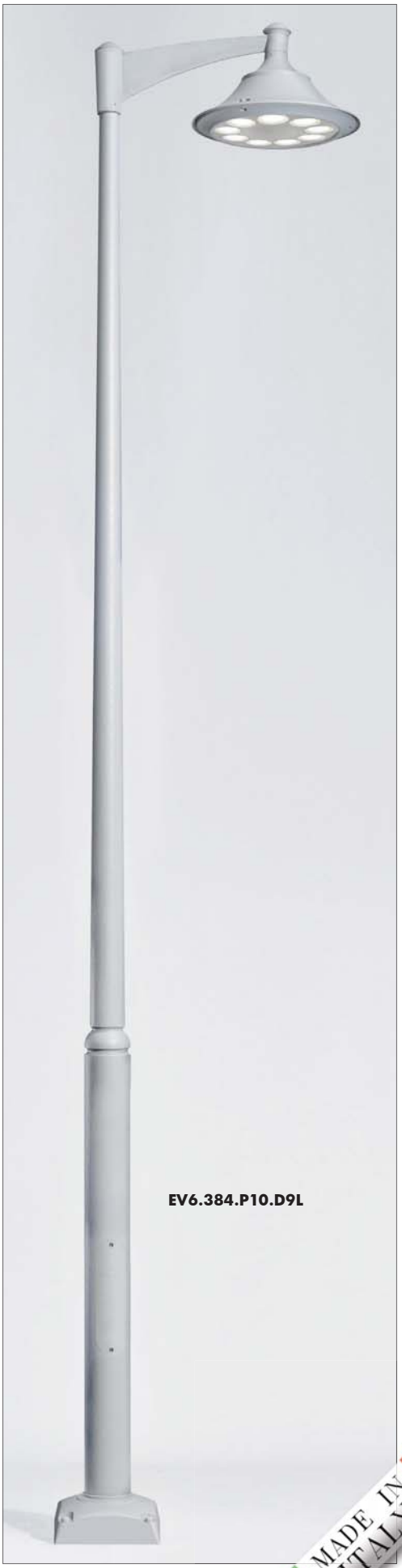

EV6.384.P10.D9L

MADE IN ITALY

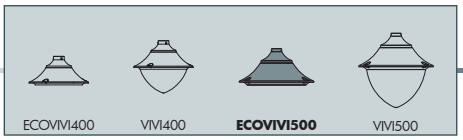

ECOVIVI 500

GRAND SIZE

ECOVIVI 500

EV6.000

Pcs 1
Kg 6,7
mc 0,06

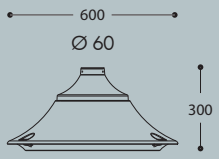

NEW LOT/ECOVIVI500

EV6.115

Pcs 1
Kg 4,9
mc 0,09

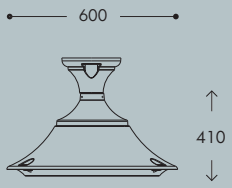

MARIO/ECOVIVI500

EV6.129

Pcs 1
Kg 4,9
mc 0,09

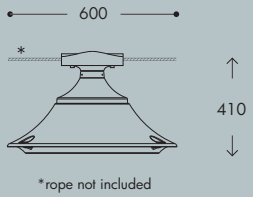

*rope not included

PILAR/ECOVIVI500

EV6.253

Pcs 1
Kg 8,7
mc 0,11

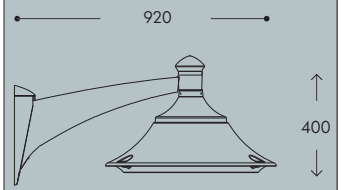

EKTOR 6000 PILAR/ECOVIVI500 2L

EV6.384.P20

Pcs 1
Kg 92,6
mc 1,42

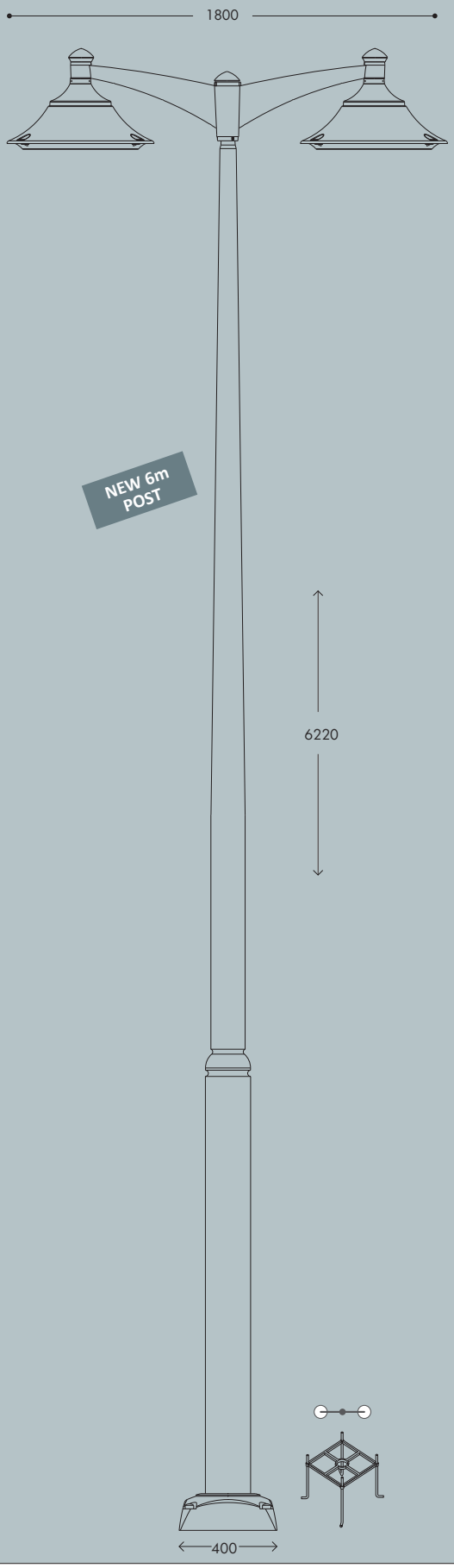

EKTOR 6000 PILAR/ECOVIVI500 1L

EV6.384.P10

Pcs 1
Kg 84,2
mc 1,32

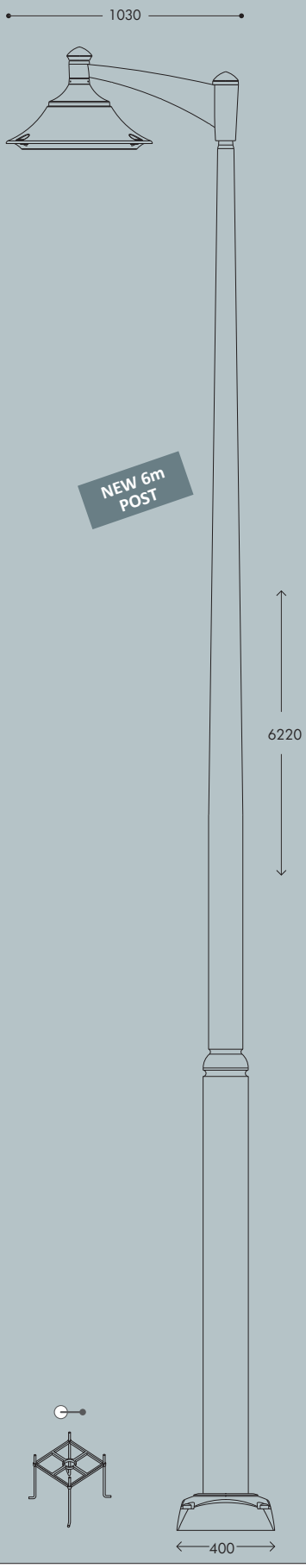

ECOVIVI 500

GRAND SIZE





MADE IN ITALY

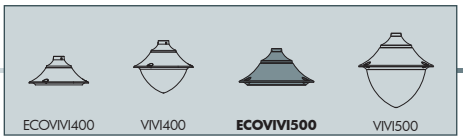

ECOVIVI 500

GRAND SIZE

EKTOR 5000 PILAR/ECOVIVI500 1L	AKILLE 5000 PILAR/ECOVIVI500 1L
EV6.377.P10	EV6.427.P10
Pcs 1 Kg 54,7 mc 0,39	
EKTOR 4500 PILAR/ECOVIVI500 1L	**AKILLE 4500 PILAR/ECOVIVI500 1L**
EV6.374.P10	EV6.424.P10
Pcs 1 Kg 49,2 mc 0,37	
EKTOR 4000 PILAR/ECOVIVI500 1L	**AKILLE 4000 PILAR/ECOVIVI500 1L**
EV6.371.P10	EV6.421.P10
Pcs 1 Kg 43,7 mc 0,35	

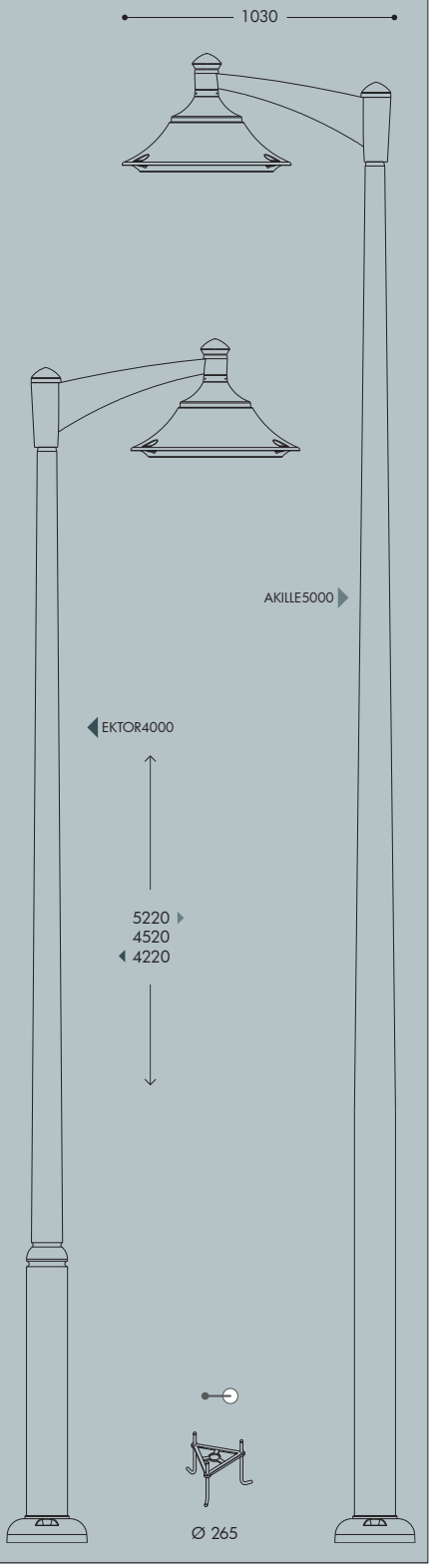

EKTOR 5000 PILAR/ECOVIVI500 2L	AKILLE 5000 PILAR/ECOVIVI500 2L
EV6.377.P20	EV6.427.P20
Pcs 1 Kg 63,1 mc 0,49	
EKTOR 4500 PILAR/ECOVIVI500 2L	**AKILLE 4500 PILAR/ECOVIVI500 2L**
EV6.374.P20	EV6.424.P20
Pcs 1 Kg 57,6 mc 0,47	
EKTOR 4000 PILAR/ECOVIVI500 2L	**AKILLE 4000 PILAR/ECOVIVI500 2L**
EV6.371.P20	EV6.421.P20
Pcs 1 Kg 52,1 mc 0,45	

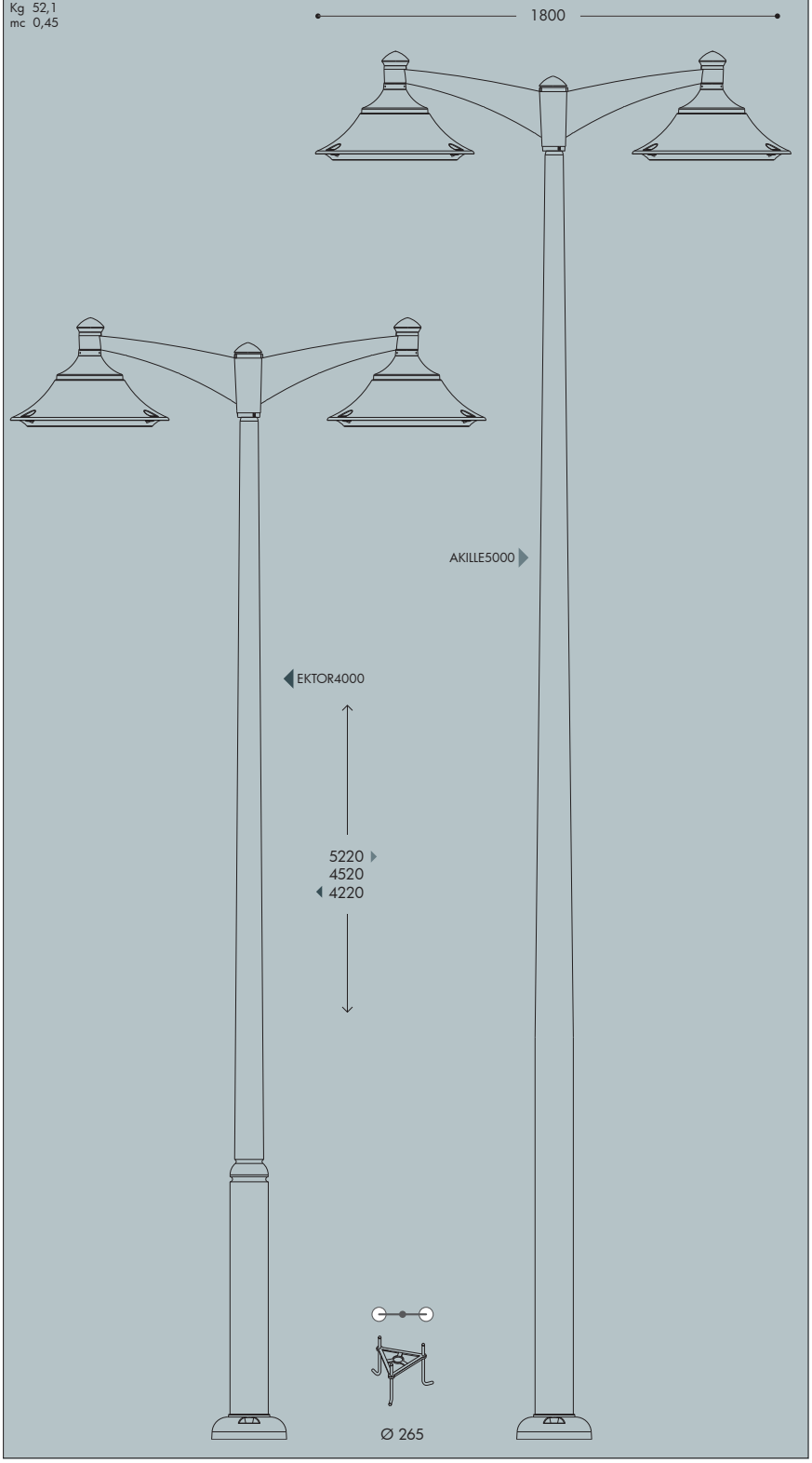

BEPPE 500 GX53 LED

GRAND SIZE

Modern luminaries made of shockproof resin material, UV-rays stabilized, rust and corrosion-free. Suitable for post top or wall installation. Equipped with TÜV approved, long-life and efficient **GX53 LED modular system** in different wattages. Designed according to the international regulations against light pollution (standard UNI 10819). Insulation class II, Protection rating IP65.

*Diffusore moderno realizzato in resina antiurto, stabilizzato ai raggi UV, inattaccabile da ruggine e corrosione. Idoneo per il montaggio a palo o a parete. Provvisto di **sistema modulare a LED GX53** approvato TÜV di lunga durata ed alta efficienza disponibile in diverse potenze. Progettato in ottemperanza alle norme internazionali contro l'inquinamento luminoso (standard UNI 10819). Classe di isolamento II, grado di protezione IP65.*



P60.000.D9L

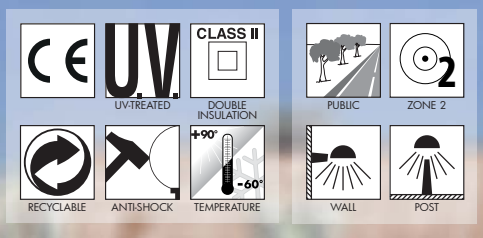

BEPPE 500 GX53 LED - COMPONENTS

IP65



ROOF complete with decorative pinnacle made of shockproof resin material one piece only, UV-rays stabilized, rust and corrosion-free.

TETTO *completo di pinnacolo decorativo in un unico pezzo, realizzato in resina antiurto, stabilizzata ai raggi UV, inattaccabile da ruggine e corrosione*

DIFFUSER made of UV-rays stabilized polymethylmethacrylate (PMMA), one piece only, available in clear or opal colour.

DIFFUSORE *realizzato in polimetilmetacrilato (PMMA) stabilizzato ai raggi UV, disponibile in colore trasparente o opale.*

CAGE for post top installation complete with connection ring (one piece only) to be fixed on the luminaries diffuser.

BIPODE *in un unico pezzo completo di anello di connessione da fissare sul diffusore dell'apparecchio.*

BEPPE 500 GX53 LED

P60.000 *



Dimensions and weight
Height: 850 mm
Diameter: 600 mm
Weight: 9,1 Kg
Junction to support: diameter 60 mm
Area expose to wind pressure:
CxS = m^2 0,246

Moulded colours:
Black *White* *Grey*

Diffuser PMMA:
Clear *Opal*

GX53 LED



- **COST SAVING:** long-life and efficient LED light sources.
- **BUILT-IN DRIVER:** quick and easy lamp replacement
- **GREAT FLEXIBILITY:** GX53 standard lamp holder.
- **FUTURE-PROOFED LUMINARIES:** performances easy to upgrade to latest technology developments.
- **SUITABLE FOR OUTDOOR USE:** built-in driver fully protected against heat and humidity by silicone paste.

Luminaries supplied with white resin CEILING provided with TÜV approved, long-life and efficient **9x GX53 LED lamps included**. Each lamp can be quickly and easily replaced individually, making the luminaries maintenance very simple.



			*ADD. SUFFIX
9x 7W **63W**	**7200 Lm**	4000 K	.C9L
		3000 K	.C9R
9x 10W **90W**	**10800 Lm**	4000 K	.D9L
		3000 K	.D9R

LED LAMPS

More technical details about TÜV approved Fumagalli LED Lamps on page 512.

** ADD THESE SUFFIXES TO THE REFERENCES MENTIONED IN THE CATALOGUE*

PHOTOMETRIC DATA SAMPLE - BEPPE 500 GX53 LED

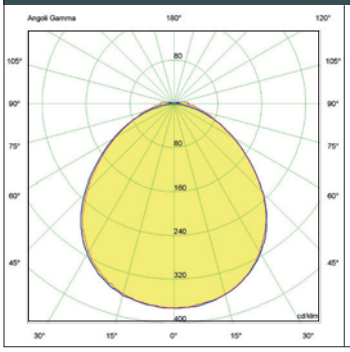

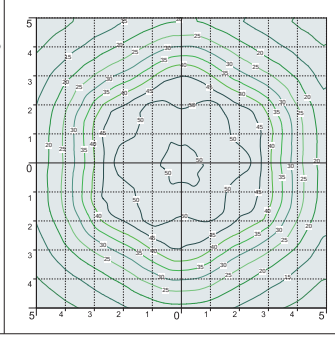

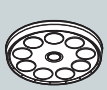

SAVE **-45%**

9x10W GX53 LED
90W
(power consumption)

Area: 10x10mt
Height: 5mt
31 lux

=

BEPPE 500 E40



HQI 150W
165W
(power consumption)

Area: 10x10mt
Height: 5mt
31 lux

BEPPE 500 E27

GRAND SIZE

Modern luminaries made of shockproof resin material, UV-rays stabilized, rust and corrosion-free. Suitable for post top or wall installation. Provided with high temperature resistant ceiling suitable for horizontal bulb fixation and with aluminum reflector to optimize the light distribution. Designed according to the international regulations against light pollution (standard UNI 10819). Insulation class II, Protection rating IP65.

Diffusore moderno realizzato in resina antiurto, stabilizzato ai raggi UV, inattaccabile da ruggine e corrosione. Idoneo per il montaggio a palo o a parete. Fornito con soffitto ad alta resistenza al calore idoneo per il fissaggio orizzontale della lampadina e provvisto di parabola riflettente in alluminio per direzionare il flusso luminoso. Progettato in ottemperanza alle norme internazionali contro l'inquinamento luminoso (standard UNI 10819). Classe di isolamento II, grado di protezione IP65.

P60.000.E27

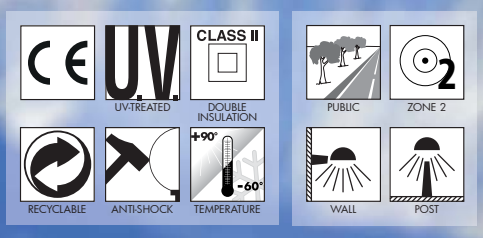

MADE IN ITALY

BEPPE 500 E27 - E40 - COMPONENTS

IP65



ROOF complete with decorative pinnacle made of shockproof resin material, UV-rays stabilized, rust and corrosion-free.

TETTO *completo di pinnacolo decorativo realizzato in resina antiurto, stabilizzata ai raggi UV, inattaccabile da ruggine e corrosione.*

High temperature resistant **CEILING** made of white polycarbonate (PC), UV-rays stabilized, suitable for ballast fixation on its upper side and provided with E27 or E40 lampholder on its lower side. Bulb in horizontal position.

SOFFITTO *realizzato in policarbonato bianco (PC) ad alta resistenza al calore, stabilizzato ai raggi UV, nella cui parte superiore vengono fissati i reattori. Fornito completo di portalampada E27 o E40 atto a sostenere la lampadina in posizione orizzontale.*

Parabolic **REFLECTOR** made of anodized aluminium, designed to optimize the light distribution and to limit the skyward dispersion of the luminous flux.

PARABOLA *riflettente realizzata in alluminio anodizzato, progettata per ottimizzare la distribuzione del flusso luminoso e limitarne la dispersione verso il cielo.*

DIFFUSER made of UV-rays stabilized polymethylmethacrylate (PMMA), one piece only, available in clear or opal colour.

DIFFUSORE *realizzato in polimetilmetacrilato (PMMA) stabilizzato ai raggi UV, un pezzo unico, disponibile in colore trasparente o opale.*

CAGE for post top installation complete with connection ring (one piece only) to be fixed on the luminaries diffuser.

BIPODE *in un unico pezzo completo di anello di connessione da fissare sul diffusore dell'apparecchio.*

BEPPE 500 E27

P60.000 *



Dimensions and weight
Height: 850 mm
Diameter: 600 mm
Weight: 7,5 Kg
Junction to support: diameter 60 mm
Area expose to wind pressure:
CxS = m^2 0,246

Moulded colours:
Black *White* *Grey*

Diffuser PMMA:
Clear *Opal*

E27-E40

		*ADD. SUFFIX
 Luminaries supplied with E27 or E40 lampholder. Metal plate for ballast fixation available as an option (H.BAL.PLT)	suitable lamps: CFL-LED SON-HQI max 150W	**E27** Lampholder only	.E27
		E40 Lampholder only	.E40

** ADD THESE SUFFIXES TO THE REFERENCES MENTIONED IN THE CATALOGUE*

PHOTOMETRIC DATA SAMPLE

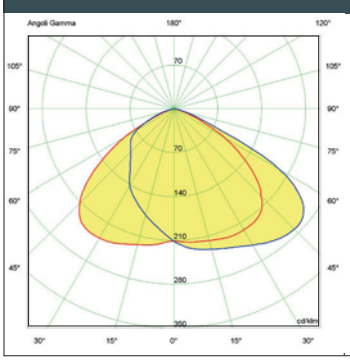

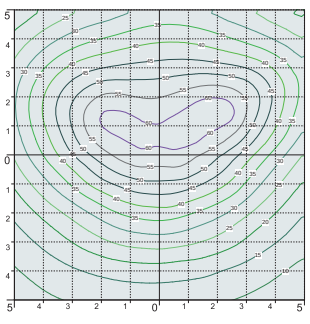

BEPPE 500 *clear HQI 150W.*

POST height 5mt
10x10mt area: average 31 lux

The photometric data for all the versions are available upon request or on our website.

BEPPE 500

GRAND SIZE





MADE IN ITALY

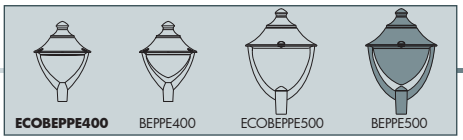

BEPPE 500

GRAND SIZE

EKTOR 6000/BEPPE500

P60.384.000

Pcs 1
Kg 84,1
mc 1,41

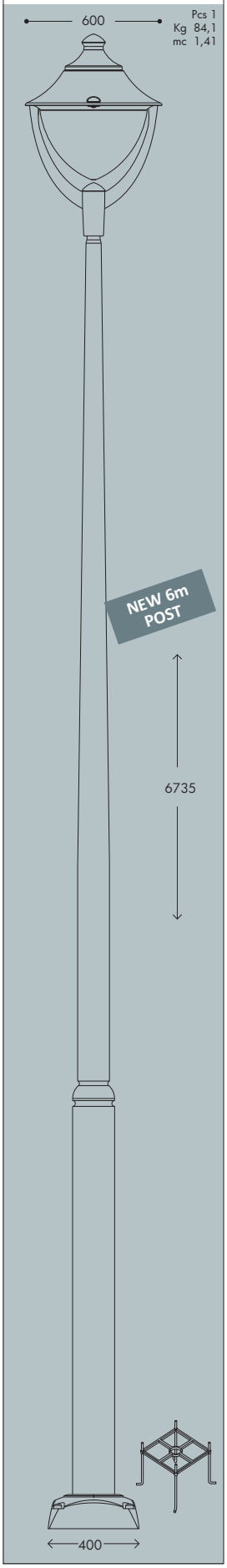

EKTOR 5000/BEPPE500

P60.377.000

AKILLE 5000/BEPPE500

P60.427.000

Pcs 1
Kg 54,6
mc 0,48

EKTOR 4500/BEPPE500

P60.374.000

AKILLE 4500/BEPPE500

P60.424.000

Pcs 1
Kg 49,1
mc 0,46

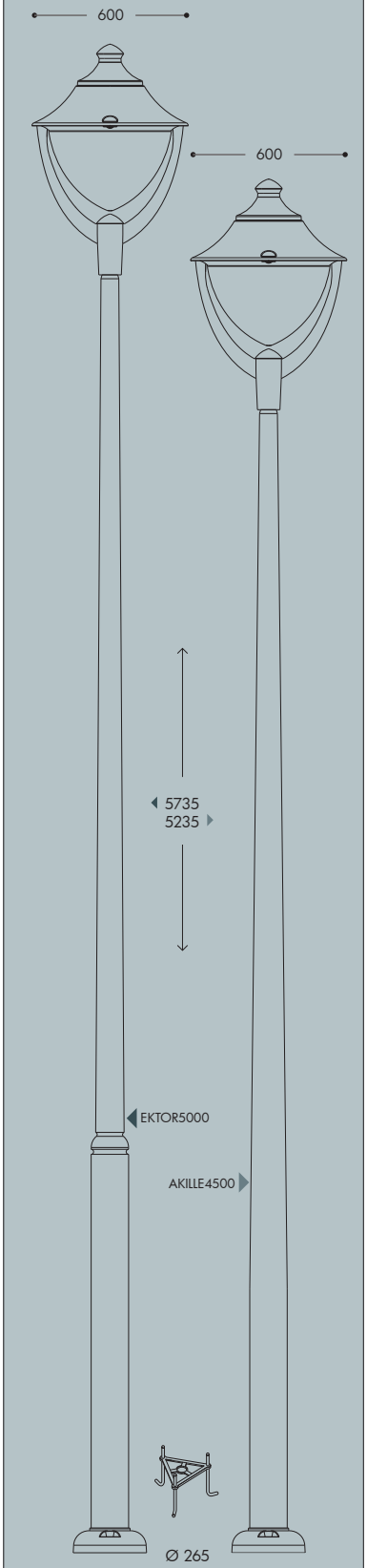

EKTOR 4000/BEPPE500

P60.371.000

AKILLE 4000/BEPPE500

P60.421.000

Pcs 1
Kg 43,6
mc 0,43

EKTOR 3500/BEPPE500

P60.367.000

AKILLE 3500/BEPPE500

P60.417.000

Pcs 1
Kg 40,2
mc 0,40

EKTOR 3000/BEPPE500

P60.364.000

AKILLE 3000/BEPPE500

P60.414.000

Pcs 1
Kg 36,8
mc 0,38

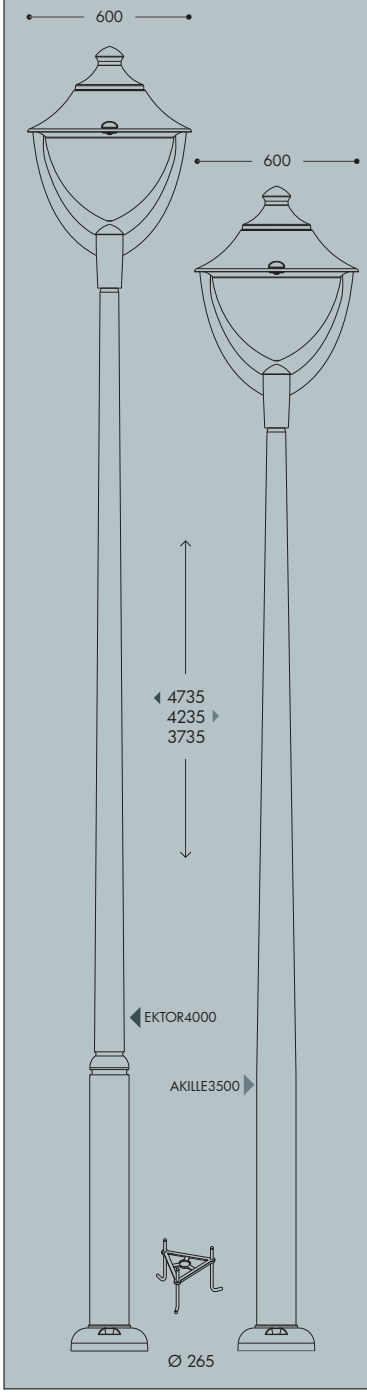

BEPPE500

P60.000

Pcs 1
Kg 9,1
mc 0,20

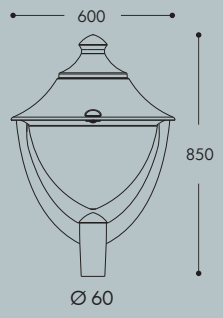

PILAR/BEPPE500

P60.253

Pcs 1
Kg 11,1
mc 0,24

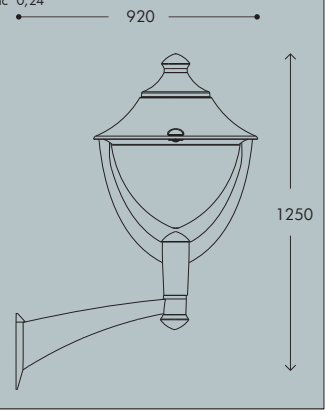

NEW LOT/BEPPE500

P60.115

Pcs 1
Kg 9,4
mc 0,21

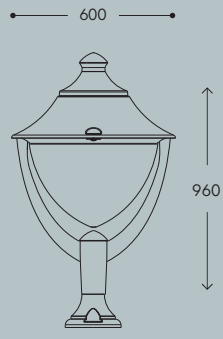

ECOBEPPE 500 GX53 LED

GRAND SIZE

Modern luminaries made in shockproof resin material, UV-rays stabilized, rust and corrosion-free. Suitable for post top or wall installation. Supplied with flat diffuser granting no upward light emission. Equipped with TÜV approved, long-life and efficient GX53 LED modular system in different wattages. Designed according to the international regulations against light pollution (standard UNI 10819 – Installation area: Zone 1). Insulation class II, Protection rating IP65.

Diffusore moderno realizzato in resina antiurto, stabilizzato ai raggi UV, inattaccabile da ruggine e corrosione. Idoneo per il montaggio a palo o a parete. Provvisto di sistema modulare a LED GX53 approvato TÜV di lunga durata ed alta efficienza disponibile in diverse potenze. Progettato in ottemperanza alle norme internazionali contro l'inquinamento luminoso (standard UNI 10819 – Area di installazione: Zona 1). Classe di isolamento II, grado di protezione IP65.



EP6.000.D9L

MADE IN ITALY

ECOBEPPE 500 GX53 LED - COMPONENTS

IP65



ROOF complete with decorative pinnacle made of shockproof resin material one piece only, UV-rays stabilized, rust and corrosion-free.

TETTO *completo di pinnacolo decorativo in un unico pezzo, realizzato in resina antiurto, stabilizzata ai raggi UV, inattaccabile da ruggine e corrosione*

DIFFUSER with flat shape to avoid the skyward dispersion of the luminous flux, according to the international regulations against light pollution and in particular the standard UNI 108119. Made of UV-rays stabilized polycarbonate (PC).

DIFFUSORE *con configurazione piatta per evitare la dispersione verso il cielo del flusso luminoso, in ottemperanza alle norme internazionali sull'inquinamento luminoso ed in particolare la norma UNI 10819. Realizzato in policarbonato (PC), stabilizzato ai raggi UV.*

CAGE for post top installation complete with connection ring (one piece only) to be fixed on the luminaries diffuser.

BIPODE *in un unico pezzo completo di anello di connessione da fissare sul diffusore dell'apparecchio.*

ECOBEPPE 500 GX53 LED

EP6.000 *



Dimensions and weight
Height: 850 mm
Diameter: 600 mm
Weight: 8,1 Kg
Junction to support: diameter 60 mm
Area expose to wind pressure:
CxS = m^2 0,246

Moulded colours:
Black *White* *Grey*

Diffuser PC (UV treated):
Clear

GX53 LED



- **COST SAVING:** long-life and efficient LED light sources.
- **BUILT-IN DRIVER:** quick and easy lamp replacement
- **GREAT FLEXIBILITY:** GX53 standard lamp holder.
- **FUTURE-PROOFED LUMINARIES:** performances easy to upgrade to latest technology developments.
- **SUITABLE FOR OUTDOOR USE:** built-in driver fully protected against heat and humidity by silicone paste.

Luminaries supplied with white resin CEILING provided with TÜV approved, long-life and efficient **9x GX53 LED lamps included**. Each lamp can be quickly and easily replaced individually, making the luminaries maintenance very simple.



			*ADD. SUFFIX
9x 7W **63W**	**7200 Lm**	4000 K	.C9L
		3000 K	.C9R
9x 10W **90W**	**10800 Lm**	4000 K	.D9L
		3000 K	.D9R

LED LAMPS

More technical details about TÜV approved Fumagalli LED Lamps on page 512.

** ADD THESE SUFFIXES TO THE REFERENCES MENTIONED IN THE CATALOGUE*

PHOTOMETRIC DATA SAMPLE - ECOBEPPE 500 GX53 LED

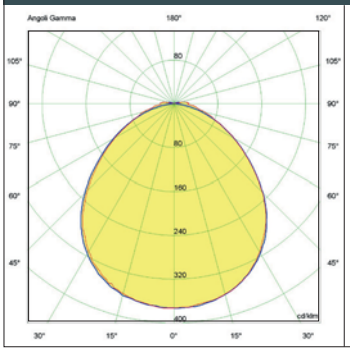

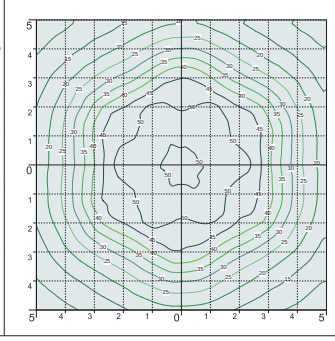

SAVE **-45%**

9x10W GX53 LED
90W
(power consumption)

Area: 10x10mt
Height: 5mt
31 lux

=

ECOBEPPE 500 E40

HQI 150W
165W
(power consumption)

Area: 10x10mt
Height: 5mt
31 lux

ECOBEPPE 500 E27

GRAND SIZE

Modern luminaries made of shockproof resin material, UV-rays stabilized, rust and corrosion-free. Suitable for post top or wall installation. Supplied with flat diffuser granting no upward light emission. Provided with high temperature resistant ceiling suitable for horizontal bulb fixation and with aluminum reflector to optimize the light distribution. Designed according to the international regulations against light pollution (standard UNI 10819 – Intallation area: Zone 1). Insulation class II, Protection rating IP65.

Diffusore moderno realizzato in resina antiurto, stabilizzato ai raggi UV, inattaccabile da ruggine e corrosione. Idoneo per il montaggio a palo o a parete. Fornito con diffusore piatto per garantire assenza di emissioni di luce verso l'alto. Provvisto di soffitto ad alta resistenza al calore idoneo per orizzontale della lampadina e completo di parabola riflettente in alluminio per direzionare il flusso luminoso. Progettato in ottemperanza alle norme internazionali contro l'inquinamento luminoso (standard UNI 10819 – Area di installazione: Zona 1). Classe di isolamento II, grado di protezione IP65.

EP6.000.E27

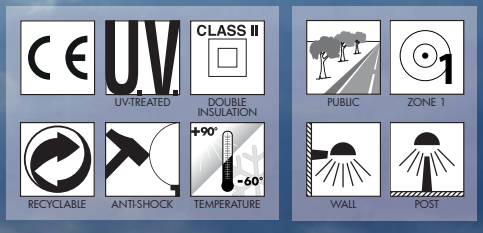

MADE IN ITALY

ECOBEPPE 500 E27 - E40 - COMPONENTS

IP65



ROOF complete with decorative pinnacle made of shockproof resin material, UV-rays stabilized, rust and corrosion-free.
TETTO *completo di pinnacolo decorativo realizzato in resina antiurto, stabilizzata ai raggi UV, inattaccabile da ruggine e corrosione.*

High temperature resistant **CEILING** made of white polycarbonate (PC), UV-rays stabilized, suitable for ballast fixation on its upper side and provided with E27 or E40 lampholder on its lower side. Bulb in horizontal position.

SOFFITTO *realizzato in policarbonato bianco (PC) ad alta resistenza al calore, stabilizzato ai raggi UV, nella cui parte superiore vengono fissati i reattori. Fornito completo di portalampada E27 o E40 atto a sostenere la lampadina in posizione orizzontale.*

Parabolic **REFLECTOR** made of anodized aluminium, designed to optimize the light distribution and to limit the skyward dispersion of the luminous flux.

PARABOLA *riflettente realizzata in alluminio anodizzato, progettata per ottimizzare la distribuzione del flusso luminoso e limitarne la dispersione verso il cielo.*

DIFFUSER with flat shape to avoid the skyward dispersion of the luminous flux, according to the international regulations against light pollution and in particular the standard UNI 108119. Made of UV-rays stabilized polycarbonate (PC).

DIFFUSORE *con configurazione piatta per evitare la dispersione verso il cielo del flusso luminoso, in ottemperanza alle norme internazionali sull'inquinamento luminoso ed in particolare la norma UNI 10819. Realizzato in policarbonato (PC), stabilizzato ai raggi UV.*

CAGE for post top installation complete with connection ring (one piece only) to be fixed on the luminaries diffuser.
BIPODE *in un unico pezzo completo di anello di connessione da fissare sul diffusore dell'apparecchio.*

ECOBEPPE 500 E27

EP6.000 *



Dimensions and weight
Height: 850 mm
Diameter: 600 mm
Weight: 6,5Kg
Junction to support: diameter 60 mm
Area expose to wind pressure:
CxS = m^2 0,246

Moulded colours:
Black *White* *Grey*
Diffuser PC (UV treated):
Clear

E27-E40

		*ADD. SUFFIX
 Luminaries supplied with E27 or E40 lampholder. Metal plate for ballast fixation available as an option (H.BAL.PLT)	suitable lamps: CFL-LED SON-HQI max 150W	**E27** Lampholder only	.E27
		E40 Lampholder only	.E40

** ADD THESE SUFFIXES TO THE REFERENCES MENTIONED IN THE CATALOGUE*

PHOTOMETRIC DATA SAMPLE

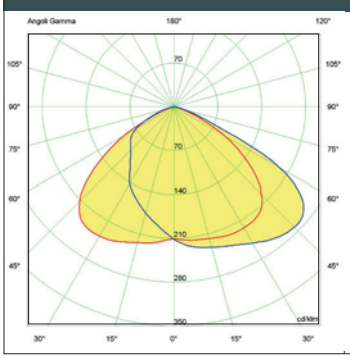

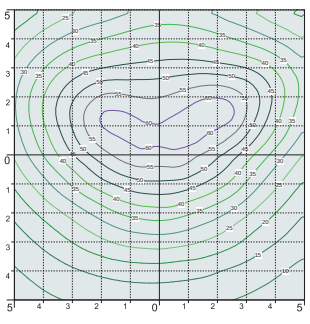

BEPPE 500 *clear HQI 150W.*

POST height 5mt
10x10mt area: average 31 lux

The photometric data for all the versions are available upon request or on our website.

ECOBEPPE 500

GRAND SIZE





MADE IN ITALY

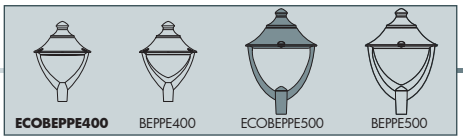

ECOBEPPE 500

GRAND SIZE

EKTOR 6000/ECOBEPPE500

EP6.384.000

Pcs 1
Kg 83,1
mc 1,41

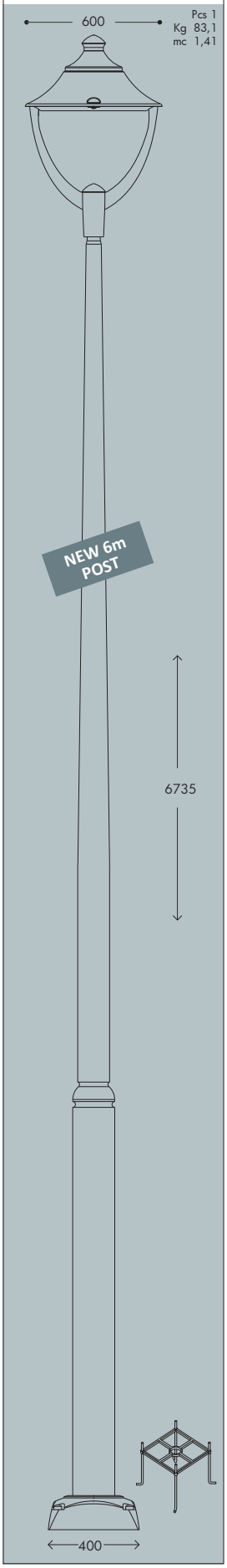

EKTOR 5000/ECOBEPPE500 | AKILLE 5000/ECOBEPPE500

EP6.377.000 | EP6.427.000

Pcs 1
Kg 53,6
mc 0,48

EKTOR 4500/ECOBEPPE500 | EKTOR 4500/ECOBEPPE500

EP6.374.000 | EP6.424.000

Pcs 1
Kg 48,1
mc 0,46

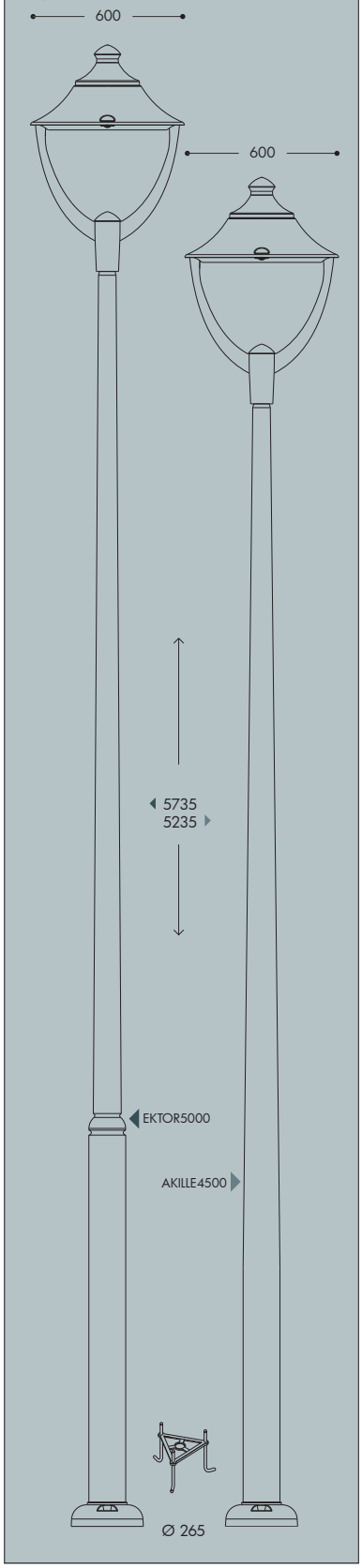

EKTOR 4000/ECOBEPPE500 | AKILLE 4000/ECOBEPPE500

EP6.371.000 | EP6.421.000

Pcs 1
Kg 42,6
mc 0,43

EKTOR 3500/ECOBEPPE500 | AKILLE 3500/ECOBEPPE500

EP6.367.000 | EP6.417.000

Pcs 1
Kg 39,2
mc 0,40

EKTOR 3000/ECOBEPPE500 | AKILLE 3000/ECOBEPPE500

EP6.364.000 | EP6.414.000

Pcs 1
Kg 35,8
mc 0,38

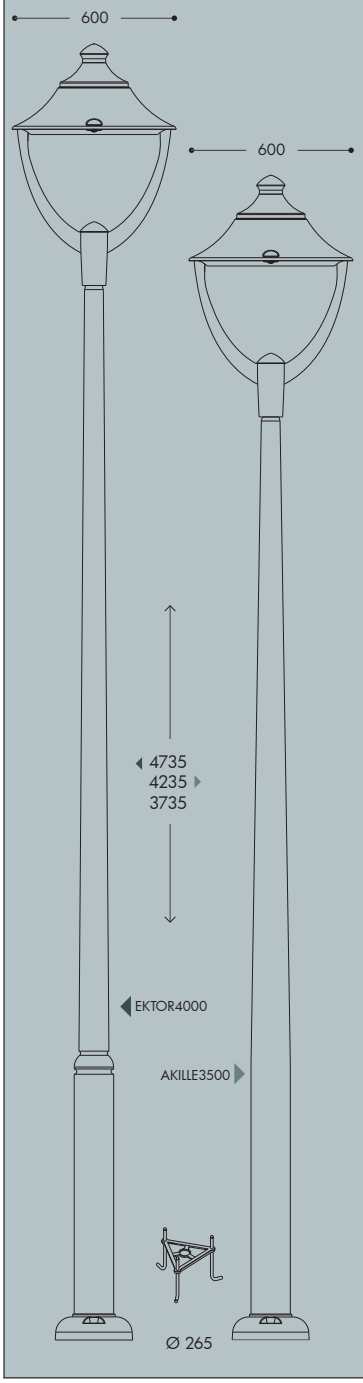

ECOBEPPE500

EP6.000

Pcs 1
Kg 8,1
mc 0,20

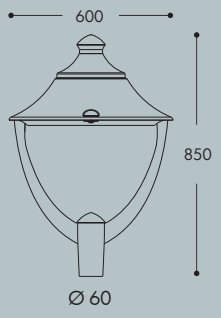

PILAR/ECOBEPPE500

EP6.253

Pcs 1
Kg 10,1
mc 0,24

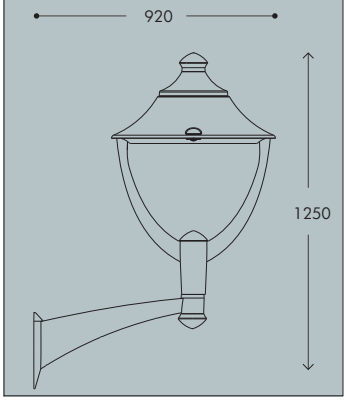

NEW LOT/ECOBEPPE500

EP6.115

Pcs 1
Kg 8,4
mc 0,21

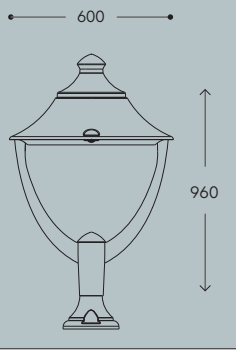

REMO 500 GX53 LED

GRAND SIZE

Modern luminaries made of shockproof resin material, UV-rays stabilized, rust and corrosion-free. Suitable for post top or wall installation. Equipped with TÜV approved, long-life and efficient **GX53 LED modular system** in different wattages. Insulation class II, Protection rating IP65.

*Diffusore moderno realizzato in resina antiurto, stabilizzato ai raggi UV, inattaccabile da ruggine e corrosione. Idoneo per il montaggio a palo o a parete. Provvisto di **sistema modulare a LED GX53** approvato TÜV di lunga durata ed alta efficienza disponibile in diverse potenze. Classe di isolamento II, grado di protezione IP65.*



R60.000.D9L

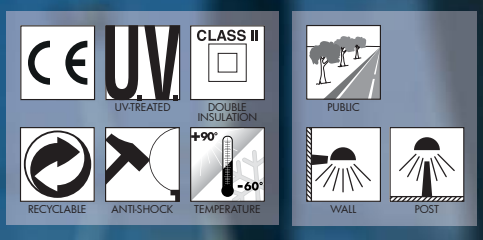

REMO 500 GX53 LED - COMPONENTS

IP65



ROOF complete with decorative pinnacle made of shockproof resin material, UV-rays stabilized, rust and corrosion-free.

TETTO *completo di pinnacolo decorativo, realizzato in resina antiurto, stabilizzata ai raggi UV, inattaccabile da ruggine e corrosione.*

DIFFUSERmade of UV-rays stabilized polymethylmethacrylate (PMMA), one piece only, available in clear or opal colour.

DIFFUSORE *realizzato in polimetilmetacrilato (PMMA) stabilizzato ai raggi UV, disponibile in colore trasparente o opale.*

Decorative connection **RING** to be fixed on the luminaries diffuser.

ANELLO *decorativo di connessione da fissare sul diffusore dell'apparecchio.*

BASE made in shockproof resin material consisting of a support for post top installation (Ø 60mm) and of a white resin **CONE REFLECTOR**, to direct downwards the lighting output. A silicone rubber gasket assures the protection against external agents.

BASE *dell'apparecchio realizzata in resina antiurto composta da un supporto per permettere il fissaggio dell'apparecchio a palo (Ø 60mm) e da un* ***CONO*** *riflettente in resina bianca per indirizzare verso il basso il flusso luminoso. Una guarnizione in gomma siliconica garantisce la protezione dagli agenti esterni.*

REMO 500 GX53 LED

R60.000 *



Dimensions and weight
Height: 850 mm
Diameter: 600 mm
Weight: 9 Kg
Junction to support: diameter 60 mm
Area expose to wind pressure:
CxS = m^2 0,238

Moulded colours:
Black *White* *Grey*
Diffuser PMMA:
Clear *Opal*

GX53 LED



- **COST SAVING:** long-life and efficient LED light sources.
- **BUILT-IN DRIVER:** quick and easy lamp replacement
- **GREAT FLEXIBILITY:** GX53 standard lamp holder.
- **FUTURE-PROOFED LUMINARIES:** performances easy to upgrade to latest technology developments.
- **SUITABLE FOR OUTDOOR USE:** built-in driver fully protected against heat and humidity by silicone paste.

Luminaries supplied with white resin CEILING provided with TÜV approved, long-life and efficient **9x GX53 LED lamps included**. Each lamp can be quickly and easily replaced individually, making the luminaries maintenance very simple.



			*ADD. SUFFIX
9x 7W **63W**	**7200 Lm**	4000 K	.C9L
		3000 K	.C9R
9x 10W **90W**	**10800 Lm**	4000 K	.D9L
		3000 K	.D9R

LED LAMPS

More technical details about TÜV approved Fumagalli LED Lamps on page 512.

** ADD THESE SUFFIXES TO THE REFERENCES MENTIONED IN THE CATALOGUE*

PHOTOMETRIC DATA SAMPLE - REMO 500 GX53 LED

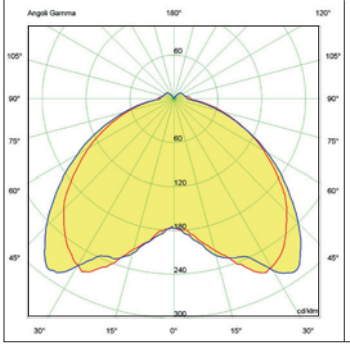

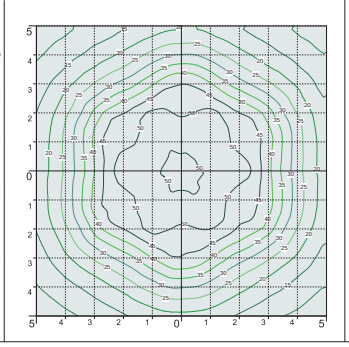

SAVE -62%

9x7W GX53 LED **63W** (power consumption)

Area: 10x10mt
Height: 5mt
20 lux

=

REMO 500 E40

HQI 150W **165W** (power consumption)

Area: 10x10mt
Height: 5mt
19 lux

REMO 500 E27

GRAND SIZE

Modern luminaries made of shockproof resin material, UV-rays stabilized, rust and corrosion-free. Suitable for post top or wall installation. Provided with aluminum reflector to optimize the light distribution. Base equipped with E27 or E40 lampholder and prepared for louvre fixation. Insulation class II, Protection rating IP65.

Diffusore moderno realizzato in resina antiurto, stabilizzato ai raggi UV, inattaccabile da ruggine e corrosione. Idoneo per il montaggio a palo o a parete. Provvisto di parabola riflettente in alluminio per direzionare il flusso luminoso. Base con portalampada E27 o E40 predisposta per il fissaggio del frangiluce. Idoneo per il montaggio a palo e a parete. Classe di isolamento II, grado di protezione IP65.



R60.000.E27FC6

MADE IN ITALY

REMO 500 E27 - E40 - COMPONENTS



ROOF complete with decorative pinnacle made of shockproof resin material, UV-rays stabilized, rust and corrosion-free.

TETTO *completo di pinnacolo decorativo, realizzato in resina antiurto, stabilizzato ai raggi UV, inattaccabile da ruggine e corrosione.*

Parabolic **REFLECTOR** made of anodized aluminium and fixed under the luminaries roof, designed to optimize the light efficiency performance and to allow a uniform light distribution.

PARABOLA *riflettente realizzata in alluminio anodizzato, fissata sotto il tetto del diffusore, progettata per ottimizzare il rendimento luminoso e permettere una uniforme distribuzione della luce.*

DIFFUSER made of UV-rays stabilized polymethylmethacrylate (PMMA), one piece only, available in clear or opal colour.

DIFFUSORE *realizzato in polimetilmetacrilato (PMMA) stabilizzato ai raggi UV, un pezzo unico, disponibile in colore trasparente o opale.*



Chrome aluminium **LOUVRE** with a laminar symmetrical optic system to direct the lighting output and to get a lower dazzle (optional).

FRANGILUCE *in alluminio cromato con sistema ottico lamellare a ripartizione simmetrica per orientare il fascio di luce e ridurre l'abbagliamento (opzionale).*

Resin **BASE** consisting of a support (Ø 60mm) and of a cover suitable for ballast fixation on its lower side and provided with E27 or E40 lampholder on its upper side. A rubber gasket assures the protection of the electrical accessories seat against external agents.

BASE *in resina composta da un supporto e da un coperchio nella cui parte inferiore possono essere fissati i reattori e nella cui parte superiore si trova l'alloggiamento per il portalampada E27 o E40 (incluso). Una guarnizione in gomma garantisce la protezione dell'alloggiamento degli accessori elettrici dagli agenti esterni.*

REMO 500 E27

R60.000 *



Dimensions and weight
Height: 850 mm
Diameter: 600 mm
Weight: 6,5 Kg
Junction to support: diameter 60 mm
Area expose to wind pressure:
CxS = m² 0,238

Moulded colours:
Black *White* *Grey*

Diffuser PMMA:
Clear *Opal*

CHROME ALUMINIUM LOUVRE

H.FC6 open
Upward position



E27-E40

		*ADD. SUFFIX
 Luminaries supplied with E27 or E40 lampholder. Metal plate for ballast fixation available as an option (H.BAL.PLT)	suitable lamps: CFL-LED SON-HQI max 150W	**E27** Lampholder only	.E27
		E40 Lampholder only	.E40

** ADD THESE SUFFIXES TO THE REFERENCES MENTIONED IN THE CATALOGUE*

PHOTOMETRIC DATA SAMPLE

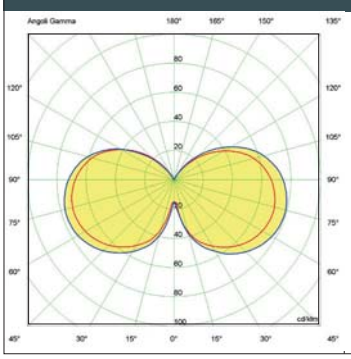

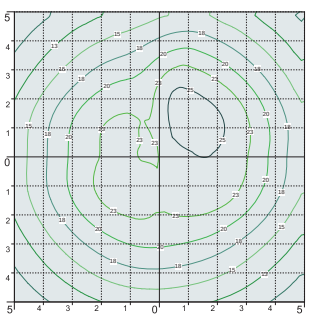

REMO 500 *clear HQI 150W.*

POST height 5mt
10x10mt area: average 19 lux

The photometric data for all the versions are available upon request or on our website.

REMO 500

GRAND SIZE



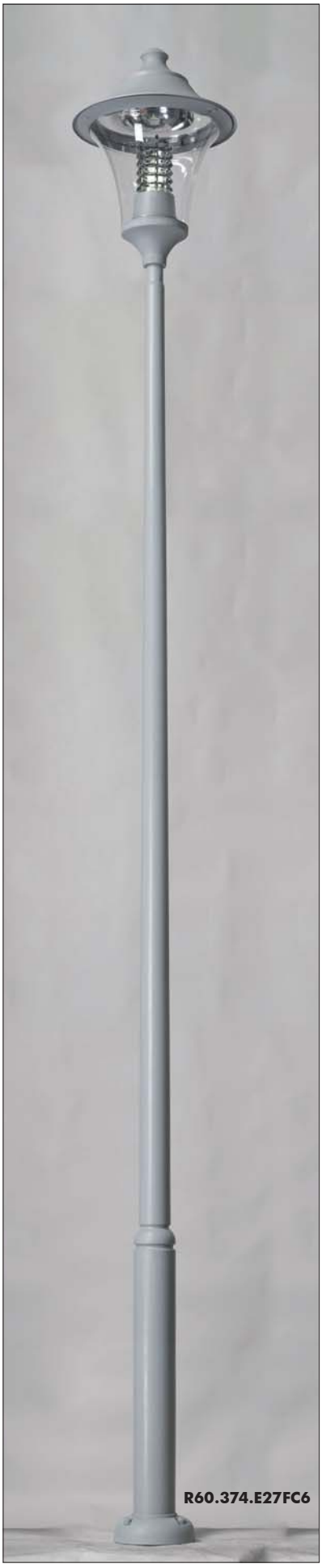





MADE IN ITALY

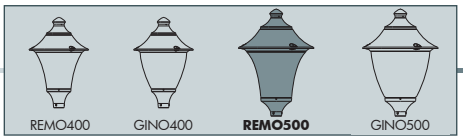

REMO 500

GRAND SIZE

EKTOR 6000/REMO500

R60.384.000

Pcs 1
Kg 84
mc 1,32

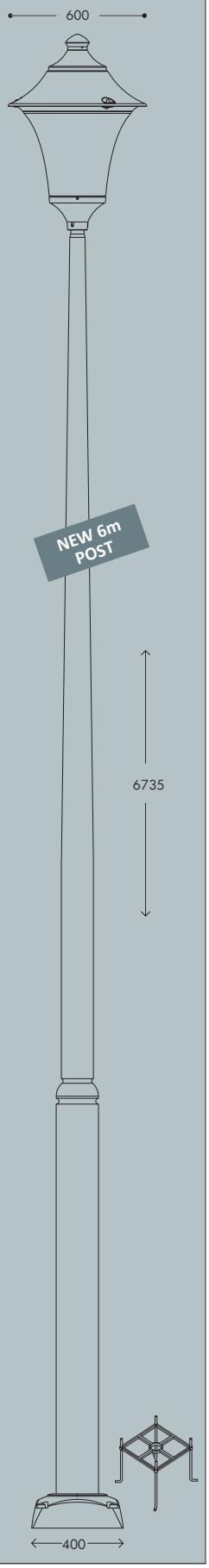

EKTOR 5000/REMO500 | AKILLE 5000/REMO500

R60.377.000 | R60.427.000

Pcs 1
Kg 54,5
mc 0,39

EKTOR 4500/REMO500 | AKILLE 4500/REMO500

R60.374.000 | R60.424.000

Pcs 1
Kg 49
mc 0,36

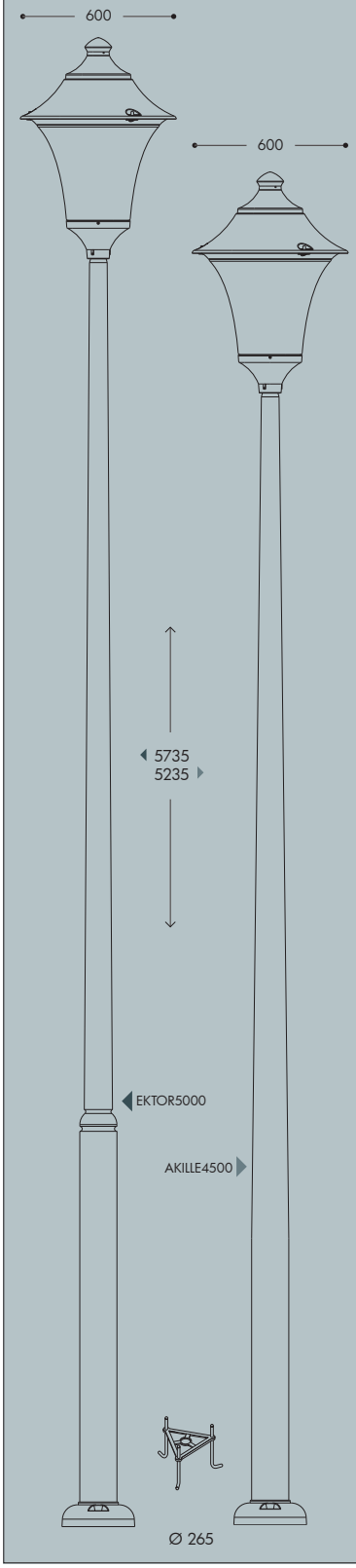

EKTOR 4000/REMO500 | AKILLE 4000/REMO500

R60.371.000 | R60.421.000

Pcs 1
Kg 43,5
mc 0,33

EKTOR 3500/REMO500 | AKILLE 3500/REMO500

R60.367.000 | R60.417.000

Pcs 1
Kg 40,1
mc 0,31

EKTOR 3000/REMO500 | AKILLE 3000/REMO500

R60.364.000 | R60.414.000

Pcs 1
Kg 36,7
mc 0,28

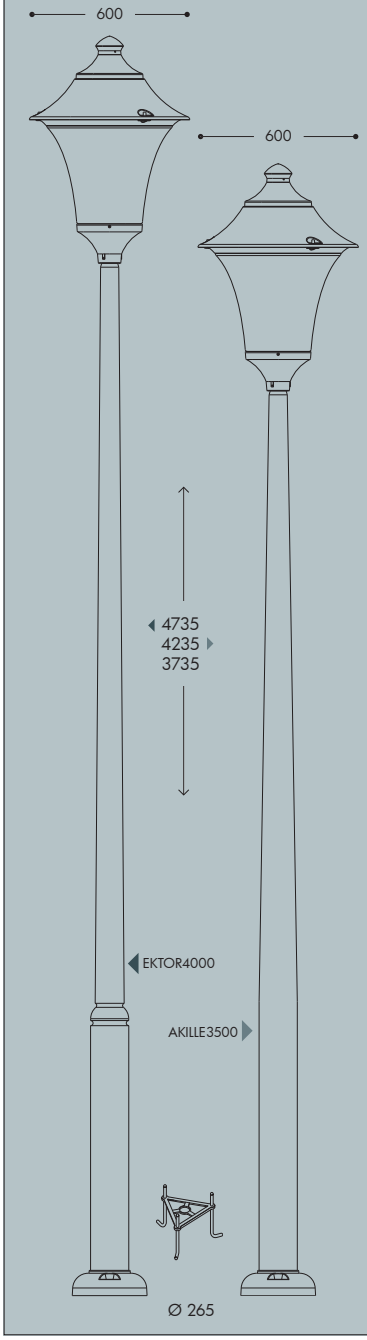

REMO500

R60.000

Pcs 1
Kg 9
mc 0,11

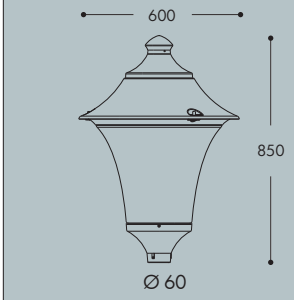

PILAR/REMO500

R60.253

Pcs 1
Kg 11
mc 0,14

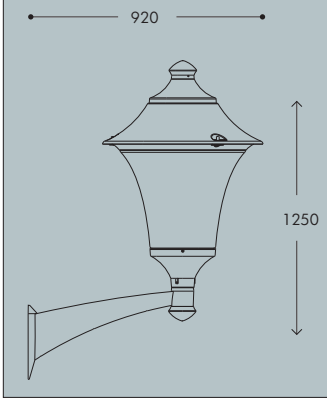

NEW LOT/REMO500

R60.115

Pcs 1
Kg 9,3
mc 0,12

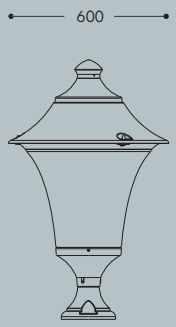

GINO 500 GX53 LED

GRAND SIZE

Modern luminaries made of shockproof resin material, UV-rays stabilized, rust and corrosion-free. Suitable for post top or wall installation. Equipped with TÜV approved, long-life and efficient **GX53 LED modular system** in different wattages. Insulation class II, Protection rating IP65.

*Diffusore moderno realizzato in resina antiurto, stabilizzato ai raggi UV, inattaccabile da ruggine e corrosione. Idoneo per il montaggio a palo o a parete. Provvisto di **sistema modulare a LED GX53** approvato TÜV di lunga durata ed alta efficienza disponibile in diverse potenze. Classe di isolamento II, grado di protezione IP65.*



F60.000.D9L

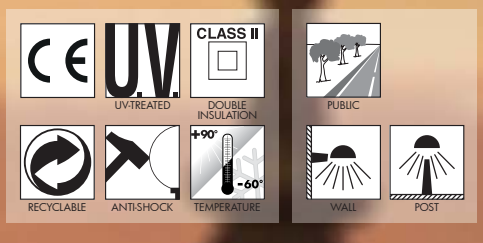

MADE IN ITALY

GINO 500 GX53 LED - COMPONENTS

IP65



ROOF complete with decorative pinnacle made of shockproof resin material, UV-rays stabilized, rust and corrosion-free.

TETTO *completo di pinnacolo decorativo, realizzato in resina antiurto, stabilizzata ai raggi UV, inattaccabile da ruggine e corrosione.*

DIFFUSER made of UV-rays stabilized polymethylmethacrylate (PMMA), one piece only, available in clear or opal colour.

DIFFUSORE *realizzato in polimetilmetacrilato (PMMA) stabilizzato ai raggi UV, disponibile in colore trasparente o opale.*

Decorative connection **RING** to be fixed on the luminaries diffuser.

ANELLO decorativo di connessione da fissare sul diffusore dell'apparecchio.

BASE made in shockproof resin material consisting of a support for post top installation (Ø 60mm) and of a white resin CONE REFLECTOR, to direct downwards the lighting output. A silicone rubber gasket assures the protection against external agents.

BASE *dell'apparecchio realizzata in resina antiurto composta da un supporto per permettere il fissaggio dell'apparecchio a palo (Ø 60mm) e da un CONO riflettente in resina bianca per indirizzare verso il basso il flusso luminoso. Una guarnizione in gomma siliconica garantisce la protezione dagli agenti esterni.*

GINO 500 GX53 LED

F60.000 *



Dimensions and weight
Height: 850 mm
Diameter: 600 mm
Weight: 9,8 Kg
Junction to support: diameter 60 mm
Area expose to wind pressure:
CxS = m^2 0,262

Moulded colours:
Black *White* *Grey*

Diffuser PMMA:
Clear *Opal*

GX53 LED



- **COST SAVING:** long-life and efficient LED light sources.
- **BUILT-IN DRIVER:** quick and easy lamp replacement
- **GREAT FLEXIBILITY:** GX53 standard lamp holder.
- **FUTURE-PROOFED LUMINARIES:** performances easy to upgrade to latest technology developments.
- **SUITABLE FOR OUTDOOR USE:** built-in driver fully protected against heat and humidity by silicone paste.

Luminaries supplied with white resin CEILING provided with TÜV approved, long-life and efficient **9x GX53 LED lamps included**. Each lamp can be quickly and easily replaced individually, making the luminaries maintenance very simple.



			*ADD. SUFFIX
9x 7W **63W**	**7200 Lm**	4000 K	.C9L
		3000 K	.C9R
9x 10W **90W**	**10800 Lm**	4000 K	.D9L
		3000 K	.D9R

** ADD THESE SUFFIXES TO THE REFERENCES MENTIONED IN THE CATALOGUE*

LED LAMPS

More technical details about TÜV approved Fumagalli LED Lamps on page 512.

PHOTOMETRIC DATA SAMPLE - GINO 500 GX53 LED

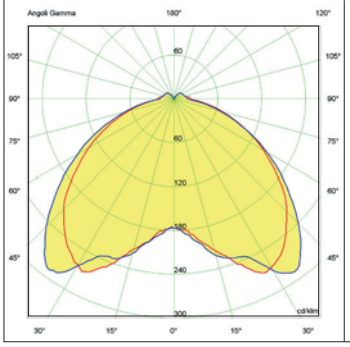

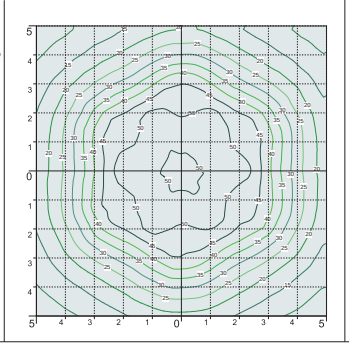

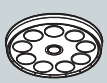

SAVE **-62%**

9x7W GX53 LED
63W
(power consumption)

Area: 10x10mt
Height: 5mt
20 lux

=

GINO 500 E40



HQI 150W
165W
(power consumption)

Area: 10x10mt
Height: 5mt
19 lux

GINO 500 E27

GRAND SIZE

Modern luminaries made of shockproof resin material, UV-rays stabilized, rust and corrosion-free. Suitable for post top or wall installation. Provided with aluminum reflector to optimize the light distribution. Base equipped with E27 or E40 lampholder and prepared for louvre fixation. Insulation class II, Protection rating IP65.

Diffusore moderno realizzato in resina antiurto, stabilizzato ai raggi UV, inattaccabile da ruggine e corrosione. Idoneo per il montaggio a palo o a parete. Provvisto di parabola riflettente in alluminio per direzionare il flusso luminoso. Base con portalampada E27 o E40 predisposta per il fissaggio del frangiluce. Idoneo per il montaggio a palo e a parete. Classe di isolamento II, grado di protezione IP65.



F60.000.E27FC6

MADE IN ITALY

GINO 500 E27 - E40 - COMPONENTS

IP65



ROOF complete with decorative pinnacle made of shockproof resin material, UV-rays stabilized, rust and corrosion-free.

TETTO *completo di pinnacolo decorativo, realizzato in resina antiurto, stabilizzato ai raggi UV, inattaccabile da ruggine e corrosione.*

Parabolic **REFLECTOR** made of anodized aluminium and fixed under the luminaries roof, designed to optimize the light efficiency performance and to allow a uniform light distribution.

PARABOLA *riflettente realizzata in alluminio anodizzato, fissata sotto il tetto del diffusore, progettata per ottimizzare il rendimento luminoso e permettere una uniforme distribuzione della luce.*

DIFFUSER made of UV-rays stabilized polymethylmethacrylate (PMMA), one piece only, available in clear or opal colour.

DIFFUSORE *realizzato in polimetilmetacrilato (PMMA) stabilizzato ai raggi UV, un pezzo unico, disponibile in colore trasparente o opale.*



Chrome aluminium **LOUVRE** with a laminar symmetrical optic system to direct the lighting output and to get a lower dazzle (optional).

FRANGILUCE *in alluminio cromato con sistema ottico lamellare a ripartizione simmetrica per orientare il fascio di luce e ridurre l'abbagliamento (opzionale).*

Luminaries **BASE** consisting of a support (Ø 60mm) and of a cover suitable for ballast fixation on its lower side and provided with E27 or E40 lampholder on its upper side. A rubber gasket assures the protection of the electrical accessories seat against external agents.

BASE *in resina composta da un supporto e da un coperchio nella cui parte inferiore possono essere fissati i reattori e nella cui parte superiore si trova l'alloggiamento per il portalampada E27 o E40 (incluso). Una guarnizione in gomma garantisce la protezione dell'alloggiamento degli accessori elettrici dagli agenti esterni.*

GINO 500 E27

F60.000 *



Dimensions and weight
Height: 850 mm
Diameter: 600 mm
Weight: 7,3 Kg
Junction to support: diameter 60 mm
Area expose to wind pressure:
CxS = m^2 0,262

Moulded colours:
Black *White* *Grey*

Diffuser PMMA:
Clear *Opal*

CHROME ALUMINIUM LOUVRE

H.FC6 open
Upward position



E27-E40

		*ADD. SUFFIX
 Luminaries supplied with E27 or E40 lampholder. Metal plate for ballast fixation available as an option (H.BAL.PLT)	suitable lamps: CFL-LED SON-HQI max 150W	**E27** Lampholder only	.E27
		E40 Lampholder only	.E40

** ADD THESE SUFFIXES TO THE REFERENCES MENTIONED IN THE CATALOGUE*

PHOTOMETRIC DATA SAMPLE

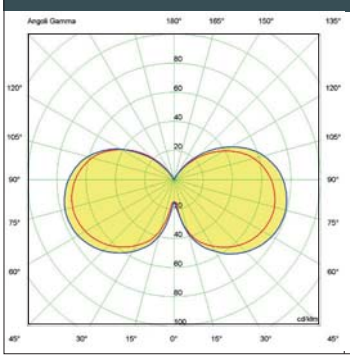

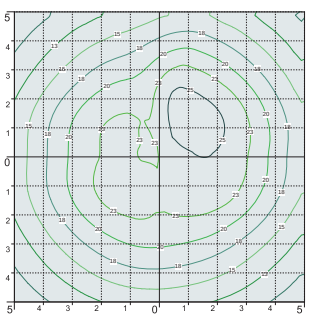

GINO 500 *clear HQI 150W.*

POST height 5mt
10x10mt area: average 19 lux

The photometric data for all the versions are available upon request or on our website.

GINO 500

GRAND SIZE





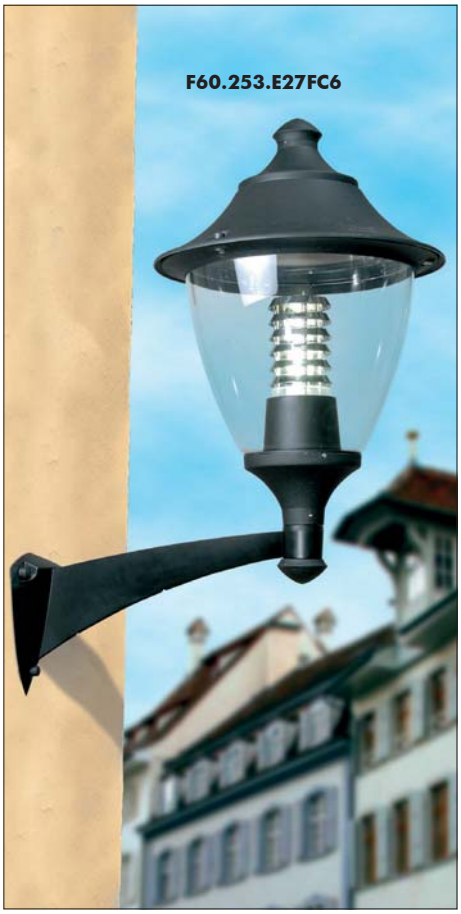



MADE IN ITALY

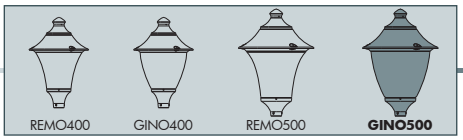

GINO 500

GRAND SIZE

EKTOR 6000/REMO500

F60.384.000

Pcs 1
Kg 84,8
mc 1,32

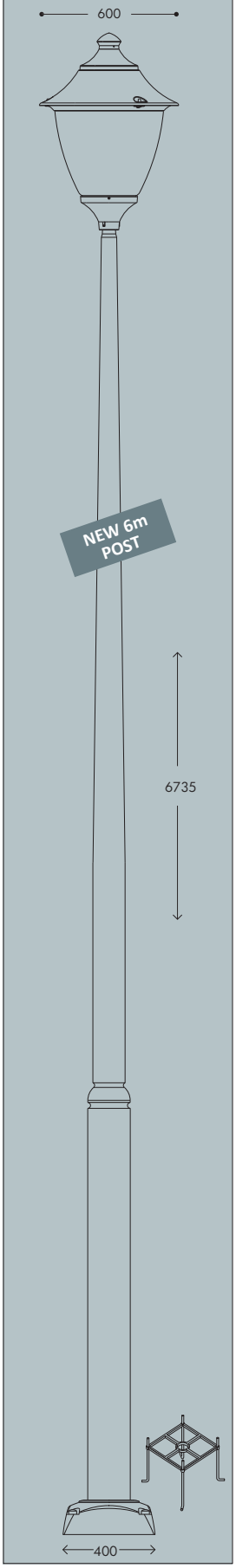

EKTOR 5000/REMO500 | AKILLE 5000/REMO500

F60.377.000 | F60.427.000

Pcs 1
Kg 55,3
mc 0,39

EKTOR 4500/REMO500 | AKILLE 4500/REMO500

F60.374.000 | F60.424.000

Pcs 1
Kg 49,8
mc 0,36

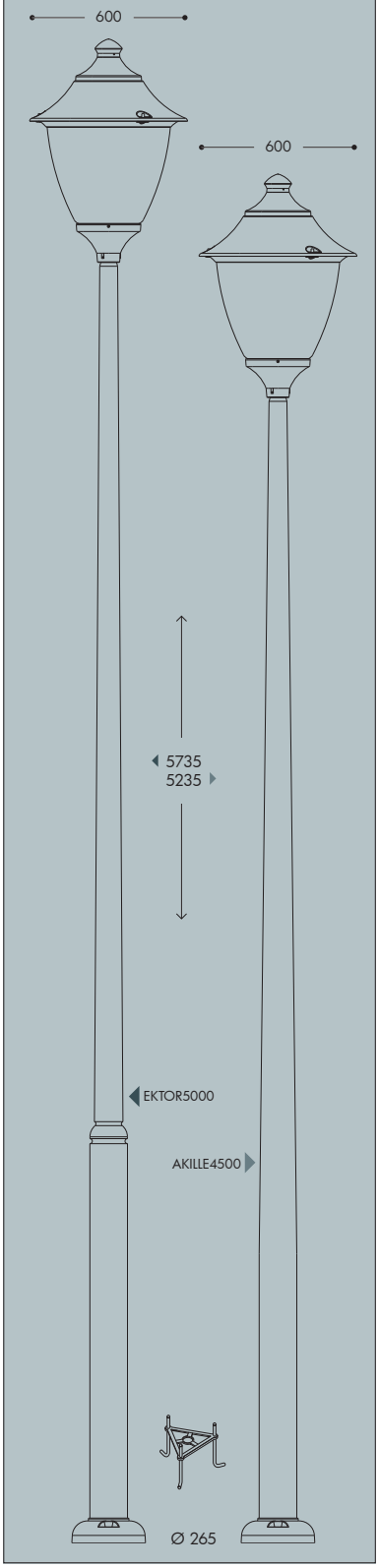

EKTOR 4000/REMO500 | AKILLE 4000/REMO500

F60.371.000 | F60.421.000

Pcs 1
Kg 44,3
mc 0,33

EKTOR 3500/REMO500 | AKILLE 3500/REMO500

F60.367.000 | F60.417.000

Pcs 1
Kg 40,9
mc 0,31

EKTOR 3000/REMO500 | AKILLE 3000/REMO500

F60.364.000 | F60.414.000

Pcs 1
Kg 37,5
mc 0,28

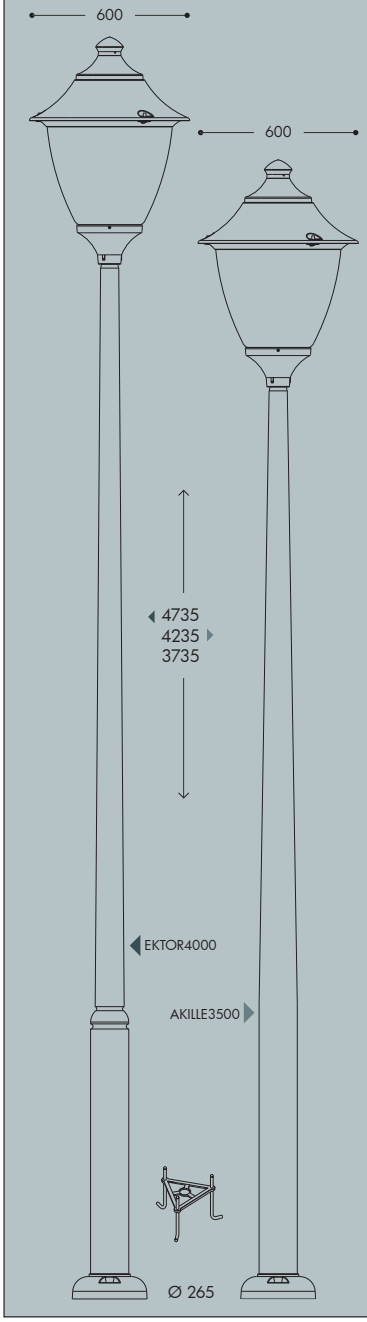

REMO500

F60.000

Pcs 1
Kg 9,8
mc 0,11

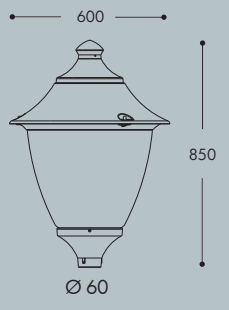

PILAR/REMO500

F60.253

Pcs 1
Kg 11,8
mc 0,14

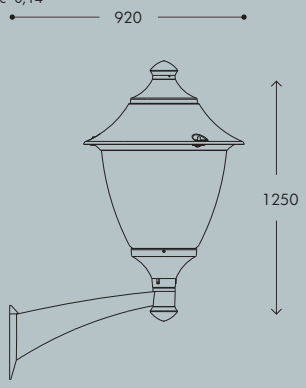

NEW LOT/REMO500

F60.115

Pcs 1
Kg 10,1
mc 0,12

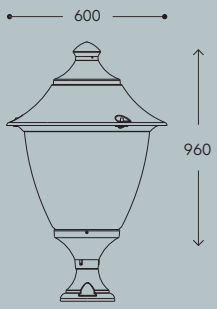

GLOBE 400 MODERN

LARGE SIZE

Ø 400 mm PMMA globe, complete with modern base made of shockproof resin material, UV-rays stabilized, rust and corrosion-free. Suitable for post top, hanging and wall installation. Base provided with E27 lampholder and prepared for louvre fixation. Insulation class II, protection rating IP65.

Globo Ø 400 mm in polimetilmetacrilato (PMMA) completo di base moderna realizzata in resina antiurto, stabilizzata ai raggi UV, inattaccabile da ruggine e corrosione. Idoneo per il montaggio a palo, a sospensione o a parete. Base fornita con portalampada E27 e predisposto per il fissaggio del frangiluce. Classe di isolamento II, grado di protezione IP65.



G41.B40.E27FC1

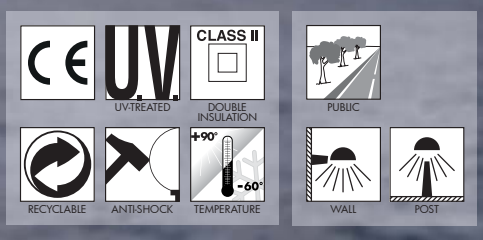

GLOBE 400 MODERN E27 - COMPONENTS

IP65



400 mm GLOBE made of UV-rays stabilized polymethylmethacrylate (PMMA), one piece only. Available in clear, opal or smoked colour.

GLOBO Ø 400 mm *in polimetilmetacrilato (PMMA), resistente all'ingiallimento ed ai raggi UV, realizzato in un unico pezzo. Disponibile nei colori trasparente, bianco o fumé.*

Clear (X) | Opal (Y) | Smoked (Z)

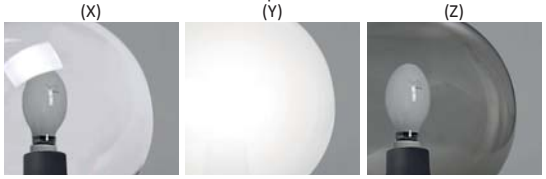

Chrome aluminium **LOUVRE** with a laminar symmetrical optic system to direct the lighting output and to get a lower dazzle (optional).

FRANGILUCE *in alluminio cromato con sistema ottico lamellare a ripartizione simmetrica per orientare il fascio di luce e ridurre l'abbagliamento (opzionale).*

Globe **BASE**, made of shockproof resin material, UV-rays stabilized, rust and corrosion-free, consisting of a support (Ø 60mm) and of a cover provided with E27 lampholder. A rubber gasket assures the protection of the electrical accessories seat against external agents.

BASE *del globo, realizzata in resina antiurto, stabilizzata ai raggi UV, inattaccabile da ruggine e corrosione. Composta da un supporto e da un coperchio in cui si trova l'alloggiamento per il portalampada E27 (incluso). Una guarnizione in gomma garantisce la protezione dell'alloggiamento degli accessori elettrici dagli agenti esterni.*

GLOBE 400 MODERN

G41.B40 *



Dimensions and weight
Height: 530 mm
Diameter: 400 mm
Weight: 2,1 Kg
Junction to support: diameter 60 mm
Area expose to wind pressure:
CxS = m² 0,122

Moulded colours: *
Black *White* *Grey*

Diffuser PMMA:
Clear *Opal* *Smoked*

CHROME ALUMINIUM LOUVRE

H.FC1 closed
Upward position



H.FC6 open
Downward position



** ADD THESE SUFFIXES TO THE REFERENCES MENTIONED IN THE CATALOGUE*

E27

		*ADD. SUFFIX
 Globe complete with modern base and E27 lampholder. Metal plate for ballast fixation available as an option (H.BAL.PLT)	suitable lamps: CFL-LED SON-HQI max 70W	**E27** Lampholder only	.E27

PHOTOMETRIC DATA SAMPLE

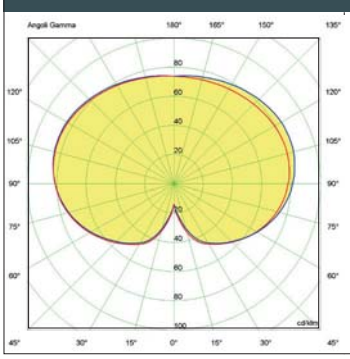

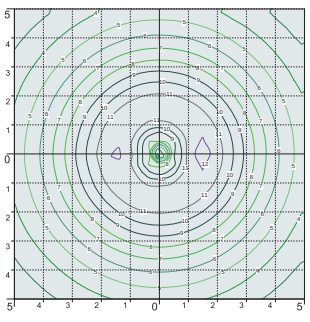

GLOBE 400 *opal HQI 70W.*

POST height 3,5mt
10x10mt area: average 7 lux

The photometric data for all the versions are available upon request or on our website.

GLOBE 400 MODERN

LARGE SIZE











MADE IN ITALY

EKTOR 2500/GLOBE400

G41.361.000

Pcs 1
Kg 26,4
mc 0,15

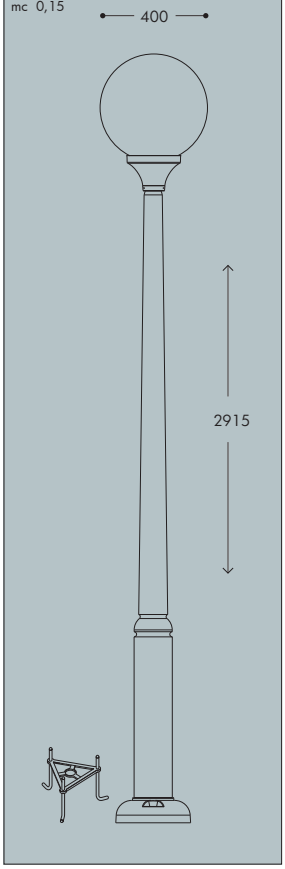

MIDIPILAR/GLOBE 400

G41.254

Pcs 1
Kg 2,7
mc 0,09

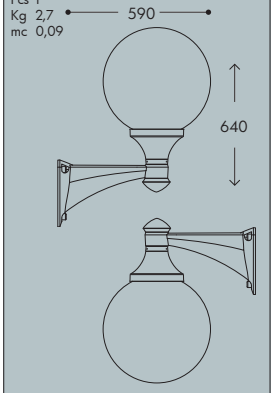

ILIO/GLOBE 400

G41.251

Pcs 1
Kg 2,7
mc 0,10

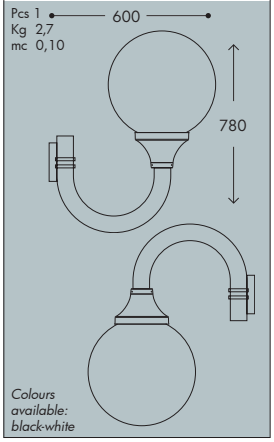

Colours available: black-white

NEW LOT/GLOBE 400

G41.115

Pcs 1
Kg 2,4
mc 0,07

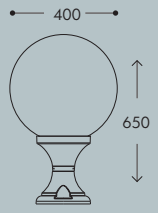

GLOBE 400

G41.B40

Pcs 2
Kg 4,2
mc 0,17

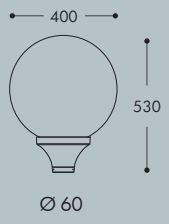

EKTOR 4000 MIDIPILAR/GLOBE400 1L

G41.371.A10

Pcs 1
Kg 37,9
mc 0,30

AKILLE 4000 MIDIPILAR/GLOBE400 1L

G41.421.A10

EKTOR 3500 MIDIPILAR/GLOBE400 1L

G41.367.A10

Pcs 1
Kg 34,5
mc 0,26

AKILLE 3500 MIDIPILAR/GLOBE400 1L

G41.417.A10

EKTOR 3000 MIDIPILAR/GLOBE400 1L

G41.364.A10

Pcs 1
Kg 31,1
mc 0,26

AKILLE 3000 MIDIPILAR/GLOBE400 1L

G41.414.A10

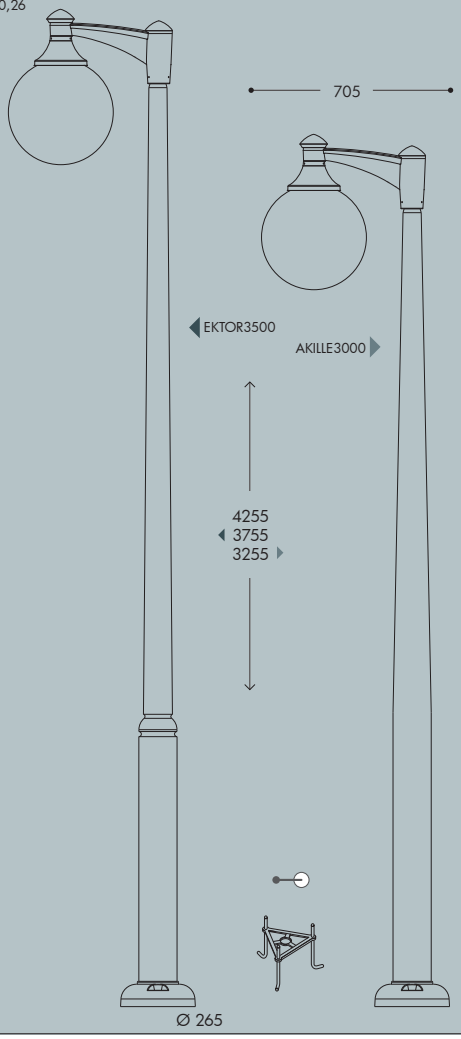

EKTOR 4000/GLOBE400

G41.371.000

Pcs 1
Kg 36,6
mc 0,21

AKILLE 4000/GLOBE400

G41.421.000

EKTOR 3500/GLOBE400

G41.367.000

Pcs 1
Kg 33,2
mc 0,19

AKILLE 3500/GLOBE400

G41.417.000

EKTOR 3000 /GLOBE400

G41.364.000

Pcs 1
Kg 29,8
mc 0,17

AKILLE 3000 /GLOBE400

G41.414.000

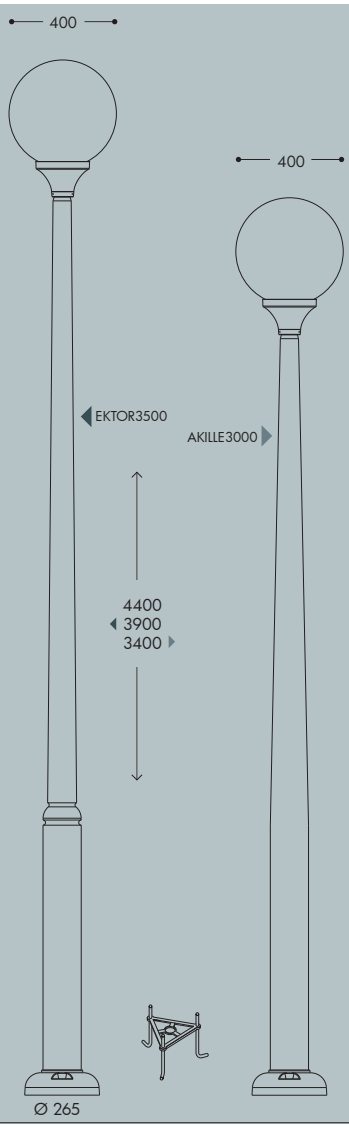

EKTOR 2500 MIDIPILAR/GLOBE400 1L

G41.361.A10

Pcs 1
Kg 27,7
mc 0,24

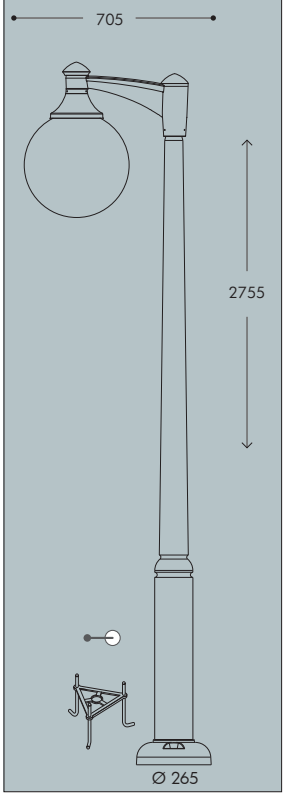

GLOBE 400 MODERN

LARGE SIZE





MADE IN ITALY

EKTOR 2500 MIDIPILAR/GLOBE400 3L
G41.361.A30

Pcs 1
Kg 33,4
mc 0,51

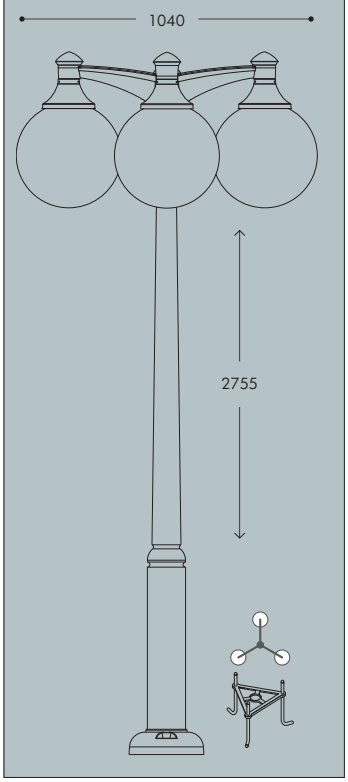

EKTOR 2500 MIDIPILAR/GLOBE400 2L
G41.361.A20

Pcs 1
Kg 30,6
mc 0,42

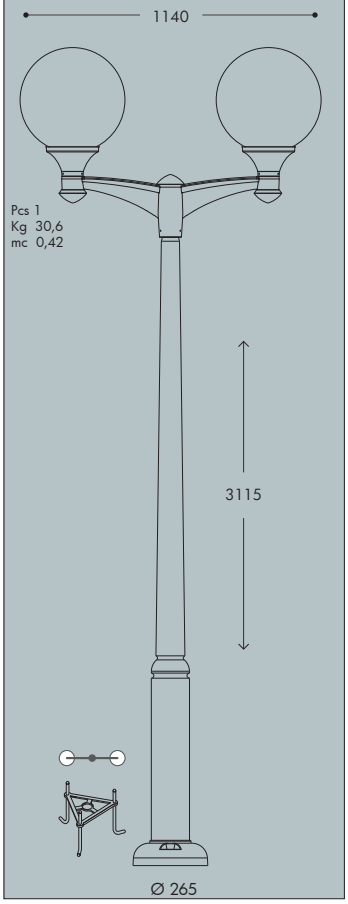

EKTOR 4000 MIDIPILAR/GLOBE400 2L	AKILLE 4000 MIDIPILAR/GLOBE400 2L
G41.371.A20	G41.421.A20

Pcs 1
Kg 40,8
mc 0,49

EKTOR 3500 MIDIPILAR/GLOBE400 2L	AKILLE 3500 MIDIPILAR/GLOBE400 2L
G41.367.A20	G41.417.A20

Pcs 1
Kg 37,4
mc 0,47

EKTOR 3000 MIDIPILAR/GLOBE400 2L	AKILLE 3000 MIDIPILAR/GLOBE400 2L
G41.364.A20	G41.414.A20

Pcs 1
Kg 34
mc 0,45

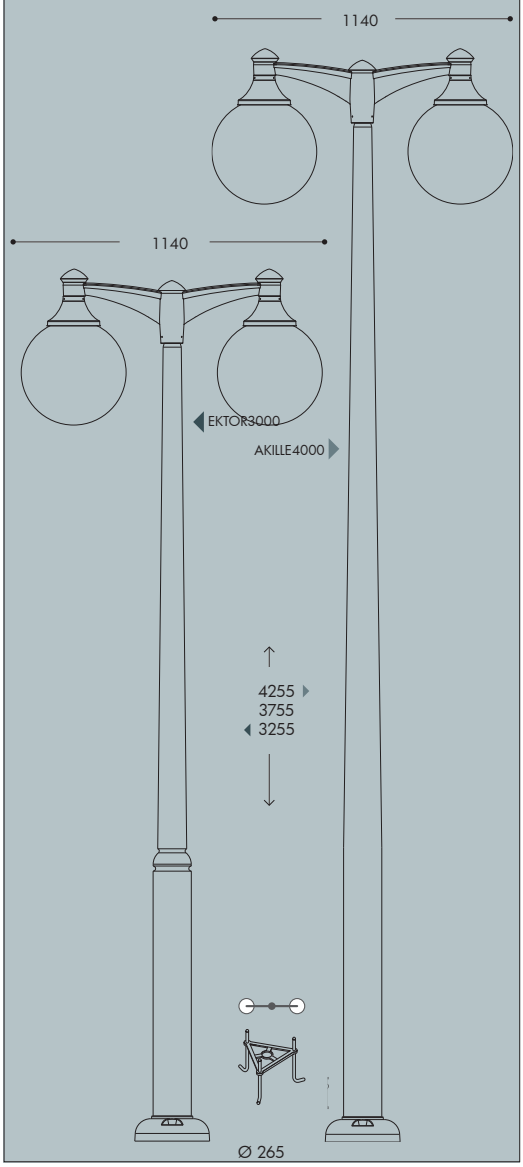

EKTOR 4000 MIDIPILAR/GLOBE400 3L	AKILLE 4000 MIDIPILAR/GLOBE400 3L
G41.371.A30	G41.421.A30

Pcs 1
Kg 43,6
mc 0,57

EKTOR 3500 MIDIPILAR/GLOBE400 3L	AKILLE 3500 MIDIPILAR/GLOBE400 3L
G41.367.A30	G41.417.A30

Pcs 1
Kg 40,2
mc 0,55

EKTOR 3000 MIDIPILAR/GLOBE400 3L	AKILLE 3000 MIDIPILAR/GLOBE400 3L
G41.364.A30	G41.414.A30

Pcs 1
Kg 36,8
mc 0,53

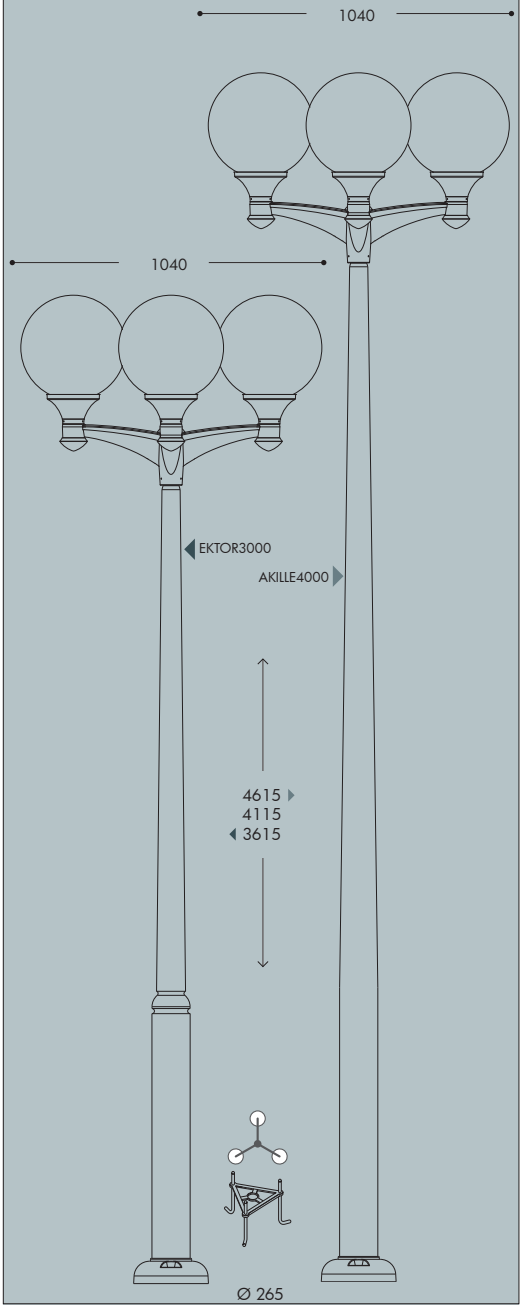

GLOBE 500 MODERN

GRAND SIZE

Ø 500 mm PMMA globe, complete with modern base made of shockproof resin material, UV-rays stabilized, rust and corrosion-free. Suitable for post top, hanging and wall installation. Base provided with E27 or E40 lampholder and prepared for louvre fixation. Insulation class II, protection rating IP65.

Globo Ø 500 mm in polimetilmetacrilato (PMMA) completo di base moderna realizzata in resina antiurto, stabilizzata ai raggi UV, inattaccabile da ruggine e corrosione. Idoneo per il montaggio a palo, a sospensione o a parete. Base fornita con portalampada E27 o E40 e predisposto per il fissaggio del frangiluce. Classe di isolamento II, grado di protezione IP65.



G51.B50.E27FC1

GLOBE 500 MODERN E27 - COMPONENTS

IP65



500 mm GLOBE made of UV-rays stabilized polymethylmethacrylate (PMMA), one piece only. Available in clear, opal or smoked colour.

GLOBO Ø 500 mm *in polimetilmetacrilato (PMMA), resistente all'ingiallimento ed ai raggi UV, realizzato in un unico pezzo. Disponibile nei colori trasparente, bianco o fumé*

Clear (X) | Opal (Y) | Smoked (Z)

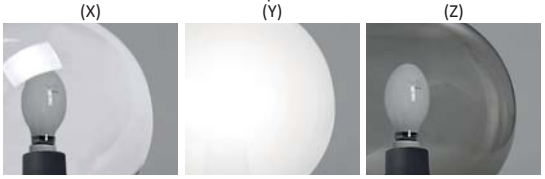

Chrome aluminium **LOUVRE** with a laminar symmetrical optic system to direct the lighting output and to get a lower dazzle (optional).

FRANGILUCE *in alluminio cromato con sistema ottico lamellare a ripartizione simmetrica per orientare il fascio di luce e ridurre l'abbagliamento (opzionale).*

Globe **BASE**, made of shockproof resin material, UV-rays stabilized, rust and corrosion-free, consisting of a support (Ø 60mm) and of a cover provided with E27 or E40 lampholder. A rubber gasket assures the protection of the electrical accessories seat against external agents.

BASE *del globo, realizzata in resina antiurto, stabilizzata ai raggi UV, inattaccabile da ruggine e corrosione. Composta da un supporto e da un coperchio in cui si trova l'alloggiamento per il portalampada E27 o E40 (incluso). Una guarnizione in gomma garantisce la protezione dell'alloggiamento degli accessori elettrici dagli agenti esterni.*

GLOBE 500

G51.B50 *



Dimensions and weight
Height: 640 mm
Diameter: 500 mm
Weight: 4 Kg
Junction to support: diameter 60 mm
Area expose to wind pressure:
CxS = m^2 0,181

Moulded colours:
Black *White* *Grey*

Diffuser PMMA:
Clear *Opal* *Smoked*

CHROME ALUMINIUM LOUVRE

H.FC1 closed
Upward position



H.FC6 open
Downward position



** ADD THESE SUFFIXES TO THE REFERENCES MENTIONED IN THE CATALOGUE*

E27-E40

		*ADD. SUFFIX
 Globe complete with modern base and E27 lampholder. Metal plate for ballast fixation available as an option (H.BAL.PLT)	suitable lamps: CFL-LED SON-HQI max 100W	**E27** Lampholder only	.E27
		E40 Lampholder only	.E40

PHOTOMETRIC DATA SAMPLE

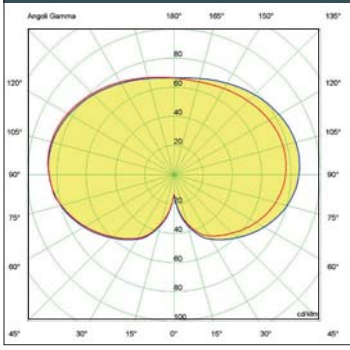

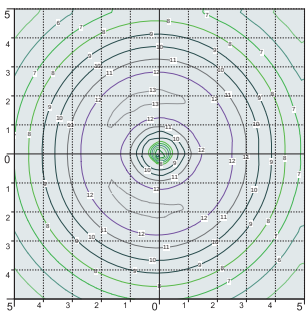

GLOBE 500 *opal HQI 100.*

POST height 4,5mt
10x10mt area: average 9 lux

The photometric data for all the versions are available upon request or on our website.

GLOBE 500 MODERN

GRAND SIZE









MADE IN ITALY

NEW LOT/GLOBE500

G51.115

Pcs 1
Kg 4,3
mc 0,15

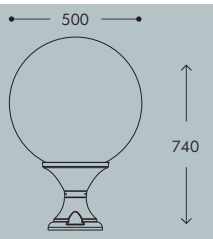

EKTOR 5000/ GLOBE500	AKILLE 5000/ GLOBE500
G51.377.000	G51.427.000

Pcs 1
Kg 49,5
mc 0,42

EKTOR 4500/ GLOBE500	AKILLE 4500/ GLOBE500
G51.374.000	G51.424.000

Pcs 1
Kg 44
mc 0,39

EKTOR 4000/ GLOBE500	AKILLE 4000/ GLOBE500
G51.371.000	G51.421.000

Pcs 1
Kg 38,5
mc 0,37

EKTOR 3500/ GLOBE500	AKILLE 3500/ GLOBE500
G51.367.000	G51.417.000

Pcs 1
Kg 35,1
mc 0,34

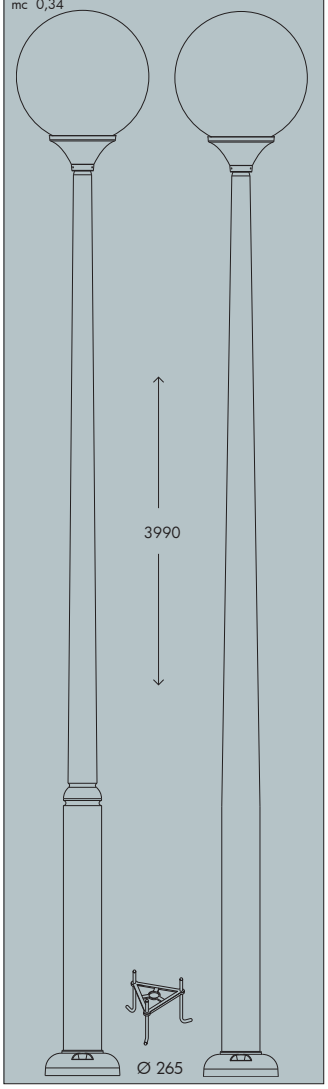

PILAR/GLOBE500

G51.253

Pcs 1
Kg 6
mc 0,17

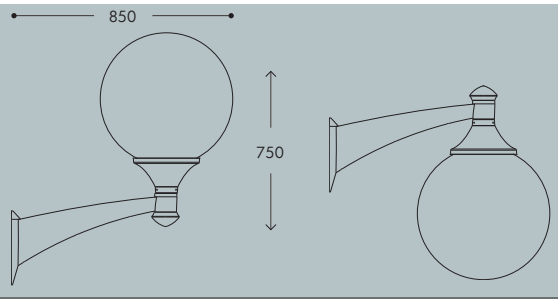

EKTOR 5000 PILAR/GLOBE500 2L	AKILLE 5000 PILAR/GLOBE500 2L
G51.377.P20	G51.427.P20

Pcs 1
Kg 57,7
mc 0,64

EKTOR 4500 PILAR/GLOBE500 2L	AKILLE 4500 PILAR/GLOBE500 2L
G51.374.P20	G51.424.P20

Pcs 1
Kg 52,2
mc 0,61

EKTOR 4000 PILAR/GLOBE500 2L	AKILLE 4000 PILAR/GLOBE500 2L
G51.371.P20	G51.421.P20

Pcs 1
Kg 46,7
mc 0,58

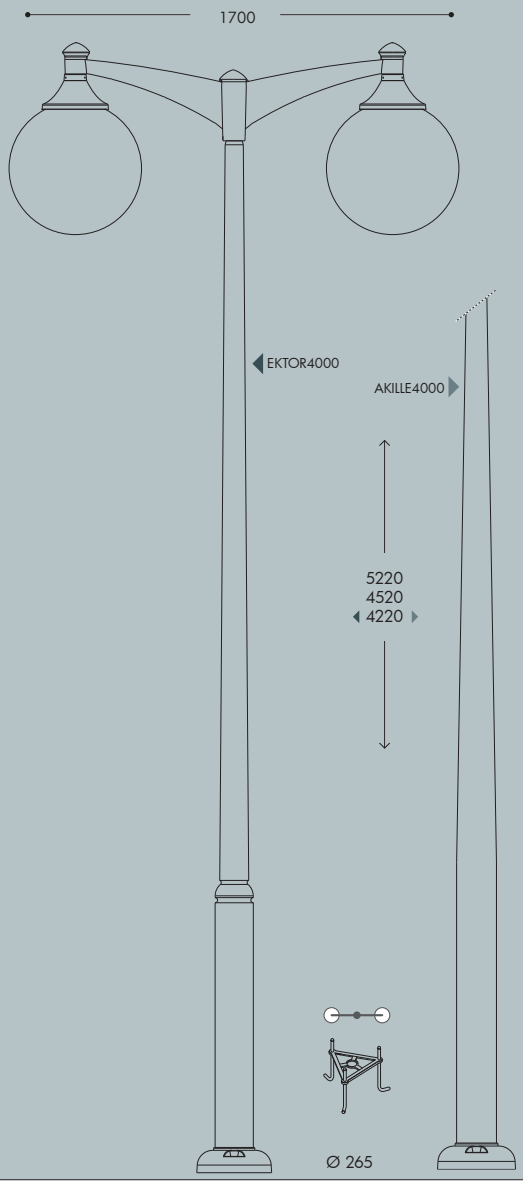

GLOBE500

G51.B50

Pcs 2
Kg 8
mc 0,29

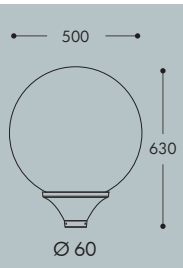

EKTOR 5000 PILAR/GLOBE500 1L	AKILLE 5000 PILAR/GLOBE500 1L
G51.377.P10	G51.427.P10

Pcs 1
Kg 52
mc 0,45

EKTOR 4500 PILAR/GLOBE500 1L	AKILLE 4500 PILAR/GLOBE500 1L
G51.374.P10	G51.424.P10

Pcs 1
Kg 46,5
mc 0,42

EKTOR 4000 PILAR/GLOBE500 1L	AKILLE 4000 PILAR/GLOBE500 1L
G51.371.P10	G51.421.P10

Pcs 1
Kg 41
mc 0,39

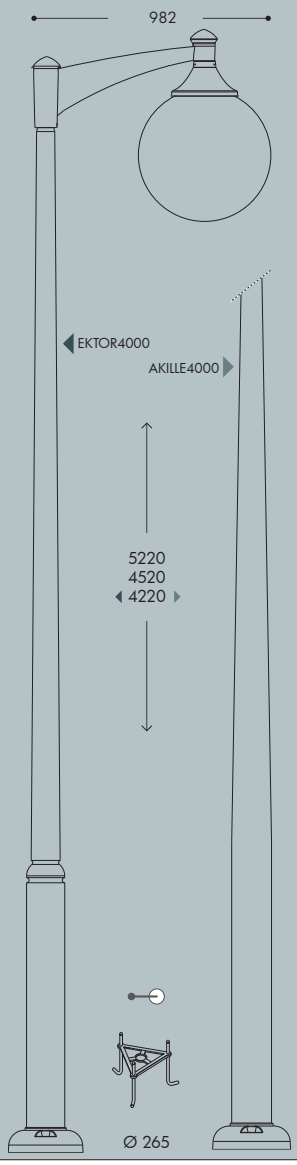





HIGH-BAY

LUIGI 400-DR HIGH POWER LED

HIGH-BAY

High-bay luminaries made in shockproof resin material, UV rays stabilized, rust and corrosion-free. Provided with reflective ceiling designed to host the lighting source and equipped with TÜV approved, long-life and efficient **E27 high power LED lamp included**. Insulation class II, Protection rating IP65.

*Riflettore indistriale moderno realizzato in resina antiurto, stabilizzato ai raggi UV, inattaccabile da ruggine e corrosione. Provvisto di soffitto riflettente progettato per accogliere la sorgente luminosa e fornito completo di lampada **a LED E27 ad ALTA POTENZA**, approvata TÜV di lunga durata ed elevata efficienza. Classe di isolamento II, grado di protezione IP65..*



L41.128.H1L

CE · UV-TREATED · CLASS II DOUBLE INSULATION · PUBLIC · RECYCLABLE · ANTI-SHOCK · +90° -60° TEMPERATURE · HANGING

MADE IN ITALY

LUIGI 400-DR HIGH POWER LED - COMPONENTS

IP65



HANGING HOOK made of shockproof resin material, UV-rays stabilized, rust and corrosion-free

GANCIO *per sospensione, realizzato in resina antiurto, stabilizzata ai raggi UV, inattaccabile da ruggine e corrosione.*

High temperature resistant reflective **CEILING** made of shockproof resin material. Provided with E27 lampholder and equipped with **HIGH POWER LED lamp**. Designed to host and protect the lighting source, granting its safe and quick installation.

SOFFITTO *riflettente realizzato in resina antiurto ad alta resistenza al calore. Fornito completo di portalampada E27 e provvisto di* ***lampada a LED ad ALTA POTENZA****. Progettato per accogliere e proteggere la sorgente luminosa e per garantirne una veloce e sicura installazione.*

DIFFUSER made of UV-rays stabilized polymethylmethacrylate (PMMA), one piece only, available in clear or opal colour.

DIFFUSORE *realizzato in polimetilmetacrilato (PMMA) stabilizzato ai raggi UV, un pezzo unico, disponibile in colore trasparente o opale.*

Decorative connection **RING** to be fixed on the luminaries diffuser.

ANELLO *decorativo di connessione da fissare sul diffusore dell'apparecchio.*

LUIGI 400-DR HIGH POWER LED

L41.128. *



Dimensions and weight
Height: 330 mm
Diameter: 480 mm
Weight: 4,7 Kg
Junction to support: diameter 60 mm
Area expose to wind pressure:
CxS = m² 0,1449

Moulded colours:
Black *White* *Grey*

Diffuser PMMA:
Clear *Opal*

HIGH POWER LED



- **COST SAVING:** long-life and efficient LED light source.
- **BUILT-IN DRIVER:** quick and easy lamp replacement
- **GREAT FLEXIBILITY:** E27 standard lamp holder.
- **FUTURE-PROOFED LUMINARIES:** performances easy to upgrade to latest technology developments.
- **SUITABLE FOR OUTDOOR USE:** built-in driver fully protected against heat and humidity by silicone paste.

Luminaries equipped with TÜV approved, long-life and efficient **E27 high power LED lamp**, granting the same luminous flux of traditional SON/HQI lighting sources. The lamp can be quickly and easily replaced, making the luminaries maintenance very simple.

			*ADD. SUFFIX
E27	30 W	3300 Lm	4000 K .Q1L
			3000 K .Q1R
E27	50 W	5000 Lm	4000 K .H1L
			3000 K .H1R

* ADD THESE SUFFIXES TO THE REFERENCES MENTIONED IN THE CATALOGUE

LED LAMPS

More technical details about TÜV approved Fumagalli LED Lamps on page 512.

PHOTOMETRIC DATA SAMPLE

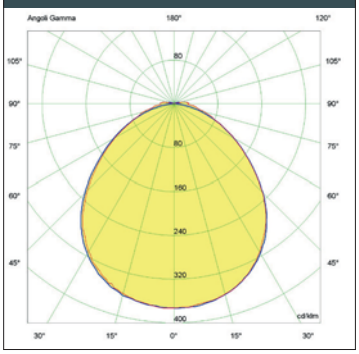

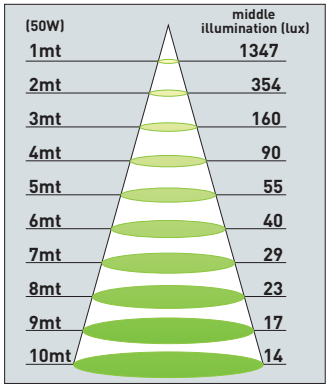

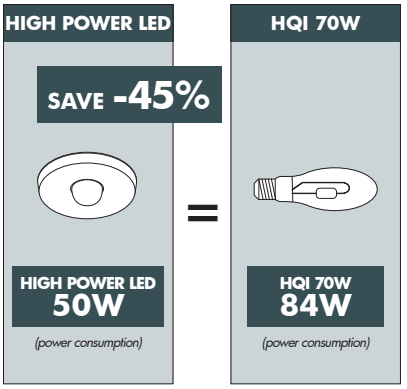

LUIGI 400 GX53 LED

HIGH-BAY

High-bay luminaries made of shockproof resin material, UV-rays stabilized, rust and corrosion-free. Supplied with flat diffuser granting no upward light emission and complete with hook for hanging. Equipped with TÜV approved, long-life and efficient **GX53 LED modular system** in different wattages. Insulation class II, Protection rating IP65.

*Riflettore industriale realizzato in resina antiurto, stabilizzato ai raggi UV, inattaccabile da ruggine e corrosione. Fornito con diffusore piatto per garantire assenza di emissioni di luce verso l'alto e completo di gancio di sospensione. Provvisto di **sistema modulare a LED GX53** approvato TÜV di lunga durata ed alta efficienza disponibile in diverse potenze. Classe di isolamento II, grado di protezione IP65.*



L4F.128.D6L

MADE IN ITALY

LUIGI 400 GX53 - COMPONENTS

IP65



HANGING HOOK made of shockproof resin material, UV-rays stabilized, rust and corrosion-free

***GANCIO** per sospensione, realizzato in resina antiurto, stabilizzata ai raggi UV, inattaccabile da ruggine e corrosione.*



ROOF made of shockproof resin material one piece only, UV-rays stabilized, rust and corrosion-free.

***TETTO** in un unico pezzo, realizzato in resina antiurto, stabilizzata ai raggi UV, inattaccabile da ruggine e corrosione.*



DIFFUSER with flat shape made of UV-rays stabilized polycarbonate (PC).

***DIFFUSORE** con configurazione piatta realizzato in policarbonato (PC) stabilizzato ai raggi UV.*



Decorative connection **RING** to be fixed on the luminaries diffuser.

***ANELLO** decorativo di connessione da fissare sul diffusore dell'apparecchio.*



LUIGI 400 GX53 LED

L4F.128 *



Dimensions and weight
Height: 330 mm
Diameter: 480 mm
Weight: 4,7 Kg
Junction to support: diameter 60 mm
Area expose to wind pressure:
CxS = m² 0,1449

Moulded colours:
Black *White* *Grey*
Diffuser PC (UV treated):
Clear

GX53 LED



- **COST SAVING:** long-life and efficient LED light sources.
- **BUILT-IN DRIVER:** quick and easy lamp replacement
- **GREAT FLEXIBILITY:** GX53 standard lamp holder.
- **FUTURE-PROOFED LUMINARIES:** performances easy to upgrade to latest technology developments.
- **SUITABLE FOR OUTDOOR USE:** built-in driver fully protected against heat and humidity by silicone paste.

High-bay supplied with white resin CEILING provided with TÜV approved, long-life and efficient **6x GX53 LED lamps included**. Each lamp can be quickly and easily replaced individually, making the luminaries maintenance very simple.



			*ADD. SUFFIX
6x 7W **42W**	**4800 Lm**	4000 K	.C6L
		3000 K	.C6R
6x 10W **60W**	**7200 Lm**	4000 K	.D6L
		3000 K	.D6R

** ADD THESE SUFFIXES TO THE REFERENCES MENTIONED IN THE CATALOGUE*

LED LAMPS

More technical details about TÜV approved Fumagalli LED Lamps on page 512.

PHOTOMETRIC DATA SAMPLE

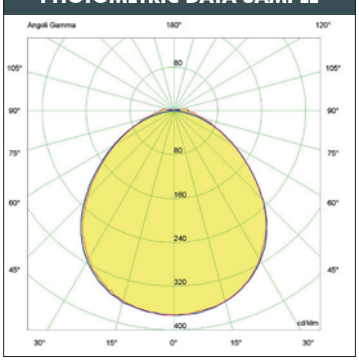

(6x10W)	middle illumination (lux)
1mt	1848
2mt	486
3mt	220
4mt	124
5mt	79
6mt	55
7mt	34
8mt	41
9mt	24
10mt	19

LUIGI 400 GX53 LED

SAVE -50%

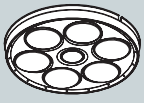

6x10W GX53 LED **60W**
(power consumption)

=

HQI 100W

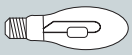

HQI 100W **115W**
(power consumption)

LUIGI 500 GX53 LED

HIGH-BAY

High-bay luminaries made of shockproof resin material, UV-rays stabilized, rust and corrosion-free. Supplied with flat diffuser granting no upward light emission and complete with hook for hanging. Equipped with TÜV approved, long-life and efficient **GX53 LED modular system** in different wattages. Insulation class II, Protection rating IP65.

*Riflettore industriale realizzato in resina antiurto, stabilizzato ai raggi UV, inattaccabile da ruggine e corrosione. Fornito con diffusore piatto per garantire assenza di emissioni di luce verso l'alto e completo di gancio di sospensione. Provvisto di **sistema modulare a LED GX53** approvato TÜV di lunga durata ed alta efficienza disponibile in diverse potenze. Classe di isolamento II, grado di protezione IP65.*



L5F.128.D9L

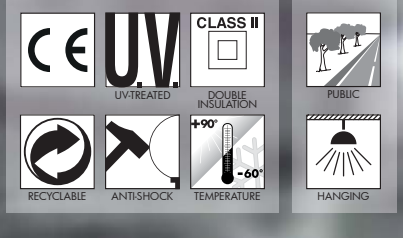

MADE IN ITALY

LUIGI 500 GX53 LED - COMPONENTS

IP65



HANGING HOOK made of shockproof resin material, UV-rays stabilized, rust and corrosion-free

***GANCIO** per sospensione, realizzato in resina antiurto, stabilizzata ai raggi UV, inattaccabile da ruggine e corrosione.*



ROOF made of shockproof resin material one piece only, UV-rays stabilized, rust and corrosion-free.

***TETTO** in un unico pezzo, realizzato in resina antiurto, stabilizzata ai raggi UV, inattaccabile da ruggine e corrosione.*



DIFFUSER with flat shape made of UV-rays stabilized polycarbonate (PC) and available in clear and opal colour.

***DIFFUSORE** con configurazione piatta realizzato in policarbonato (PC) stabilizzato ai raggi UV e disponibile in colore trasparente o opale.*



Decorative connection **RING** to be fixed on the luminaries diffuser.

***ANELLO** decorativo di connessione da fissare sul diffusore dell'apparecchio.*

LUIGI 500 GX53 LED

L5F.128 *



Dimensions and weight
Height: 380 mm
Diameter: 600 mm
Weight: 6,4 Kg
Junction to support: diameter 60 mm
Area expose to wind pressure:
CxS = m^2 0,0982

Moulded colours:
Black *White* *Grey*
Diffuser PC (UV treated):
Clear

GX53 LED



- **COST SAVING:** long-life and efficient LED light sources.
- **BUILT-IN DRIVER:** quick and easy lamp replacement
- **GREAT FLEXIBILITY:** GX53 standard lamp holder.
- **FUTURE-PROOFED LUMINARIES:** performances easy to upgrade to latest technology developments.
- **SUITABLE FOR OUTDOOR USE:** built-in driver fully protected against heat and humidity by silicone paste.

High-bay supplied with white resin CEILING provided with TÜV approved, long-life and efficient **9x GX53 LED lamps included**. Each lamp can be quickly and easily replaced individually, making the luminaries maintenance very simple.



		*ADD. SUFFIX
9x 7W **63W**	**7200 Lm**	4000 K .C9L
		3000 K .C9R
9x 10W **90W**	**10800 Lm**	4000 K .D9L
		3000 K .D9R

** ADD THESE SUFFIXES TO THE REFERENCES MENTIONED IN THE CATALOGUE*

LED LAMPS

More technical details about TÜV approved Fumagalli LED Lamps on page 512.

PHOTOMETRIC DATA SAMPLE

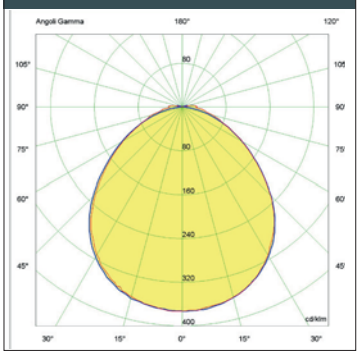

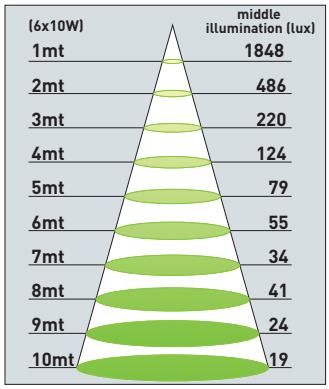

LUIGI 500 GX53 LED

SAVE -45%

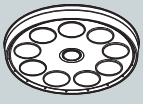

9x10W GX53 LED
90W
(power consumption)

=

HQI 150W

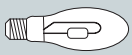

HQI 150W
165W
(power consumption)

LUIGI 400 LED

HIGH-BAY













MADE IN ITALY

LUIGI 400-DR HIGH POWER LED

L41.128.H1L	**50W**	L41.128.H1R
L41.128.Q1L	**30W**	L41.128.Q1R

4000K — E27 HIGH POWER LED LAMP INCLUDED — *3000K*

Pcs 1
Kg 4,2
mc 0,09

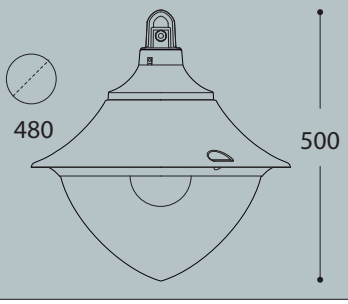

LUIGI 400 GX53

L4F.128.C6L	**42W**	L4F.128.C6R
L4F.128.D6L	**60W**	L4F.128.D6R

4000K — 6x GX53 LED LAMPS INCLUDED — *3000K*

Pcs 1
Kg 3,7
mc 0,09

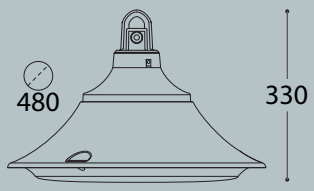

LUIGI 500 GX53

L5F.128.C9L	**63W**	L5F.128.C9R
L5F.128.D9L	**90W**	L5F.128.D9R

4000K — 9x GX53 LED LAMPS INCLUDED — *3000K*

Pcs 1
Kg 3,7
mc 0,09

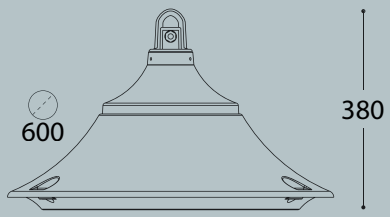

MARIO/ECOVIVI400 GX53

EV4.129.C6L	**42W**	EV4.129.C6R
EV4.129.D6L	**60W**	EV4.129.D6R

4000K — 6x GX53 LED LAMPS INCLUDED — *3000K*

Pcs 1
Kg 4,5
mc 0,07

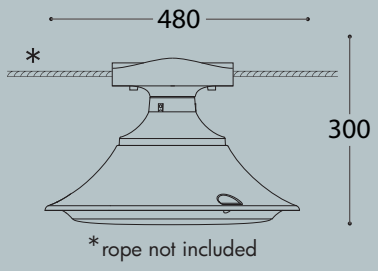

MARIO/ECOVIVI500 GX53

EV6.129.C9L	**63W**	EV6.129.C9R
EV6.129.D9L	**90W**	EV6.129.D9R

4000K — 9x GX53 LED LAMPS INCLUDED — *3000K*

Pcs 1
Kg 4,9
mc 0,09

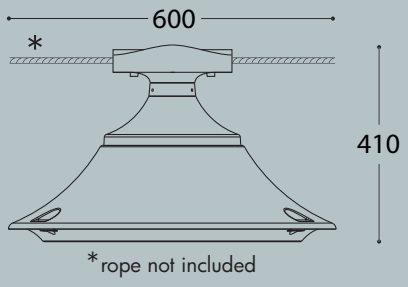

NEW LOT/ECOVIVI400 GX53

EV4.115.C6L	**42W**	EV4.115.C6R
EV4.115.D6L	**60W**	EV4.115.D6R

4000K — 6x GX53 LED LAMPS INCLUDED — *3000K*

Pcs 1
Kg 4,5
mc 0,07

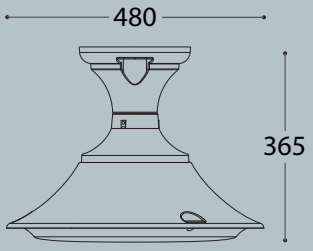

NEW LOT/ECOVIVI500 GX53

EV6.115.C9L	**63W**	EV6.115.C9R
EV6.115.D9L	**90W**	EV6.115.D9R

4000K — 9x GX53 LED LAMPS INCLUDED — *3000K*

Pcs 1
Kg 4,9
mc 0,09

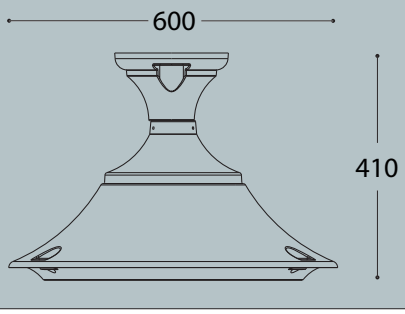



POST

FumaTech®
FUMAGALLI POLES TECHNOLOGY

CLASSIC POSTS

OUR COLLECTION

CLASSIC lighting poles of a single piece without joints, made of shockproof composite material (steel-expanse-resin), UV-rays stabilized, rust and corrosion-free. Moulded colours in paste, no maintenance or painting required. Insulation class II. Available in many design options and different sizes from 0,7mt up to 5mt high. Provided with suitable cage for ground fixation.

Pali in stile CLASSICO fabbricati in un unico pezzo senza giunzioni. Realizzati in materiale composito antiurto (ferro-resina-poliuretano), stabilizzato ai raggi UV, inattaccabile da ruggine e corrosione. Colore stampato in pasta, non necessita di verniciatura. Classe di isolamento II. Disponibili in numerose varianti decorative e in diverse altezze da mt. 0,7 a mt. 5. Provvisti di gabbia per il fissaggio a terra.

METAL POST COVERED BY RESIN

*Fumagalli **created** and developed a unique post technology, registered as **FUMATECH**. Fumatech technology grants to our lamps the same strength features of a metal post, combined with all the advantages in terms of rust and corrosion resistance that only a resin material can offer.*

*L'azienda Fumagalli ha **creato** e sviluppato un'esclusiva tecnologia per la fabbricazione dei pali, registrata come **FUMATECH**. La tecnologia FUMATECH assicura alle nostre lampade le medesime caratteristiche di solidità di un palo in metallo, con tutti i vantaggi in termini di resistenza alla ruggine e alla corrosione che solo la resina può offrire.*

FumaTech®
FUMAGALLI POLES TECHNOLOGY

more details at Pag.18



INNER METAL POLE STRUCTURE

Structural metal pole hot deep galvanized inside and outside by zinc bath immersion.

Palo strutturale in metallo galvanizzato a caldo sia all'interno che all'esterno tramite immersione in bagno di zinco.

EXPANSE

High Density rigid polyurethane provides lightweight and durable cohesion between the inner metal post and the outer resin cover.

Il poliuretano ad alta densità. Rigido ma molto leggero, garantisce una coesione duratura nel tempo tra il palo interno in metallo e la copertura esterna in resina.

OUTER RESIN COVER

Outer coating of a single piece without joints made of shockproof resin material:
- Rust and corrosion-free
- Paste molded colors, UV stabilized
- Self-extinguishing on fire

*Rivestimento esterno in **un unico pezzo** fabbricato in resina antiurto:*
- *Inattaccabile da ruggine e corrosione*
- *Colori in pasta stabilizzati ai raggi UV*
- *Autoestinguente al fuoco*

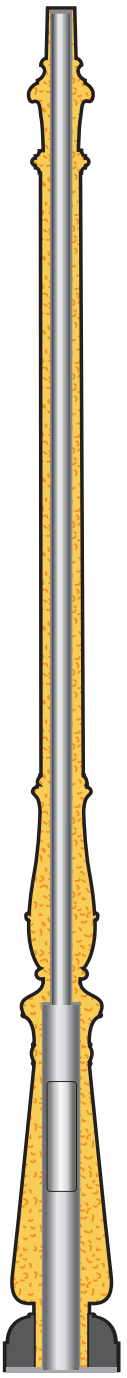











FULLY MODULAR



All the connection hubs of FUMAGALLI poles and lanterns have a diameter of 60 mm; this unique feature allows many different possible combinations of complete lamps with the same components, for a big stock flexibility.

POST COLOURS

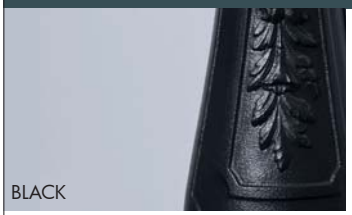







CLASSIC POSTS

INSPECTION DOORS

for KARMEL posts



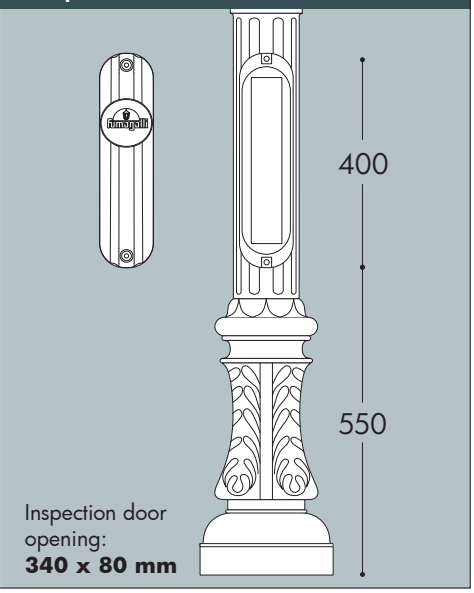

Inspection door opening:
340 x 80 mm



The inspection door can be personalized with your own logo (available only for KARMEL posts)

La porta di ispezione può essere personalizzata con il vostro LOGO (disponibile solo per i pali KARMEL)

for NEBO TABOR HOREB posts



Inspection door opening:
320 x 60 mm

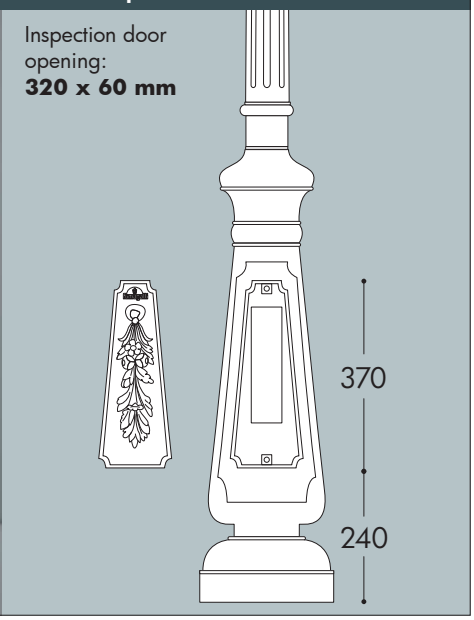

Duble Insulation
4 x 16 mm2
3 - WAY

CLASS II

IP44

Fuse holder Ifo electric cc.10

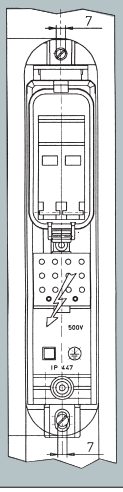

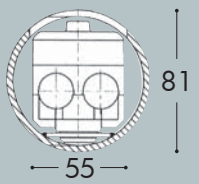

for GIONA posts



Inspection door opening:
185 x 80 mm

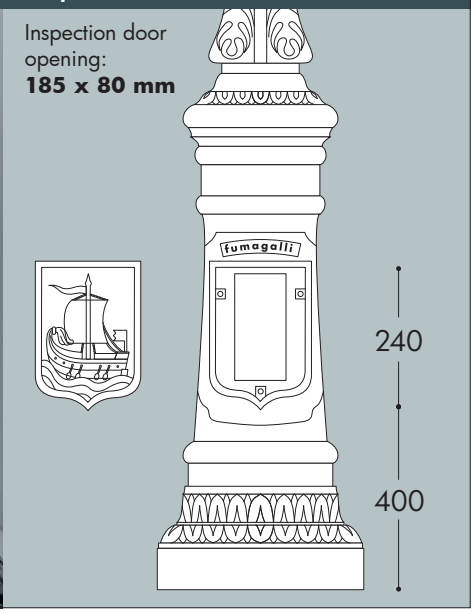

VERY EASY MAINTENANCE: IT'S ENOUGHW TO CLEAN THE POST WITH SOME OIL TO KEEP IT AS BRIGHT AS NEW.



CLASSIC POST - FOUNDATION SYSTEM



SUGGESTED SIZES FOR CONCRETE FOUNDATION

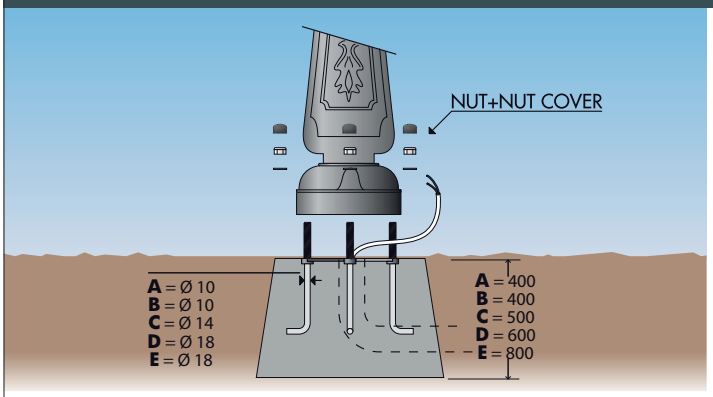

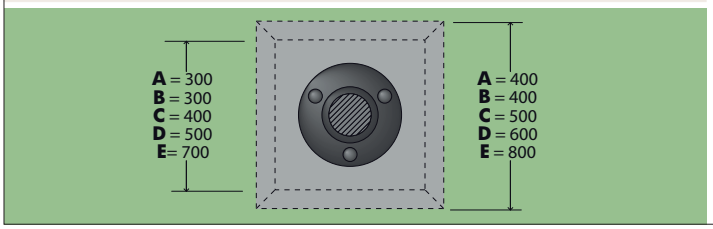

All Fumagalli poles are supplied with suitable cages for fixing into concrete foundations. The size of the cages and the size of the concrete foundation varies according to the high of the post.

Tutti i pali Fumagalli sono forniti complete di gabbie per il fissaggio a terra. Le dimensioni della gabbia e del plinto di cemento variano a secondo dell'altezza del palo.

The fixation system with two triangles allows the anchor bolts to be cemented perpendicularly to the ground. The second triangle has to be removed before installing the pole.

TIl sistema di fissaggio con due triangoli assicura che i tiranti vengano affogati nel cemento in maniera perfettamente perpendicolare rispetto al terreno. Il secondo triangolo deve essere rimosso prima di procedere al fissaggio del palo.

CAGE - A
H.GAB.10.A

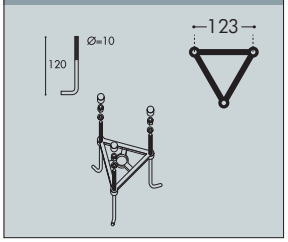

CAGE - B
H.GAB.10.B

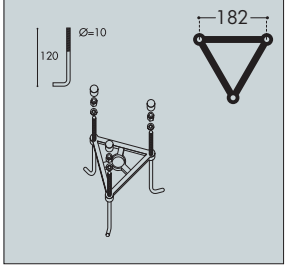

CAGE - C
H.GAB.14.C

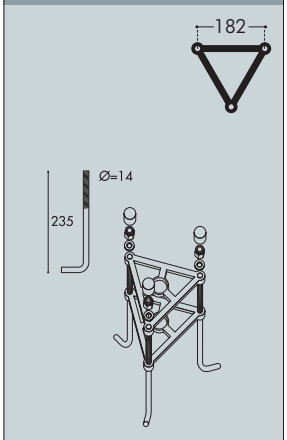

CAGE - D
H.GAB.18.D

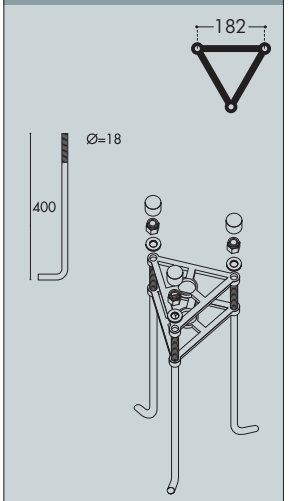

CAGE - E
H.GAB.18.E

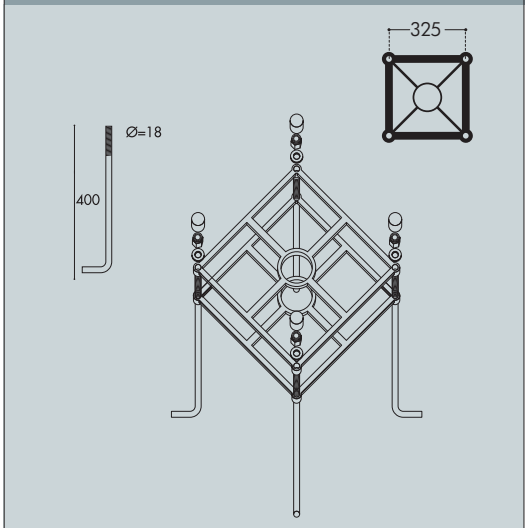

CLASSIC POSTS

CLASSIC POST COLLECTION

Each post is supplied with the suitable cage or screws for fixation.

Colours available for the CLASSIC range are the following:

Moulded colours: **Black - White**

Painted Colours: **Antique Green - Antique Bronze**

WITHOUT DOOR
WITH DOOR
WITH DOOR AND BOX

CAGE - A	CAGE - B	CAGE - C
H.GAB.10.A	H.GAB.10.B	H.GAB.14.C
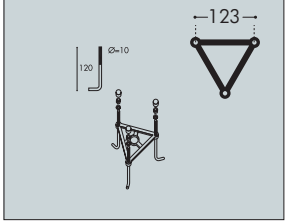	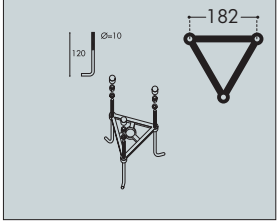	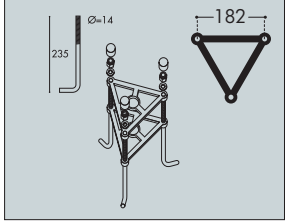

CAGE - D	CAGE - E
H.GAB.18.D	H.GAB.18.E
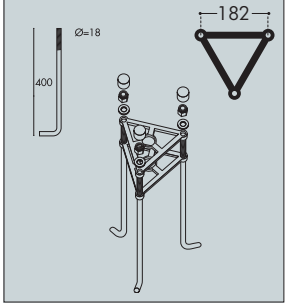	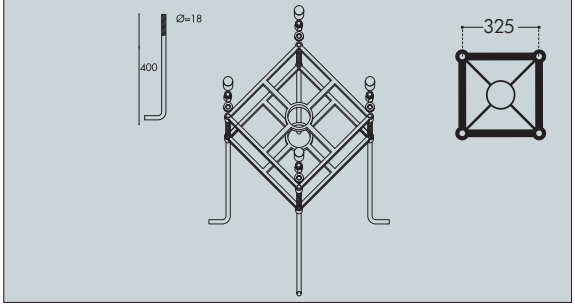

MIKROLOT	MINILOT	LOT
H.110	H.111	H.113
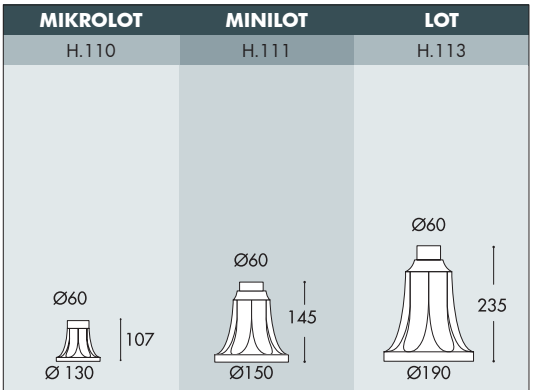		
SCREWS	SCREWS	SCREWS

IAFET.R	ERMON.R
000.162	000.195
DOOR NOT AVAILABLE	
resin Pcs 2 Kg 5,3 mc 0,057	resin Pcs 1 Kg 4,3 mc 0,075
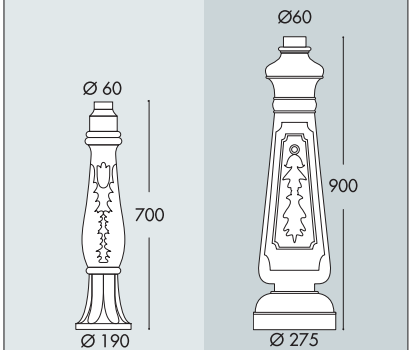	
CAGE - A	CAGE - C

MIZAR	ALOE'.R	ARTU'	GIGI	RICU
000.151	000.163	000.158	000.156	000.157
DOOR NOT AVAILABLE				
resin Pcs 5 Kg 3 mc 0,61	resin Pcs 2 Kg 6 mc 0,086	Pcs 2 Kg 15,5 mc 0,151	Pcs 2 Kg 18,5 mc 0,182	Pcs 2 Kg 20 mc 0,214
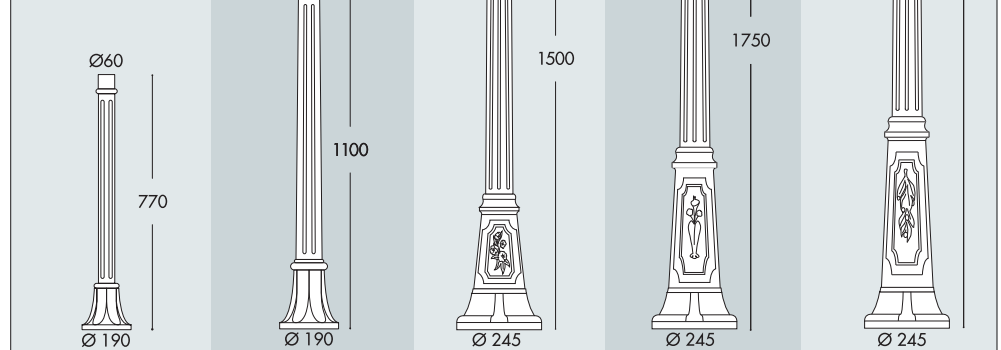				
SCREWS	CAGE - A	CAGE -B	CAGE - B	CAGE - B

NEBO	TABOR	HOREB	KARMEL 3000	KARMEL 3500	KARMEL 4000	GIONA 4000	GIONA 4500	GIONA 5000
000.201	000.204	000.207	000.231	000.234	000.237	000.221	000.224	000.227
000.202	000.205	000.208	000.232	000.235	000.238	000.222	000.225	000.228
000.203	000.206	000.209	000.233	000.236	000.239	000.223	000.226	000.229
DOOR IS OPTIONAL			DOOR IS OPTIONAL			DOOR IS OPTIONAL		
Pcs 1 Kg 21 mc 0,135	Pcs 1 Kg 25,5 mc 0,164	Pcs 1 Kg 28 mc 0,190	Pcs 1 Kg 25,5 mc 0,167	Pcs 1 Kg 28 mc 0,193	Pcs 1 Kg 30,5 mc 0,220	Pcs 1 Kg 55 mc 0,744	Pcs 1 Kg 58 mc 0,871	Pcs 1 Kg 60 mc 0,968

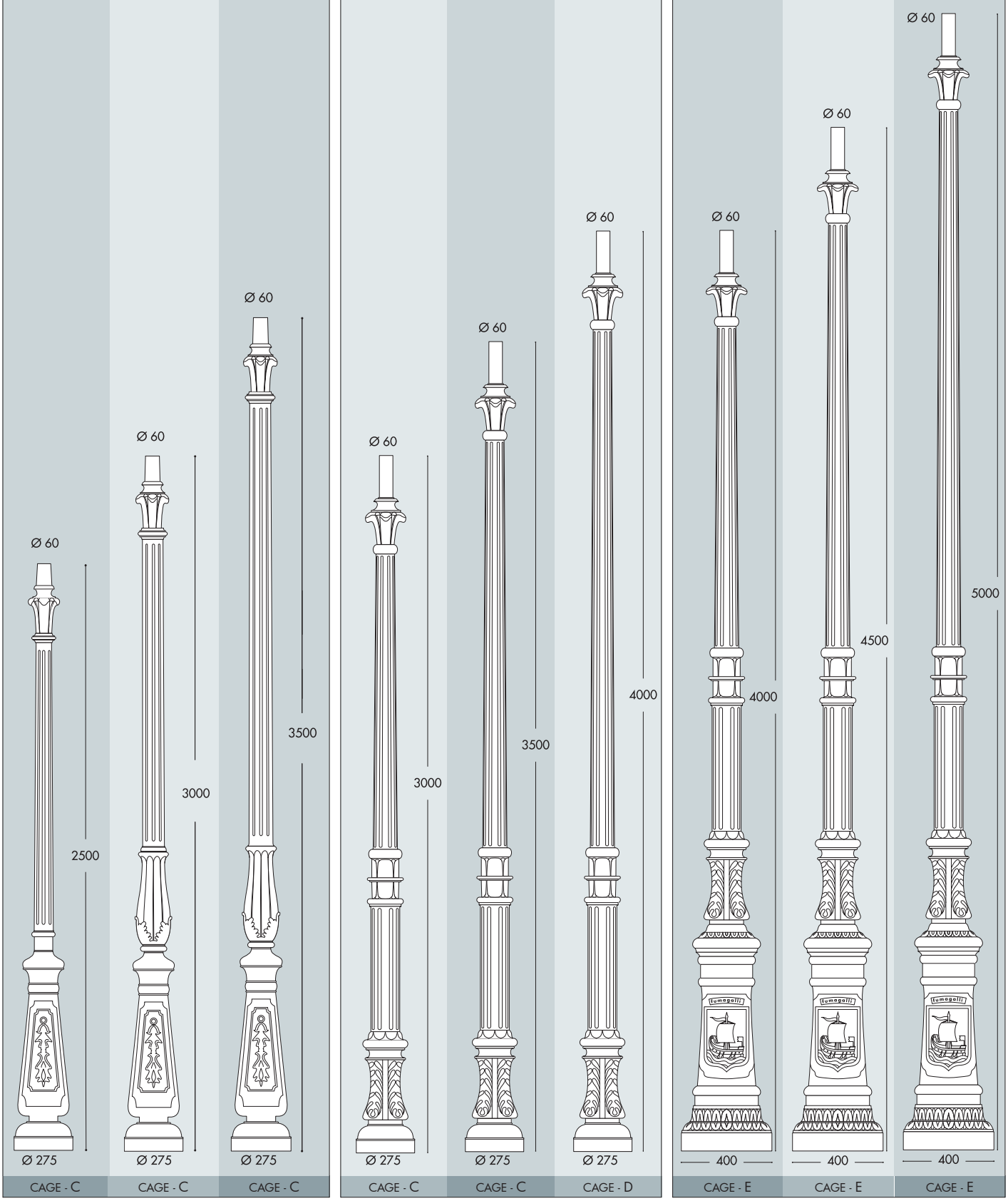

CAGE - C	CAGE - C	CAGE - C	CAGE - C	CAGE - C	CAGE - D	CAGE - E	CAGE - E	CAGE - E

CLASSIC POSTS

CLASSIC POST TOP SYSTEMS



FULLY MODULAR

All the connection hubs of FUMAGALLI poles and lanterns have a diameter of 60 mm; this unique feature allows many different possible combinations of complete lamps with the same components, for a big stock flexibility.

I terminali di connessione dei pali e delle lanterne FUMAGALLI hanno sempre un diametro di 60 mm; questa caratteristica unica permette svariate combinazioni di lampade complete con i medesimi componenti per una grande flessibilità di magazzino.

BISSO SYSTEM

BISSO SYSTEM 2L	BISSO SYSTEM 2 + 1	BISSO SYSTEM 3L	BISSO SYSTEM 3 + 1
000.000.S20	000.000.S21	000.000.S30	000.000.S31

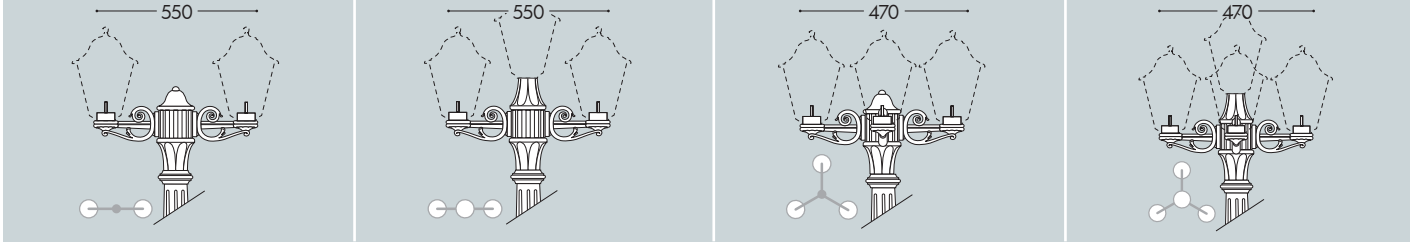

OFIR SYSTEM

OFIR SYSTEM 2L	OFIR SYSTEM 2 + 1	OFIR SYSTEM 3L	OFIR SYSTEM 3 + 1
000.000.R20	000.000.R21	000.000.R30	000.000.R31

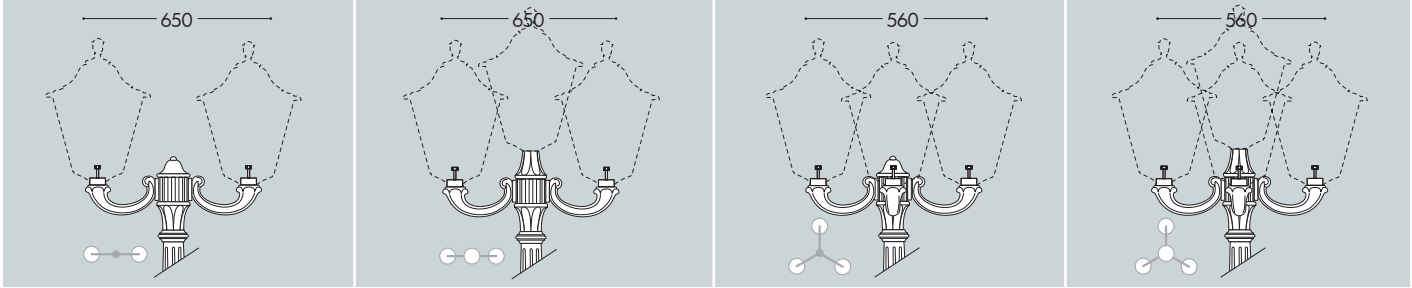

ADAM SYSTEM

ADAM SYSTEM 2L	ADAM SYSTEM 2 + 1	ADAM SYSTEM 3L	ADAM SYSTEM 3 + 1
000.000.M20	000.000.M21	000.000.M30	000.000.M31

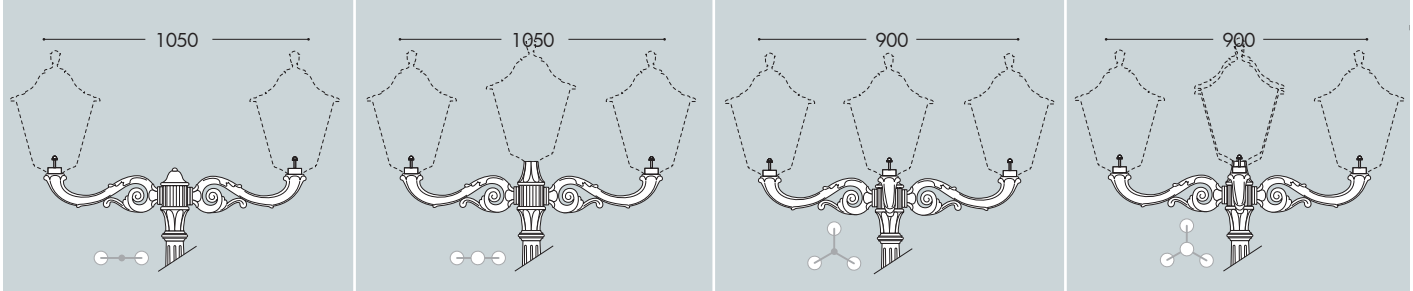

ARON SYSTEM

ARON SYSTEM 1L	ARON SYSTEM 2L	ARON SYSTEM 4L
000.000.N10	000.000.N20	000.000.N40

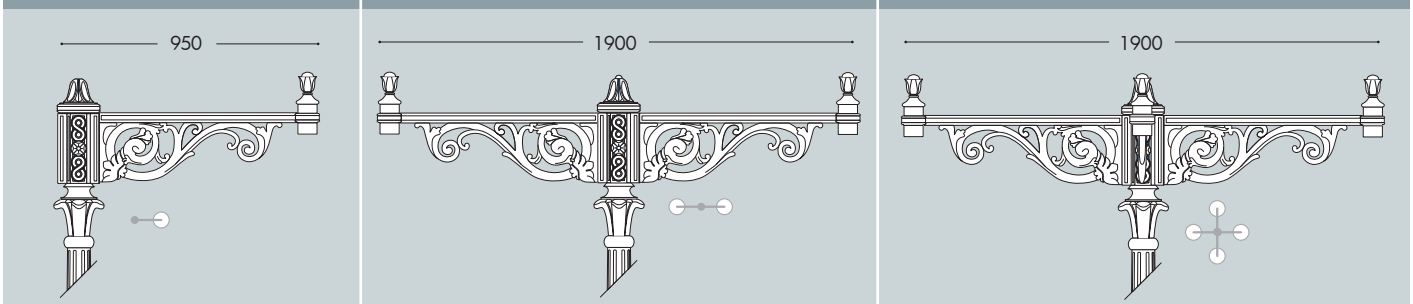

HEXAGONAL LANTERNS

SMALL SIZE

ANNA E22.000

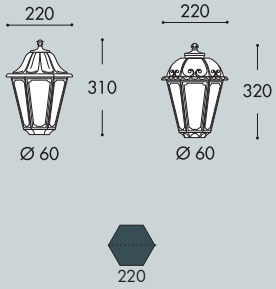

SABA K22.000

MEDIUM SIZE

RUT E26.000

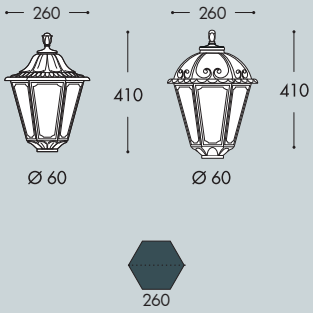

SALEM K26.000

LARGE SIZE

NOEMI E35.000

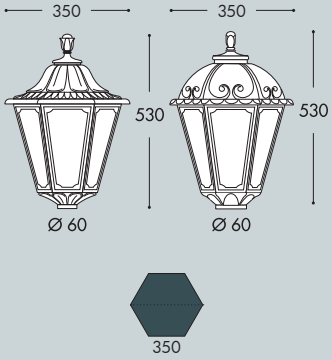

SILOE K35.000

GRAND SIZE

SQUARE LANTERNS

GOLIA Q23.000

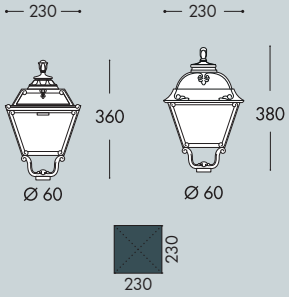

CEFA U23.000

TOBIA Q33.000 / Q35.000 *

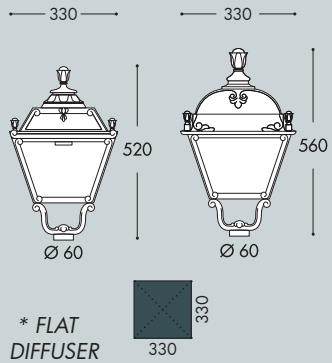

SIMON U33.000 / U35.000 *

ELIA Q43.000 / Q45.000 *

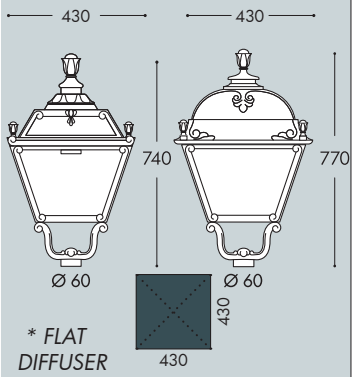

PIETRO U43.000 / U45.000 *

HALF LANTERNS

IESSE M22.000

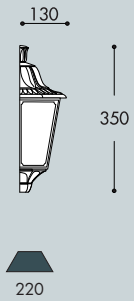

DARIA M28.000

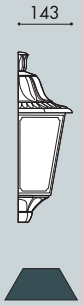

AMPHORAE

CANA 500 C50.B50

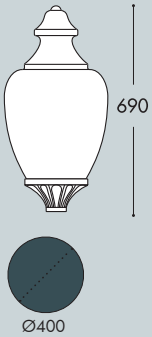

GLOBES

GLOBE 250 CLASSIC G25.B25

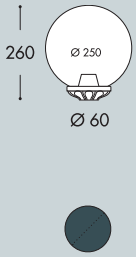

GLOBE 300 CLASSIC G30.B30

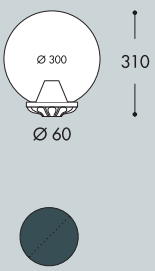

GLOBE 400 CLASSIC G40.B40

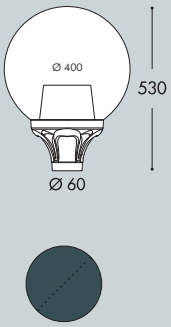

GLOBE 500 CLASSIC G50.B50

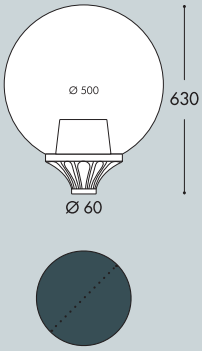

MODERN POSTS

OUR COLLECTION

MODERN lighting poles of a single piece without joints, made of shockproof composite material (steel-expanse-resin), UV-rays stabilized, rust and corrosion-free. Insulation class II. Moulded colours in paste, no maintenance or painting required. Insulation class II. Available in many design options and different sizes from 0,7mt up to 6mt high. Provided with suitable cage for ground fixation.

Pali in stile MODERNO fabbricati in un unico pezzo senza giunzioni. Realizzati in materiale composito antiurto (ferro-resina-poliuretano), stabilizzato ai raggi UV, inattaccabile da ruggine e corrosione. Colore stampato in pasta, non necessita di verniciatura. Classe di isolamento II. Disponibili in numerose varianti decorative e in diverse altezze da mt. 0,7 a mt. 6. Provvisti di gabbia per il fissaggio a terra.

METAL POST COVERED BY RESIN

*Fumagalli **created** and developed a unique post technology, registered as **FUMATECH**. Fumatech technology grants to our lamps the same strength features of a metal post, combined with all the advantages in terms of rust and corrosion resistance that only a resin material can offer.*

*L'azienda Fumagalli ha **creato** e sviluppato un'esclusiva tecnologia per la fabbricazione dei pali, registrata come **FUMATECH**. La tecnologia FUMATECH assicura alle nostre lampade le medesime caratteristiche di solidità di un palo in metallo, con tutti i vantaggi in termini di resistenza alla ruggine e alla corrosione che solo la resina può offrire.*

more details at Pag.18

FUMAGALLI POLES TECHNOLOGY



INNER METAL POLE STRUCTURE

Structural metal pole hot deep galvanized inside and outside by zinc bath immersion.

Palo strutturale in metallo galvanizzato a caldo sia all'interno che all'esterno tramite immersione in bagno di zinco.

EXPANSE

High Density rigid polyurethane provides lightweight and durable cohesion between the inner metal post and the outer resin cover.

Il poliuretano ad alta densità. Rigido ma molto leggero, garantisce una coesione duratura nel tempo tra il palo interno in metallo e la copertura esterna in resina.

OUTER RESIN COVER

Outer coating of a single piece without joints made of shockproof resin material:
- Rust and corrosion-free
- Paste molded colors, UV stabilized
- Self-extinguishing on fire

*Rivestimento esterno in **un unico pezzo** fabbricato in resina antiurto:*
- *Inattaccabile da ruggine e corrosione*
- *Colori in pasta stabilizzati ai raggi UV*
- *Autoestinguente al fuoco*

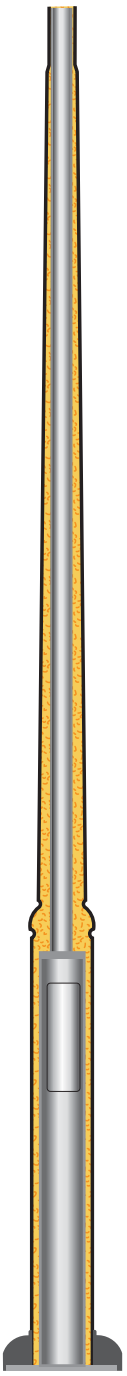





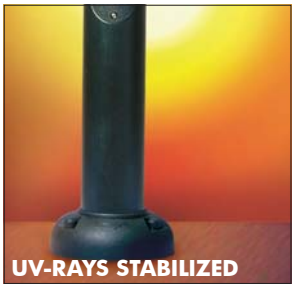





MODULAR SYSTEM



All the connection hubs of FUMAGALLI poles and lanterns have a diameter of 60 mm; this unique feature allows many different possible combinations of complete lamps with the same components, for a big stock flexibility.

POST COLOURS



MODERN POSTS

INSPECTION DOORS

for EKTOR and AKILLE posts



Inspection door opening:
340 x 80 mm

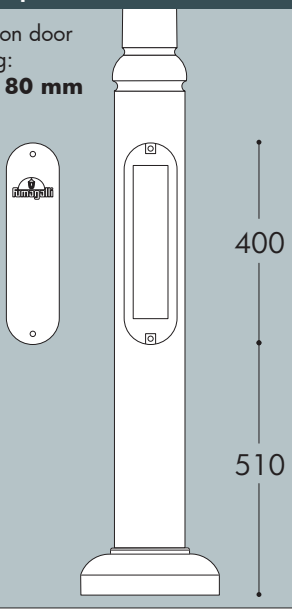



The inspection door can be personalized with your own logo (available for EKTOR and AKILLE posts)

La porta di ispezione può essere personalizzata con il vostro LOGO (disponibile per i pali EKTOR e AKILLE)

for EKTOR2500 post



Inspection door opening:
340 x 80 mm

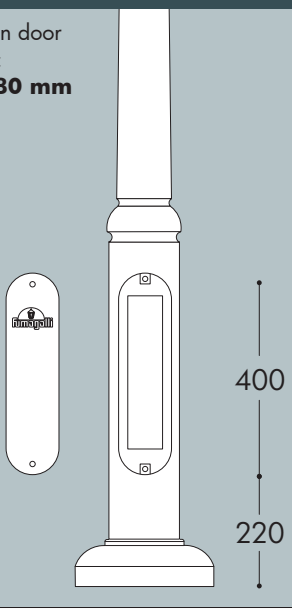

Duble Insulation
4 x 16 mm2
3 - WAY

CLASS II IP44

Fuse holder Ifo electric cc.10

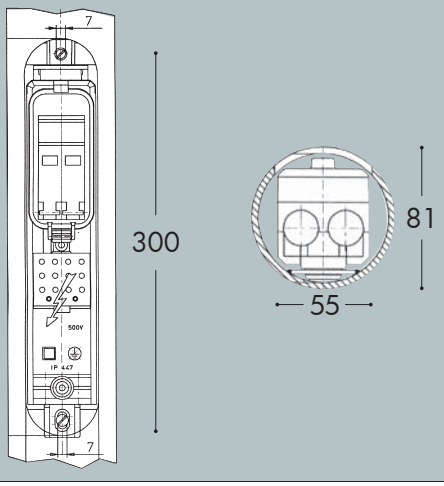



MODERN POST - FOUNDATION SYSTEM







SUGGESTED SIZES FOR CONCRETE FOUNDATIONS

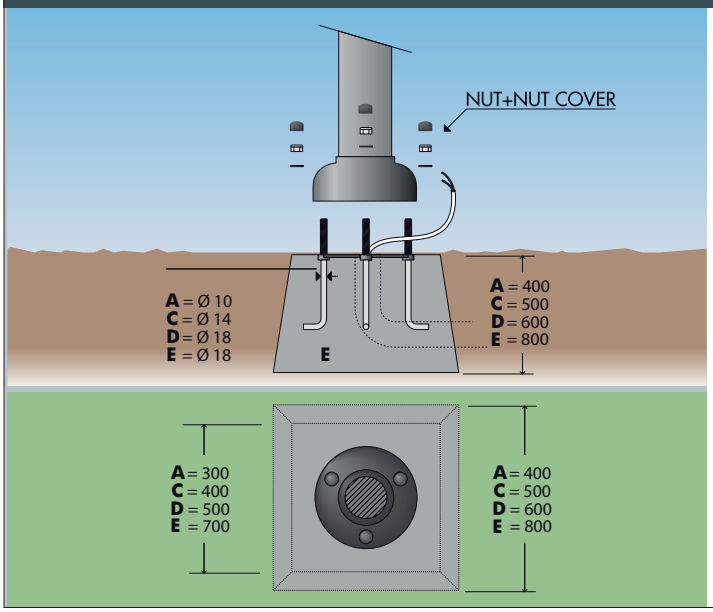

All Fumagalli poles are supplied with suitable cages for fixing into concrete foundations. The size of the cages and the size of the concrete foundation varies according to the high of the post.

Tutti i pali Fumagalli sono forniti complete di gabbie per il fissaggio a terra. Le dimensioni della gabbia e del plinto di cemento variano a secondo dell'altezza del palo.

The fixation system with two triangles allows the anchor bolts to be cemented perpendicularly to the ground. The second triangle has to be removed before installing the pole.

TIl sistema di fissaggio con due triangoli assicura che i tiranti vengano affogati nel cemento in maniera perfettamente perpendicolare rispetto al terreno. Il secondo triangolo deve essere rimosso prima di procedere al fissaggio del palo.

CAGE - A

H.GAB.10.A

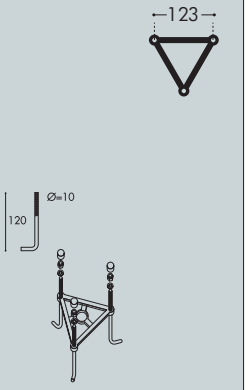

CAGE - C

H.GAB.14.C

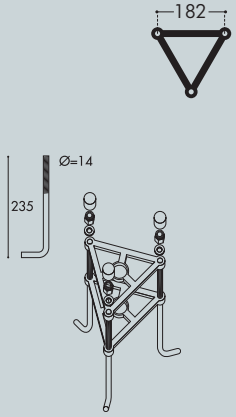

CAGE - D

H.GAB.18.D

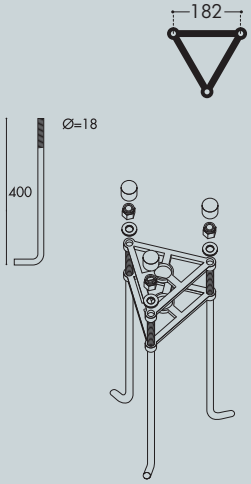

CAGE - E

H.GAB.18.E

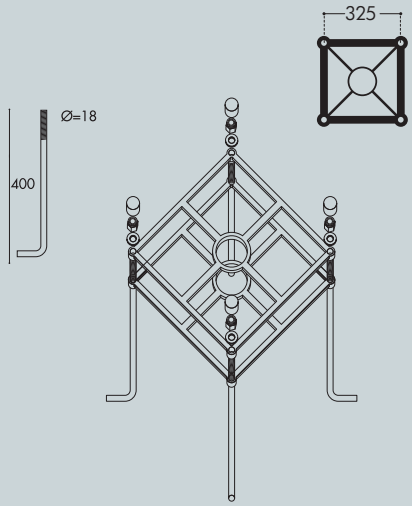

MODERN POSTS

MODERN POST COLLECTION

Each post is supplied with the suitable cage or screws for fixation.

Moulded Colours available for the MODERN range are the following:

For ARGO, FEBO and ENEA posts: **Black - White**

For EKTOR, AKILLE posts: **Black - White - Grey**

	AKILLE 3000	AKILLE 3500	AKILLE 4000
WITHOUT DOOR	000.414	000.417	000.421
WITH DOOR	000.415	000.418	000.422
WITH DOOR AND BOX	000.416	000.419	000.423
	DOOR IS OPTIONAL		
	Pcs 1 Kg 27,7 mc 0,159	Pcs 1 Kg 31,1 mc 0,185	Pcs 1 Kg 34,5 mc 0,212
	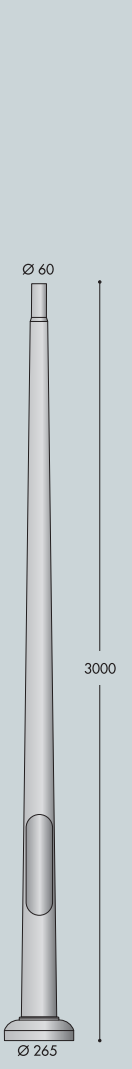	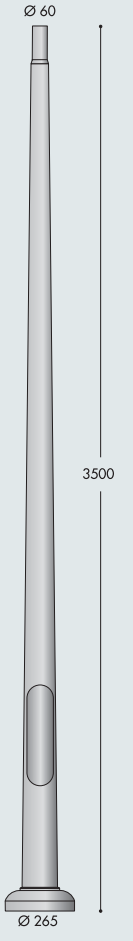	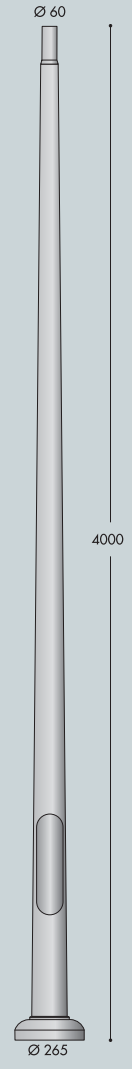
	CAGE - C	CAGE - C	CAGE - D

CAGE - A

H.GAB.10.A

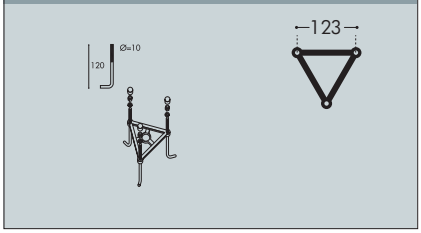

CAGE - C

H.GAB.14.C

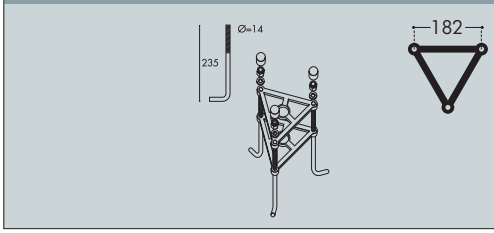

CAGE - D

H.GAB.18.D

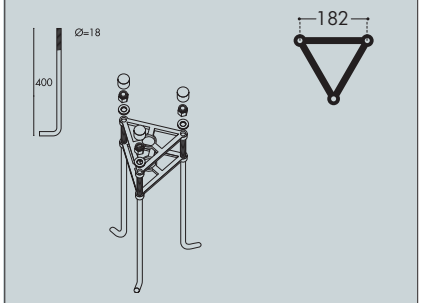

CAGE - E

H.GAB.18.E

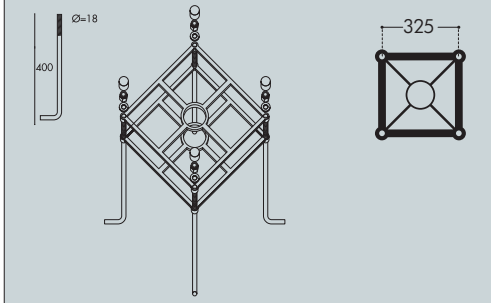

ARGO	FEBO 500	FEBO 1000	FEBO 1500
000.241	000.261	000.262	000.263
DOOR NOT AVAILABLE			
resin Pcs 10 Kg 4,4 mc 0,060	resin Pcs 4 Kg 6,7 mc 0,057	resin Pcs 4 Kg 9,3 mc 0,086	Pcs 4 Kg 19,6 mc 0,118
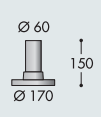	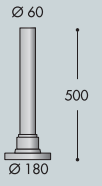	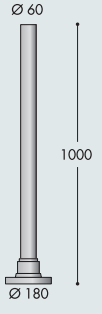	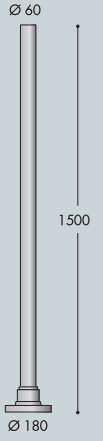
SCREWS	CAGE - A	CAGE - A	CAGE - A

ENEA 2000	ENEA 2400	ENEA 2800
000.264	000.265	000.266
DOOR NOT AVAILABLE		
Pcs 1 Kg 8 mc 0,111	Pcs 1 Kg 10 mc 0,132	Pcs 1 Kg 12,5 mc 0,151
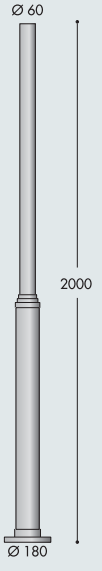		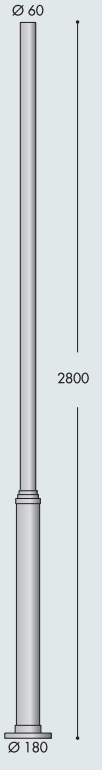
CAGE - A	CAGE - A	CAGE - A

AKILLE 4500	AKILLE 5000
000.424	000.427
000.425	000.428
000.426	000.429
DOOR IS OPTIONAL	
Pcs 1 Kg 40 mc 0,238	Pcs 1 Kg 45,5 mc 0,265
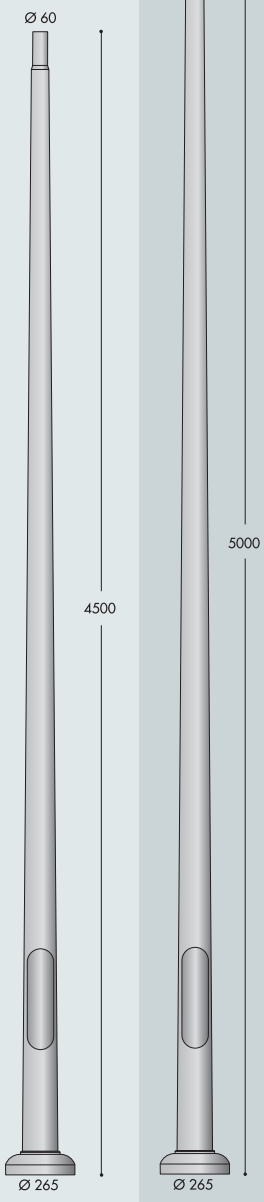	
CAGE - D	CAGE - D

EKTOR 2500	EKTOR 3000	EKTOR 3500	EKTOR 4000	EKTOR 4500	EKTOR 5000	EKTOR 6000
000.361	000.364	000.367	000.371	000.374	000.377	000.384
000.362	000.365	000.368	000.372	000.375	000.378	000.385
000.363	000.366	000.369	000.373	000.376	000.379	000.386
DOOR IS OPTIONAL						
Pcs 1 Kg 24,3 mc 0,159	Pcs 1 Kg 27,7 mc 0,159	Pcs 1 Kg 31,1 mc 0,185	Pcs 1 Kg 34,5 mc 0,212	Pcs 1 Kg 40 mc 0,238	Pcs 1 Kg 45,5 mc 0,265	Pcs 1 Kg 75 mc 1,21
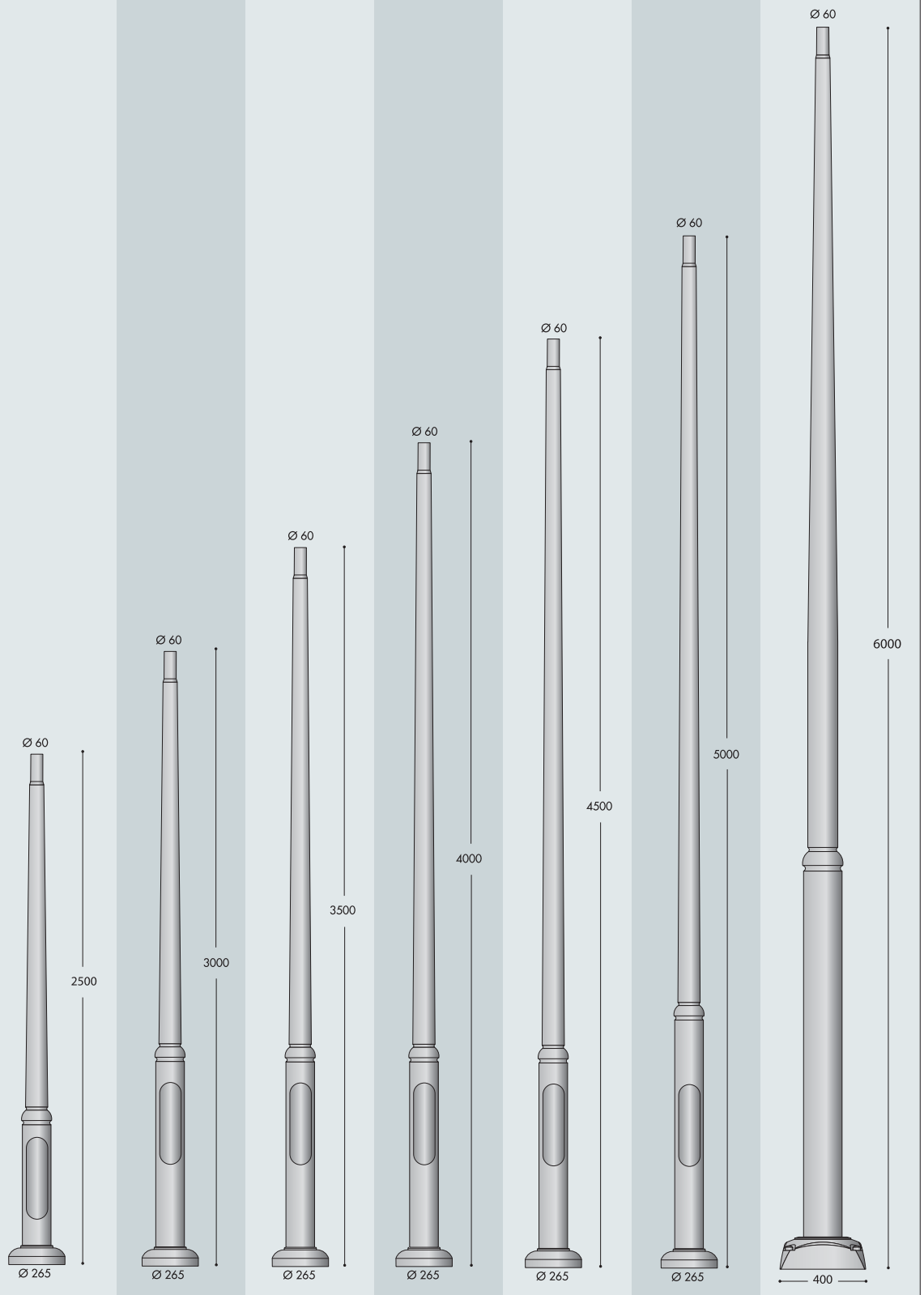						
CAGE - C	CAGE - C	CAGE - C	CAGE - D	CAGE - D	CAGE - D	CAGE - E

MODERN POSTS

MODERN POST TOP SYSTEMS



FULLY MODULAR

All the connection hubs of FUMAGALLI poles and lanterns have a diameter of 60 mm; this unique feature allows many different possible combinations of complete lamps with the same components, for a big stock flexibility.

I terminali di connessione dei pali e delle lanterne FUMAGALLI hanno sempre un diametro di 60 mm; questa caratteristica unica permette svariate combinazioni di lampade complete con i medesimi componenti per una grande flessibilità di magazzino.

GIORGIO	ROSA
4P2.000.G10 4P1.000.G10	4P2.000.G20 4P1.000.G20
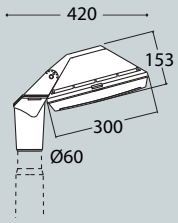	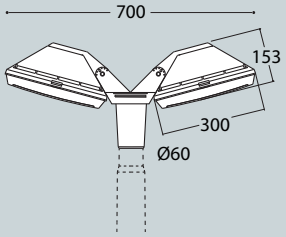

MIDIPILAR SYSTEM

MIDIPILAR SYSTEM 1L	MIDIPILAR SYSTEM 2L	MIDIPILAR SYSTEM 3L
000.000.A10	000.000.A20	000.000.A30
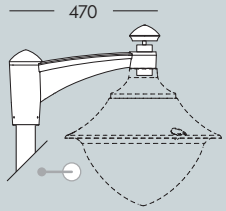	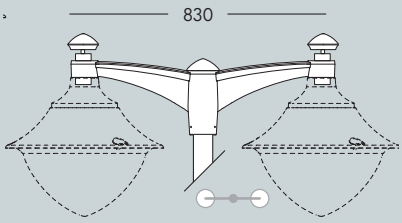	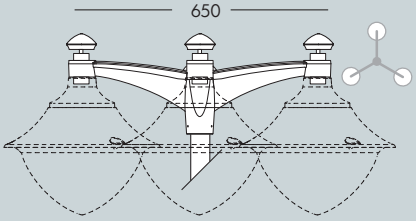

PILAR SYSTEM

PILAR SYSTEM 1L	PILAR SYSTEM 2L
000.000.P10	000.000.P20
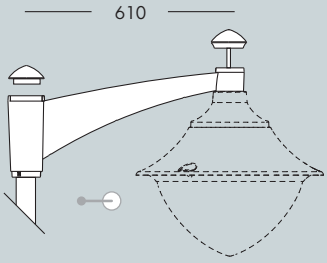	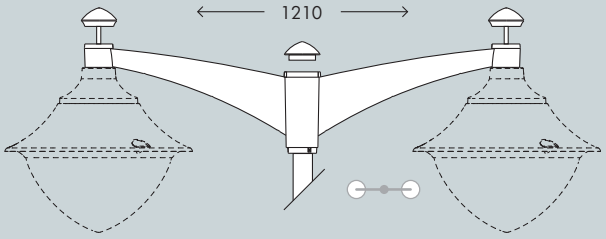

ELI SYSTEM

ELI SYSTEM 2L	ELI SYSTEM 2 + 1	ELI SYSTEM 3L	ELI SYSTEM 3 + 1
000.000.L20	000.000.L21	000.000.L30	000.000.L31
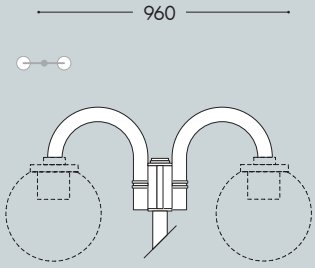	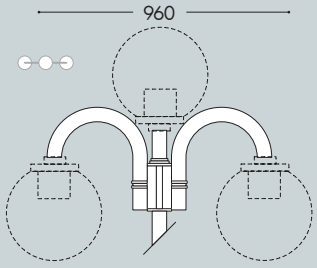	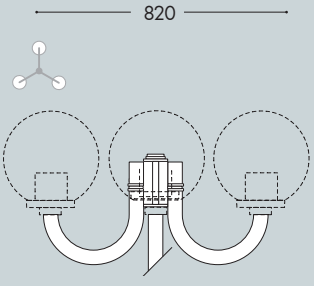	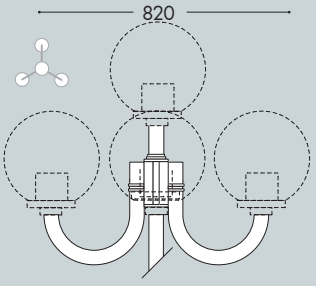

LARGE SIZE

REMO 400
R50.000

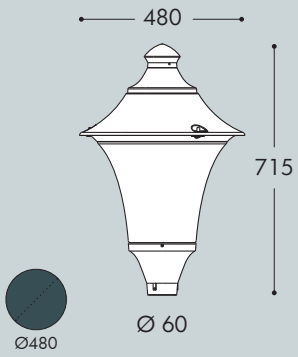

GINO 400
F50.000

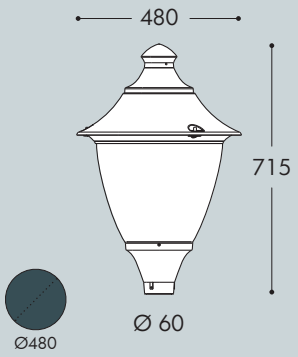

GRAND SIZE

REMO 500
R60.000

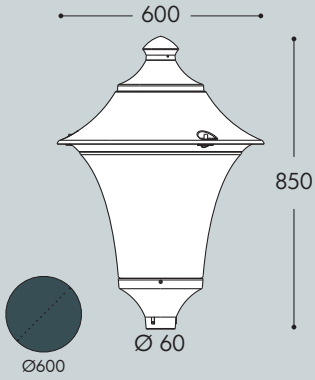

GINO 500
F60.000

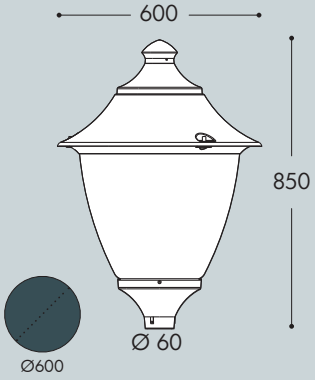

BEPPE 400
P50.000

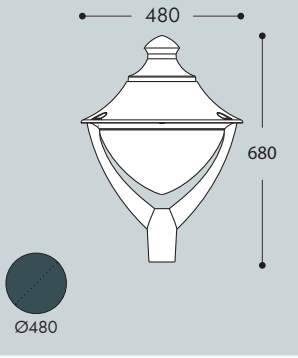

ECOBEPPE 400
EP5.000

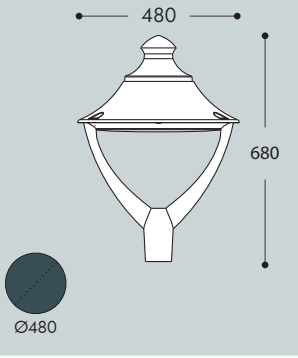

BEPPE 500
P60.000

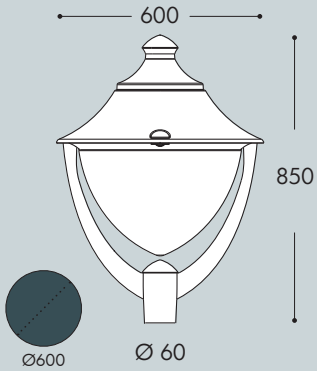

ECOBEPPE 500
EP6.000

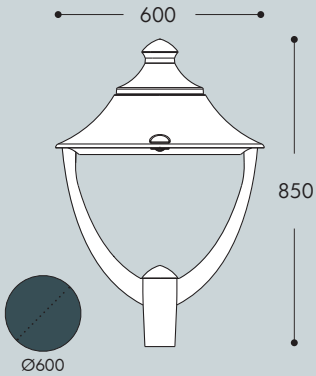

VIVI 400
V50.000

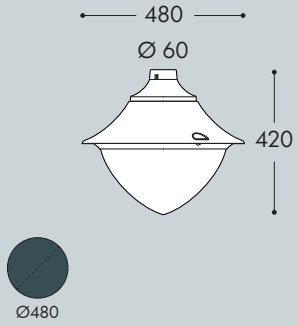

ECOVIVI 400
EV4.000

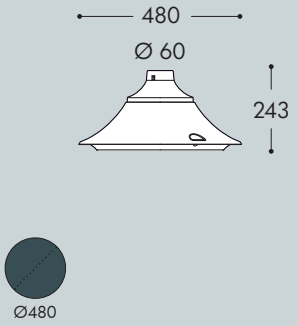

VIVI 500
V60.000

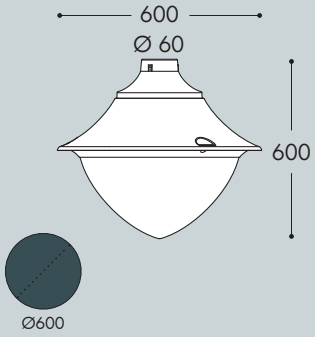

ECOVIVI 500
EV6.000

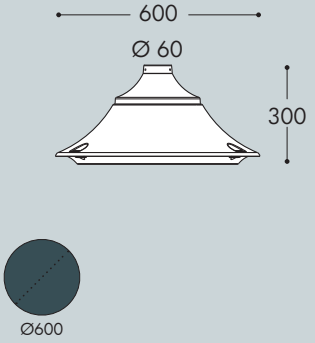

GLOBE 400 MODERN
G41.B40

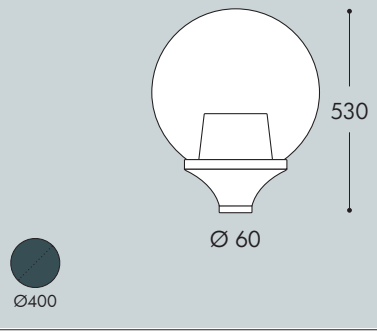

GLOBE 500 MODERN
G51.B50

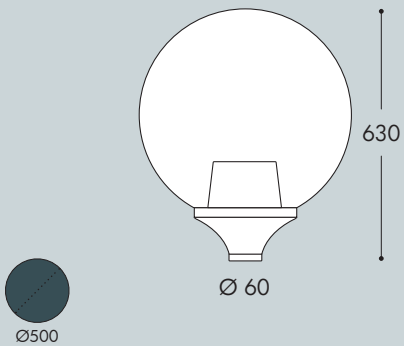


www.fumagalli.it
4000 K
11 W
1300 lm
fumagalli
since 1973
100-240 V
150 mA
50/60 Hz
LED GX53
PF 0,9
CRI >80
OUTDOOR &
INDOOR USE
-30° +80°C
90% Humidity
surge
resistant
beam angle
11 kWh/1000h
18 W
2000 lm
200 mA
50/60 Hz
Warm up time
25.000 h
>25.000
LED 2700 K
12 W
1500 lm
E27-A70
FILAMENT
12W 1500lm
100-240V
100 mA
PF >0,7
CRI >80
2700 K
LED 2700 K
8 W
1000 lm
E27-A60
FILAMENT
8W 1000lm
LED 2700 K
6 W
800 lm
E27-A60
FILAMENT
6W 800lm
100-240V
60 mA
PF >0,7
CRI >80
2700 K
50W
5000lm
210 mA
50/60 Hz
CRI >80
200°
30.000
Switching cycles
LED 4000 K
3,5 W
400 lm
3,5 W
400 lm
OUTDOOR &
INDOOR USE
100-240V
70 mA
50/60Hz
25.000 h
CRI >80
4000 K
3 W 350 lm
100-240 V
30 mA
CRI >80
50/60 Hz
0 sec
Warm up time
beam angle
25.000 h
30.000
3000 K


fumagalli
since 1973
GX53
LAMP CODE:
H5.LED.053.4K
ENERG
енергия · ενέργεια
A++
A+
A
B
A+
4000 K
E27
HIGH POWER
LAMP
30%
energy cost
savings
LED 4000 K
50 W
5000 lm
30W
3300lm
LED 4000 K
10 W
1200 lm
10 W 1200 lm
LED 4000 K
7 W
800 lm
7 W 800 lm
100-240 V
34 mA
50/60 Hz
CRI >80
120°
beam angle
30.000
4000 K
50%
LAMP CODE:
H2.LED.053[V3]

LAMPS

FUMAGALLI LED LAMPS

MODULAR SYSTEM

Innovative **TÜV certified LED lamps** with standard E27, GX53 or GU10 lamp holder to get a very efficient LED lighting system. Heatsink and driver are built-in the lamps. LED modules can be easily replaced without the help a qualified technician. Available in different wattage versions and color temperature. Moreover combing in series Fumagalli GX53 lamps you get a powerful and efficient public lighting system both on classic and modern luminaries.

LVD tested
EMC tested
ERP 6000h



BENEFITS:

- **COST SAVING:** long-life and efficient LED light sources.
- **BUILT-IN DRIVER:** quick and easy lamp replacement.
- **GREAT FLEXIBILITY:** standard lamp holder.
- **FUTURE-PROOFED LUMINARIES:** performances easy to upgrade to latest technology developments.
- **SUITABLE FOR OUTDOOR USE:** driver fully protected against heat and humidity by silicone paste.
- **TÜV CERTIFIED QUALITY:** Production monitored, CE marked, LVD and EMC tested, in compliance with the European Ecodesign Directive (ERP).





Power surges resistant

- **Wide voltage range (100-240V)** to protect the driver both from voltage droop and voltage overshoot, which are quite frequent in case of outdoor installations.
- **Double 400V capacitors** and multiple resistances to withstand power surges.
- **Silicone paste** to avoid – in case of voltage swings- the vibration of the electronic components of the driver and the consequent risk of components unsoldering.

Heat resistant - Working temperature -30°+80°C

- **Gold wire bonding:** Chips connected by pure gold wires, which are able to withstand at the highest and lowest temperatures and at temperature fluctuations between day and night. The gold wire bonding can grant a lumens maintenance factor > 80%.
- **Silicone paste:** Thermoconductive silicone paste with metal powder inside for helping heat dissipation and avoid overheating problems and for protecting the electronic components in case of high and low temperatures.

Humidity resistant - Weatherproof driver for a longer lifetime

- **Silicone paste:** The driver is fully enclosed in a special silicone paste, which ensures the highest driver protection against moisture and humidity up to 90%, both unavoidable in outdoor installations.



Tested according to :
EN 62560:2012/A1: 2015
IEC/TR 62778:2014
EN 62493:2015

CE

LVD TESTED

LVD Certificate: *Fumagalli lamps fulfil the Low Voltage Directive 2014/35/EU, therefore are CE marked and comply with safety requirements like protection against electrical shock, moisture and heat resistance, resistance to flame and ignition.*

EMC TESTED

EMC Certificate: *Fumagalli lamps meet the Electromagnetic Compatibility Directive 2014/30/EU*

ERP 6000 h

ERP Attestation of conformity: *Fumagalli lamps fulfil the European Ecodesign Directive 2009/125/EC about the energy performance requirements of energy related products.*

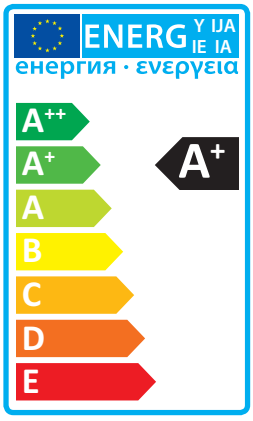





E27 HIGH POWER LED

TÜV CERTIFIED LED MODULES

SILICONE PROTECTION



INDOOR & OUTDOOR USE

-30 +80 °C	90% HUMIDITY

VOLTAGE SURGE RESISTANT

GOLD WIRE BONDING

- 120 LED chips connected by pure **gold wires** able to withstand at the highest and lowest temperatures and granting a **lumens maintenance factor > 80%**.
- SMD 3528.



LENS

- Opal color lens reducing dazzle.
- Made of UV stabilized resin material to avoid yellowing process.
- Special lens design for a better light distribution.





HEATSINK

- Made by white painted aluminum.
- Special design to grant a correct heat dissipation.



DRIVER 100-240V

- IC isolated driver technology.
- Wide voltage range: **100-240V** +/- 10% tolerance to protect the driver both from voltage droop and voltage overshoot.
- **Double 400V capacitors** and multiple resistances to withstand power surges.



THERMOCONDUCTIVE SILICONE PASTE

- To protect the driver against moisture and humidity up to **90%**, granting a longer product lifetime
- To help heat dissipation thanks to the metal powder inside the paste, granting **-30°+80°C** working temperature.
- To avoid the vibration and the unsoldering of the electronic components of the driver.



E27 HIGH POWER LED



POWER	**30 W**	
LUMINOUS FLUX	**3300 lm**	
EFFICIENCY	110 Lm/W	
VOLTAGE	100-240 V	
FREQUENCY	50/60 Hz	
CURRENT	135 mA	
POWER FACTOR	> 0,9	
COLOR RENDERING INDEX RA	> 80	
BEAM ANGLE	200°	
WARM UP TIME	< 1”	
SWITCHING CYCLE	30.000	
LIFETIME	25.000 h	
KELVIN	4000 K	3000 K
REF. CODE	H2.LED.HIP.4K	H2.LED.HIP.3K

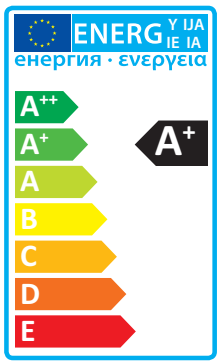

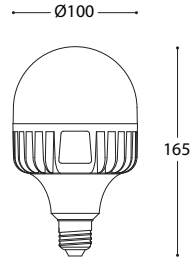

COMPARISON

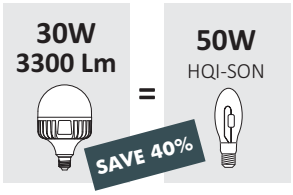

E27 HIGH POWER LED



POWER	**50 W**	
LUMINOUS FLUX	**5000 lm**	
EFFICIENCY	100 Lm/W	
VOLTAGE	100-240 V	
FREQUENCY	50/60 Hz	
CURRENT	210 mA	
POWER FACTOR	> 0,9	
COLOR RENDERING INDEX RA	> 80	
BEAM ANGLE	200°	
WARM UP TIME	< 1”	
SWITCHING CYCLE	30.000	
LIFETIME	25.000 h	
KELVIN	4000 K	3000 K
REF. CODE	H.LED.HIP.4K	H.LED.HIP.3K

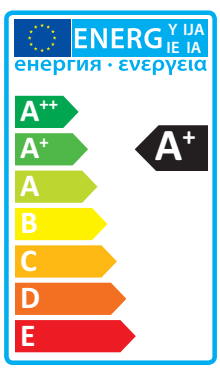

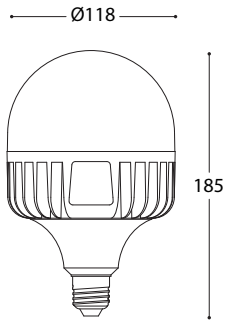

COMPARISON

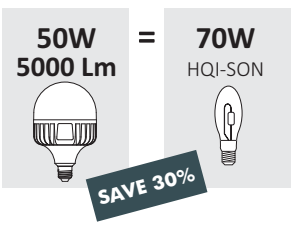

E27 FILAMENT LED

TÜV CERTIFIED LED MODULES

SILICONE PROTECTION

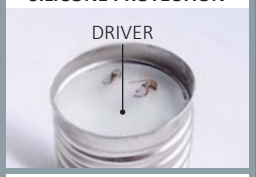

INDOOR & OUTDOOR USE

-30 +80 °C | 90% HUMIDITY

VOLTAGE SURGE RESISTANT

GOLD WIRE BONDING

- LED chips connected by **gold wires** able to withstand at the highest and lowest temperatures and granting a **lumens maintenance factor > 80%**.



PHOSPHOR DISPENSING

- Filaments covered by Intermatix phosphor.
- Phosphor dispensed on both side of the filament allowing a better light reflection.

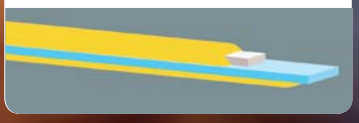

BULB GLASS

- Bulb glass with **90% hydrogen gas** inside to help heat dissipation.
- Filament welded and inserted into the glass by an automatic process- instead of by hand- to get a much more precise result.



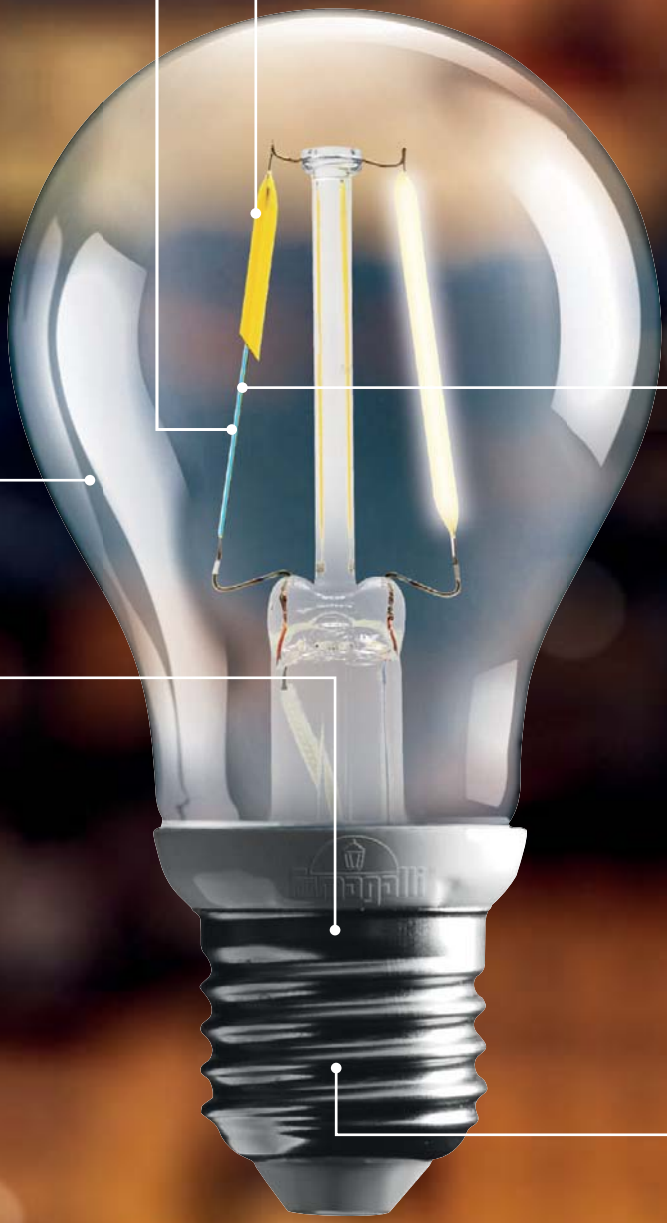

SAPPHIRE CHIP SUPPORT



CHIP ON CORD TECHNOLOGY

- Epistar led chips bounded on pure synthetic **sapphire** substrate.
- Improved shock resistance.
- Higher transparency, increased lumen output and better heat dissipation in comparison with glass or ceramic substrate.

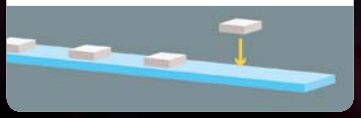

DRIVER 100-240V

- IC isolated driver technology.
- Wide voltage range: **100-240V** +/- 10% tolerance to protect the driver both from voltage droop and voltage overshoot.
- **Double 400V capacitors** and multiple resistances to withstand power surges.



THERMOCONDUCTIVE SILICONE PASTE

- To protect the driver against moisture and humidity up to **90%**, granting a longer product lifetime
- To help heat dissipation thanks to the metal powder inside the paste, granting **-30°+80°C** working temperature.
- To avoid the vibration and the unsoldering of the electronic components of the driver.



E27 LED FILAMENT A60



POWER	**6 W**		**8 W**	
LUMINOUS FLUX	**800 lm**		**1000 lm**	
EFFICIENCY	133 Lm/W		125 Lm/W	
VOLTAGE	100-240 V		100-240 V	
FREQUENCY	50/60 Hz		50/60 Hz	
CURRENT	60 mA		76 mA	
POWER FACTOR	> 0,7		> 0,7	
COLOR RENDERING INDEX RA	> 80		> 80	
BEAM ANGLE	360°		360°	
WARM UP TIME	≤ 0,5"		≤ 0,5"	
SWITCHING CYCLE	> 100.000		> 100.000	
LIFETIME	25.000 h		25.000 h	
KELVIN	4000 K	2700 K	4000 K	2700 K
REF. CODE	H.LED.FIL.4K	H.LED.FIL.3K	H2.LED.FIL.4K	H2.LED.FIL.3K
COMPARISON	**6W 800 Lm** = **60W** incandescent; SAVE 90%		**8W 1000 Lm** = **75W** incandescent; SAVE 89%	

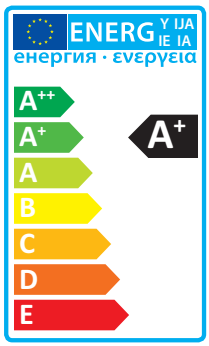

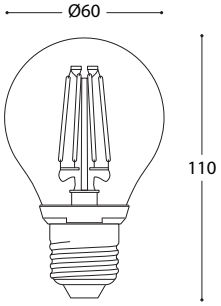

A60- E27

E27 LED FILAMENT A70



POWER	**12 W**	
LUMINOUS FLUX	**1500 lm**	
EFFICIENCY	125 Lm/W	
VOLTAGE	100-240 V	
FREQUENCY	50/60 Hz	
CURRENT	100 mA	
POWER FACTOR	> 0,7	
COLOR RENDERING INDEX RA	> 80	
BEAM ANGLE	360°	
WARM UP TIME	≤ 0,5"	
SWITCHING CYCLE	> 100.000	
LIFETIME	25.000 h	
KELVIN	4000 K	2700 K
REF. CODE	H3.LED.FIL.4K	H3.LED.FIL.3K
COMPARISON	**12W 1500 Lm** = **100W** incandescent; SAVE 88%	

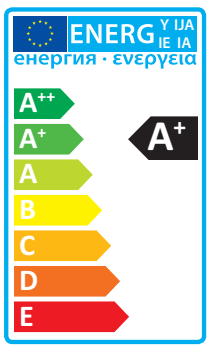

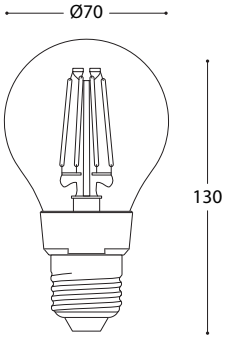

A70- E27

GX53 LED Ø75mm

TÜV CERTIFIED LED MODULES

fumagalli since 1973

INDOOR & OUTDOOR USE

-30 +80 °C	90% HUMIDITY
VOLTAGE SURGE RESISTANT	

PCB AND CONNECTION RING

- Special connection ring to avoid the PCB deformation under high temperatures and to keep the PCB adhering to the heatsink.



LENS

- Frosted color lens reducing dazzle.
- Made of UV stabilized resin material to avoid yellowing process.
- Very compact and **slim design** for a better light distribution and for improving the light efficiency.





GOLD WIRE BONDING

- LED chips connected by pure **gold wires** able to withstand at the highest and lowest temperatures and granting a **lumens maintenance factor > 80%**.
- SMD 3528 LED.

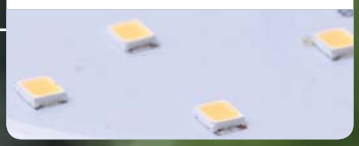

DRIVER 100-240V

- IC isolated driver technology.
- Wide voltage range: **100-240V** +/- 10% tolerance to protect the driver both from voltage droop and voltage overshoot.
- High quality capacitors and multiple resistances able to withstand power surges.





GX53 LAMPHOLDER

- Quick and easy lamp replacement and version upgrade.
- Made of PBT material resisting up to 180° and 250V.
- VDE certified.



GX53 Ø75mm



LVD tested
EMC tested
ERP 6000h

POWER	**3 W**	
LUMINOUS FLUX	**350 lm**	
EFFICIENCY	116 Lm/W	
VOLTAGE	100-240 V	
FREQUENCY	50/60 Hz	
CURRENT	30 mA	
COLOR RENDERING INDEX RA	> 80	
BEAM ANGLE	120°	
WARM UP TIME	≤ 0,5”	
SWITCHING CYCLE	> 30.000	
LIFETIME	25.000 h	
KELVIN	4000 K	3000 K
REF. CODE	H.LED.G53	H.LED.G53.3K
COMPARISON	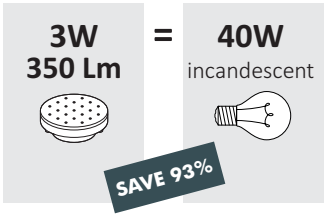	

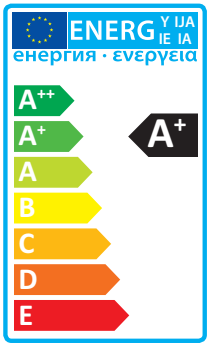

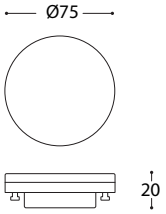

GX53

GX53 LED Ø100mm

TÜV CERTIFIED LED MODULES

SILICONE PROTECTION

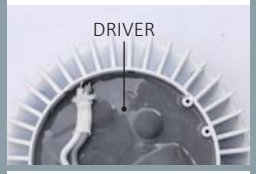

INDOOR & OUTDOOR USE

-30 +80 °C	90% HUMIDITY

VOLTAGE SURGE RESISTANT

LENS
- Frosted color lens reducing dazzle.
- Made of UV stabilized resin material to avoid yellowing process.



PCB AND CONNECTION RING
- Special connection ring to avoid PCB deformation under high temperatures and to keep the PCB adhering to the heatsink.
- Special thermoconductive paste for gluing firmly the PCB to the heatsink and for helping the heat dissipation.



GOLD WIRE BONDING
- LED chips connected by pure **gold wires** able to withstand at the highest and lowest temperatures and granting a **lumens maintenance factor > 80%**.
- SMD 3528 LED.





HEATSINK
- Made by white painted aluminum.
- Special design to grant a correct heat dissipation.

DRIVER 100-240V
- IC isolated driver technology.
- Wide voltage range: **100-240V** +/- 10% tolerance to protect the driver both from voltage droop and voltage overshoot.
- **Double 400V capacitors** and multiple resistances to withstand power surges.



GX53 LAMP HOLDER
- Quick and easy lamp replacement and version upgrade.
- Made of PBT material resisting up to 180° and 250V.
- VDE certified.





THERMOCONDUCTIVE SILICONE PASTE
- To protect the driver against moisture and humidity up to **90%**, granting a longer product lifetime
- To help heat dissipation thanks to the metal powder inside the paste, granting **-30°+80°C** working temperature.
- To avoid the vibration and the unsoldering of the electronic components of the driver.



GX53 Ø100mm



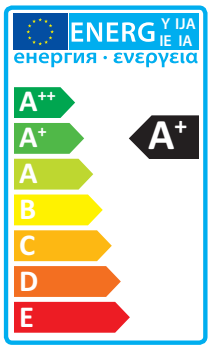

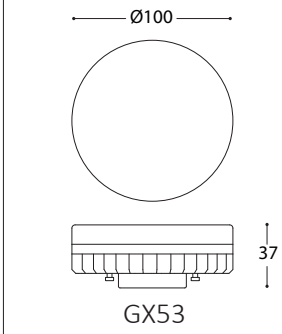

POWER	**7 W**		**10 W**	
LUMINOUS FLUX	**800 lm**		**1200 lm**	
EFFICIENCY	114 Lm/W		120 Lm/W	
VOLTAGE	100-240 V		100-240 V	
FREQUENCY	50/60 Hz		50/60 Hz	
CURRENT	34 mA		48 mA	
POWER FACTOR	0,9		0,9	
COLOR RENDERING INDEX RA	> 80		> 80	
BEAM ANGLE	120°		120°	
WARM UP TIME	≤ 0,5"		≤ 0,5"	
SWITCHING CYCLE	> 30.000		> 30.000	
LIFETIME	25.000 h		25.000 h	
KELVIN	4000 K	3000 K	4000 K	3000 K
REF. CODE	H2.LED.G53	H2.LED.G53.3K	H3.LED.G53	H3.LED.G53.3K
COMPARISON	**7W 800 Lm** = **75W** incandescent SAVE 90%		**10W 1200 Lm** = **100W** incandescent SAVE 90%	

GX53 LED Ø180mm

TÜV CERTIFIED LED MODULES

SILICONE PROTECTION

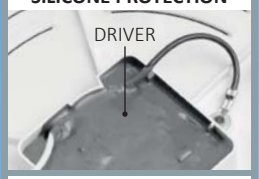

INDOOR & OUTDOOR USE

-30 +80 °C	90% HUMIDITY

VOLTAGE SURGE RESISTANT

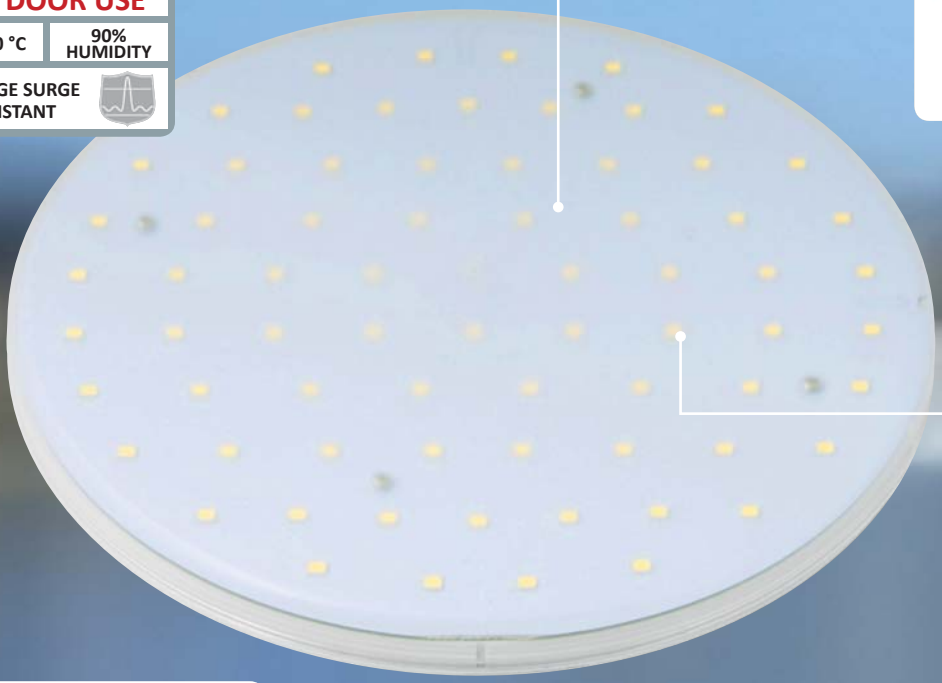

LENS

- Frosted color lens reducing dazzle.
- Made of UV stabilized resin material to avoid yellowing process.
- Very compact and slim design for a better light distribution and for improving the light efficiency.



GOLD WIRE BONDING

- LED chips connected by pure **gold wires** able to withstand at the highest and lowest temperatures and granting a **lumens maintenance factor > 80%**.
- SMD 3528 LED.

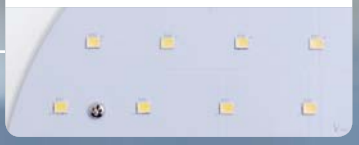

DRIVER 100-240V

- IC isolated driver technology.
- Wide voltage range: **100-240V** +/- 10% tolerance to protect the driver both from voltage droop and voltage overshoot.
- **Double 400V capacitors** and multiple resistances to withstand power surges.



HEAT DISSIPATION

- Special design of the lamp base to grant a proper air circulation and avoid overheating problems.





GX53 LAMP HOLDER

- Quick and easy lamp replacement and version upgrade.
- Made of PBT material resisting up to 180° and 250V.
- VDE and NEMKO certified.



THERMOCONDUCTIVE SILICONE PASTE (11W-18W)

- To protect the driver against moisture and humidity up to **90%**, granting a longer product lifetime
- To help heat dissipation thanks to the metal powder inside the paste, granting **-30°+80°C** working temperature.
- To avoid the vibration and the unsoldering of the electronic components of the driver.



GX53 Ø180mm



POWER	**7 W**
LUMINOUS FLUX	**600 lm**
EFFICIENCY	86 Lm/W
VOLTAGE	100-240 V
FREQUENCY	50/60 Hz
CURRENT	60 mA
POWER FACTOR	0,5
COLOR RENDERING INDEX RA	> 80
BEAM ANGLE	90°
WARM UP TIME	≤ 0,5"
SWITCHING CYCLE	30.000
LIFETIME	25.000 h

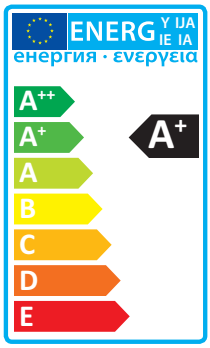

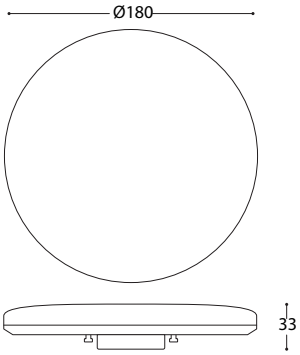

GX53

KELVIN	4000 K	3000 K
REF. CODE	H6.LED.G53.4K	H6.LED.G53.3K
COMPARISON	**7W 600 Lm** = **60W** incandescent — SAVE 88%	

GX53 Ø180mm



POWER	**11 W**	**18 W**
LUMINOUS FLUX	**1300 lm**	**2000 lm**
EFFICIENCY	118 Lm/W	111 Lm/W
VOLTAGE	100-240 V	100-240 V
FREQUENCY	50/60 Hz	50/60 Hz
CURRENT	150 mA	200 mA
POWER FACTOR	0,9	0,9
COLOR RENDERING INDEX RA	> 80	> 80
BEAM ANGLE	90°	90°
WARM UP TIME	≤ 0,5"	≤ 0,5"
SWITCHING CYCLE	> 25.000	> 25.000
LIFETIME	25.000 h	25.000 h

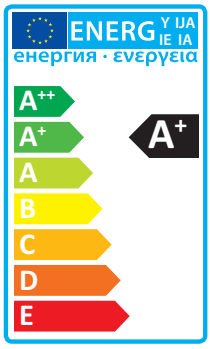

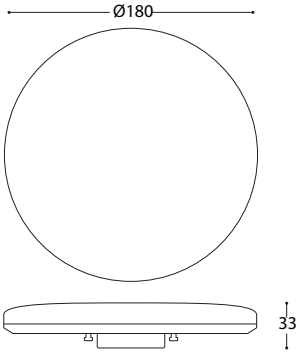

GX53

KELVIN	4000 K	3000 K	4000 K	3000 K
REF. CODE	H4.LED.G53	H4.LED.G53.3K	H5.LED.G53.4K	H5.LED.G53.3K
COMPARISON	**11W 1300 Lm** = **100W** incandescent — SAVE 89%		**18W 2000 Lm** = **150W** incandescent — SAVE 88%	

GU10 LED

TÜV CERTIFIED LED MODULES

SILICONE PROTECTION

DRIVER



INDOOR & OUTDOOR USE

-30 +80 °C	90% HUMIDITY

VOLTAGE SURGE RESISTANT

LENS

- Frosted lens with prismatic shape reducing dazzle.
- Made of UV stabilized PMMA to avoid yellowing process.



GOLD WIRE BONDING

- LED chips connected by pure **gold wires** able to withstand at the highest and lowest temperatures and granting a **lumens maintenance factor > 80%**.
- SMD 3528 LED.





HEATSINK

- Made by aluminum and designed to grant a correct heat dissipation.



DRIVER 100-240V

- IC isolated driver technology.
- Wide voltage range: **100-240V** +/- 10% tolerance to protect the driver both from voltage droop and voltage overshoot.
- **Double 400V capacitors** and multiple resistances to withstand power surges.



GU10 LAMPHOLDER

- Quick and easy lamp replacement and version upgrade.
- Made of ceramic material to resist up to 250°.
- VDE certified.



THERMOCONDUCTIVE SILICONE PASTE

- To protect the driver against moisture and humidity up to **90%**, granting a longer product lifetime
- To help heat dissipation thanks to the metal powder inside the paste, granting **-30°+80°C** working temperature.
- To avoid the vibration and the unsoldering of the electronic components of the driver.



GU10



POWER	**3,5 W**
LUMINOUS FLUX	**400 lm**
EFFICIENCY	**114 lm/W**
VOLTAGE	100-240 V
FREQUENCY	50/60 Hz
CURRENT	70 mA
COLOR RENDERING INDEX RA	> 80
BEAM ANGLE	36°
WARM UP TIME	≤ 0,5”
SWITCHING CYCLE	> 25.000
LIFETIME	25.000 h

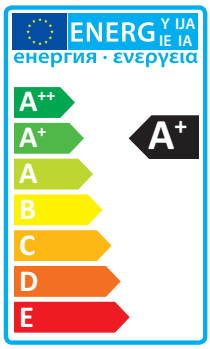

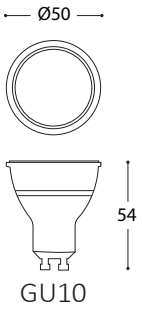

KELVIN	4000 K	3000 K
REF. CODE	H.LED.GU10	H.LED.GU10.3K

COMPARISON

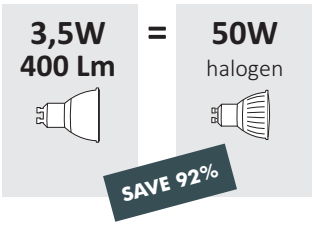



FUMAGALLI IN THE WORLD

AZORES **PORTUGAL**



















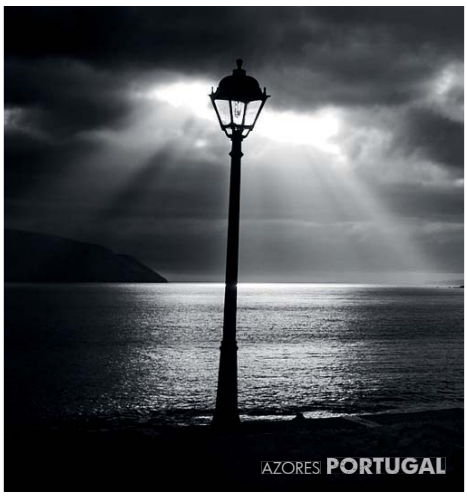



MADE IN ITALY



GREAT BRITAIN
CHESHIRE

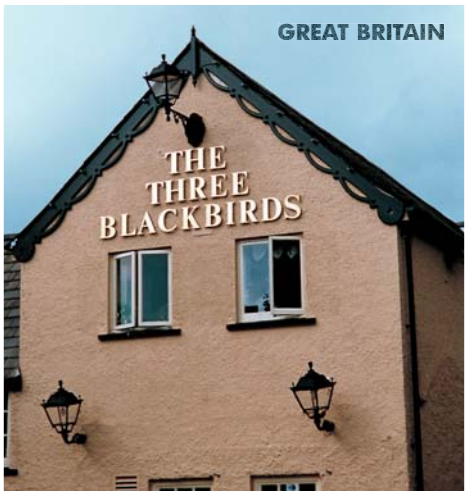

GREAT BRITAIN

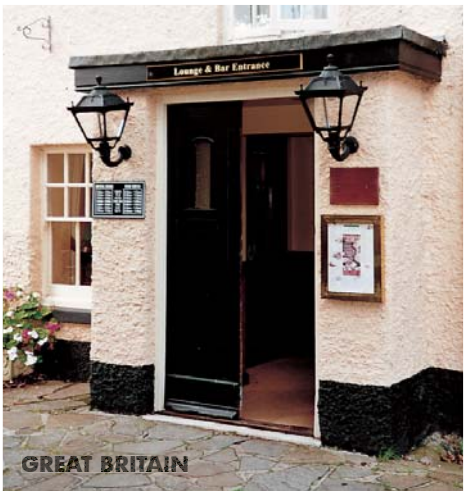

GREAT BRITAIN



GREAT BRITAIN
NORTH EAST ENGLAND



GREAT BRITAIN
CHESHIRE


GREAT BRITAIN CORNWALL


RUSSIA MOSCOW - PARK PHILI


RUSSIA

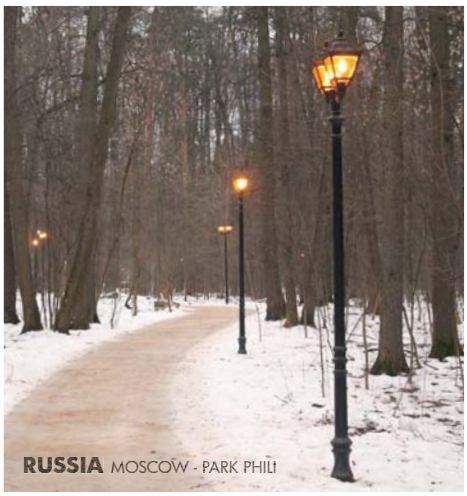
RUSSIA MOSCOW - PARK PHILI


RUSSIA


IRELAND



IRELAND


IRELAND


IRELAND CAVAN - CABRA CASTLE HOTEL


IRELAND
CAVAN - CABRA CASTLE HOTEL


GREECE PAROS


GREECE PAROS

MADE IN ITALY


GREECE NEAPOLIS COAST SIDE


MUNICIPALITY OF LESVOS **GREECE**

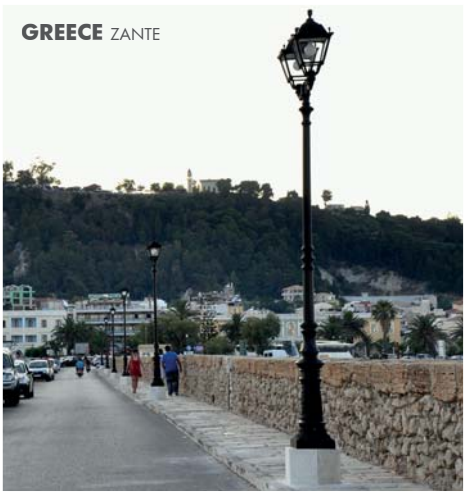
GREECE ZANTE


GREECE AIGIO


GREECE ATHENS


CYPRUS
İSKELE MUNICIPALITY – MARINE PARK


CYPRUS
FOLEYS SCHOOL - LIMASSOL

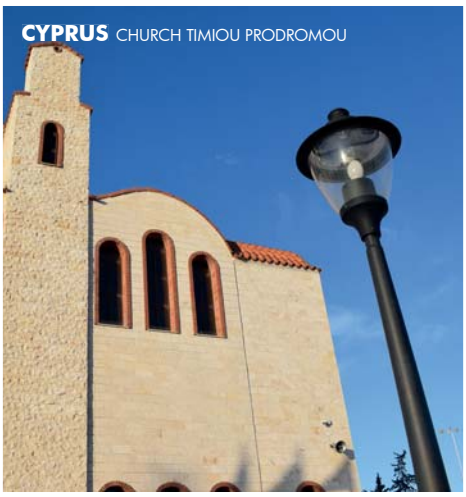
CYPRUS CHURCH TIMIOU PRODROMOU


PRINCESS BEACH HOTEL LARNACA **CYPRUS**

fumagalli since 1973









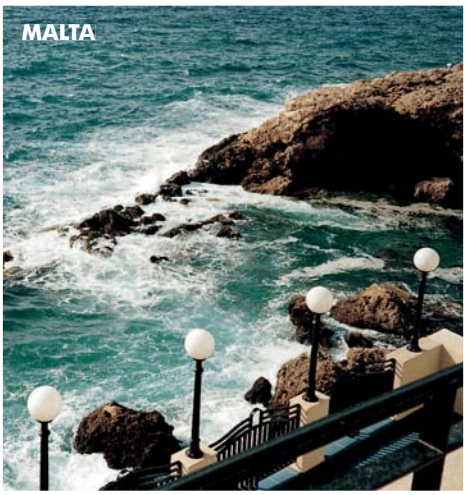

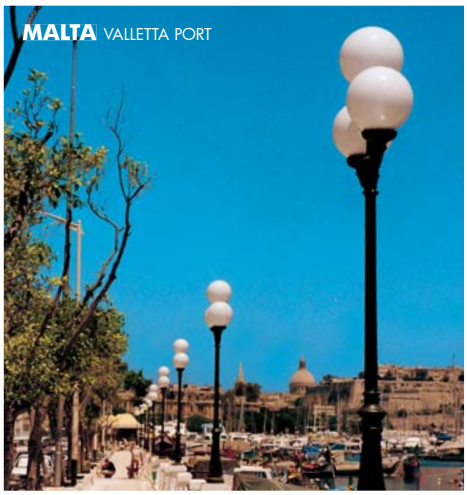





MADE IN ITALY

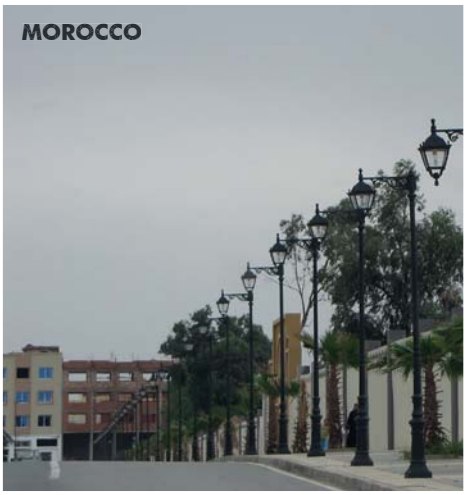
MOROCCO

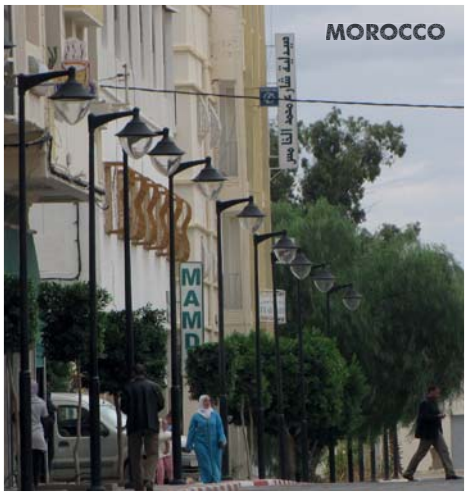
MOROCCO


MOROCCO
MANSOURIA BEACH RESORT

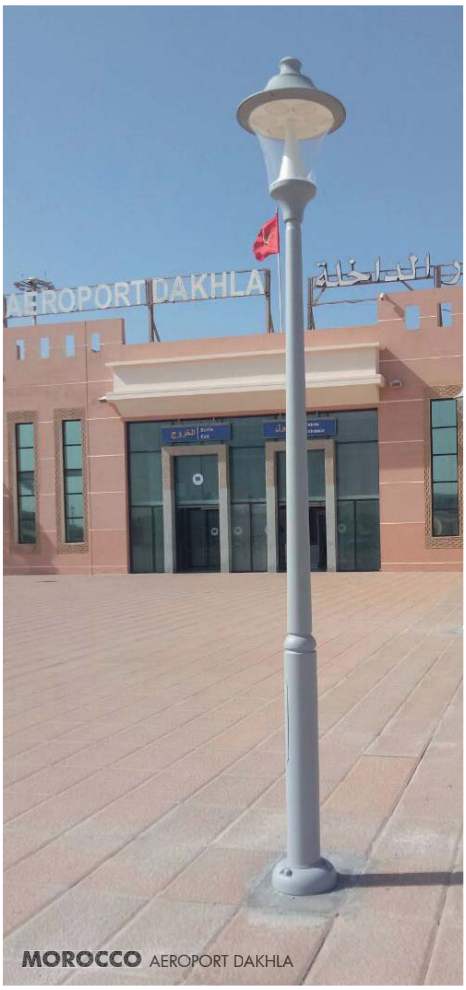
AEROPORT DAKHLA
MOROCCO AEROPORT DAKHLA


MOROCCO


MOROCCO


TUNISIA


TUNISI - SHERATON HOTEL TUNISIA


TUNISIA

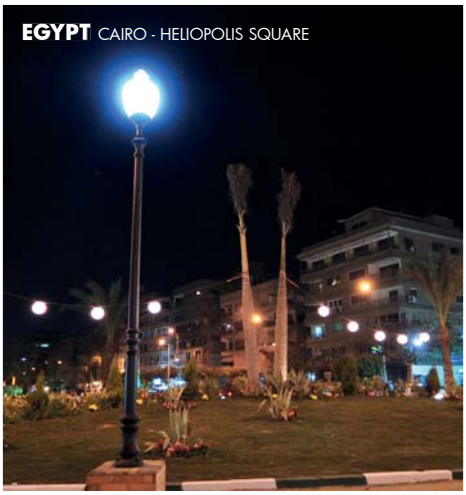



















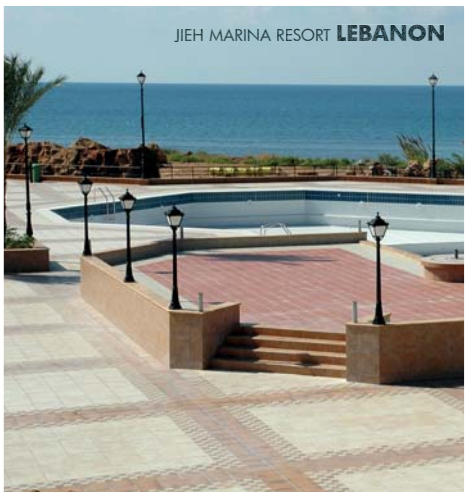



MADE IN ITALY

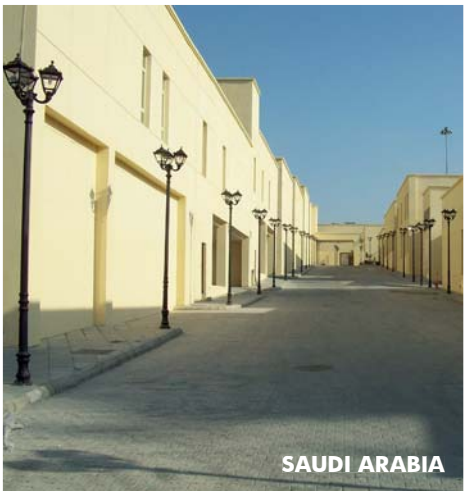
SAUDI ARABIA


SAUDI ARABIA


SAUDI ARABIA


SAUDI ARABIA

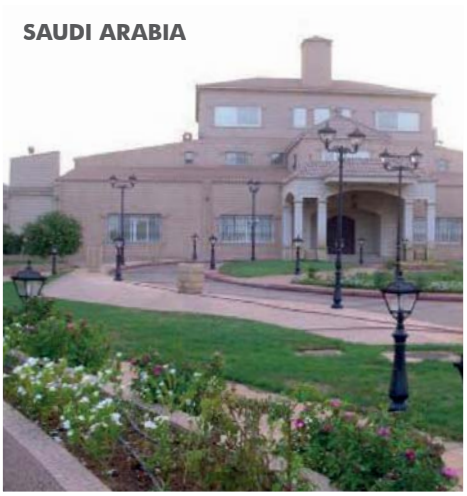
SAUDI ARABIA

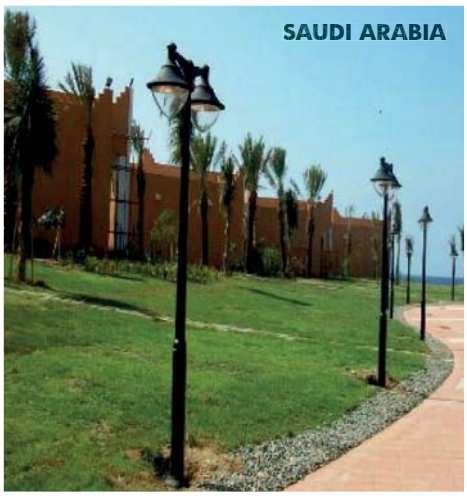
SAUDI ARABIA


SAUDI ARABIA


SAUDI ARABIA

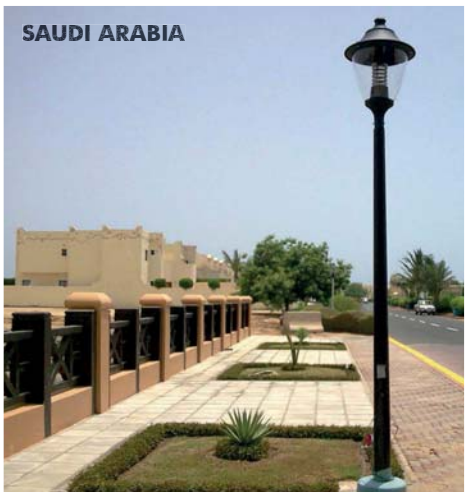
SAUDI ARABIA

fumagalli since 1973















MADE IN ITALY


QATAR DOHA - CORNICE


QATAR


QATAR DOHA - AL KHULAIFAT PARK


QATAR



BAHRAIN



KUWAIT


KUWAIT

fumagalli since 1973

U.A.E. DUBAI DOWNTOWN - BURJ KHALIFA



U.A.E. DUBAI - JUMEIRAH BEACH HOTEL



U.A.E. DUBAI - BURJ AL ARAB

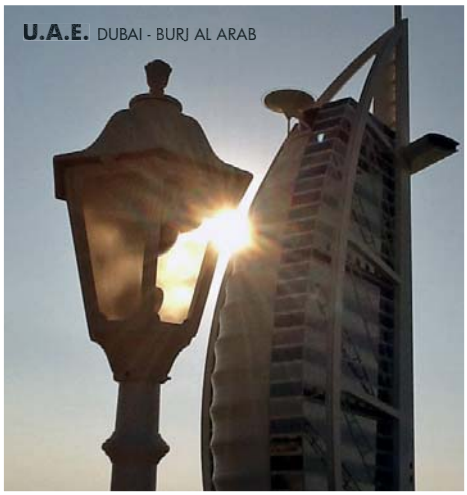

U.A.E.



U.A.E. DUBAI - THE PALM



U.A.E. DUBAI - ACADEMIC CITY



U.A.E. DUBAI - NAKHEEL VILLAS

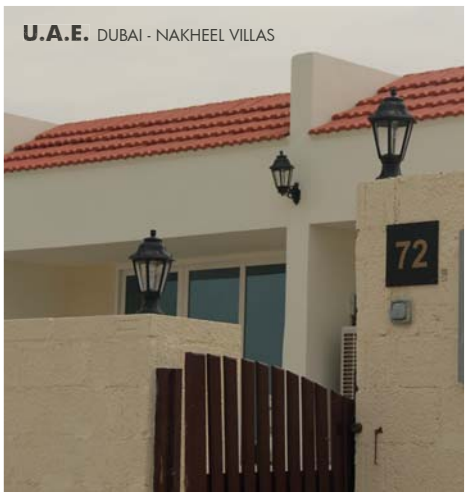

U.A.E. DUBAI - SHOROOQ COMMUNITY CENTRE



MADE IN ITALY


OMAN MUSCAT - MINISTRY OF JUSTICE

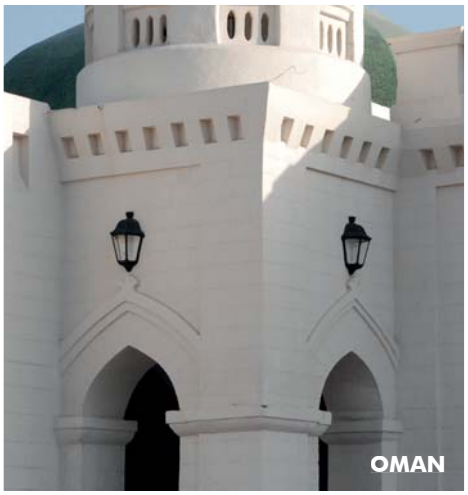
OMAN


MUSCAT - MINISTRY OF JUSTICE OMAN

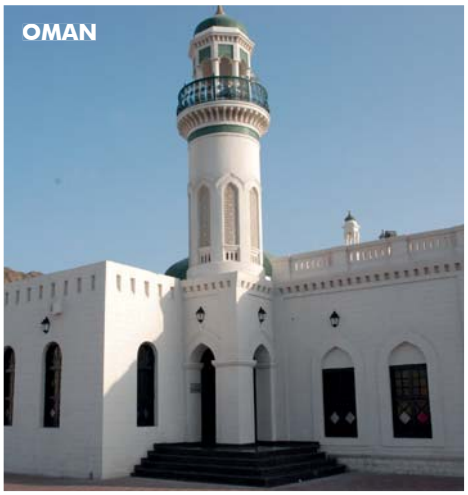
OMAN


MUSCAT - AL BUSTAN PALACE OMAN

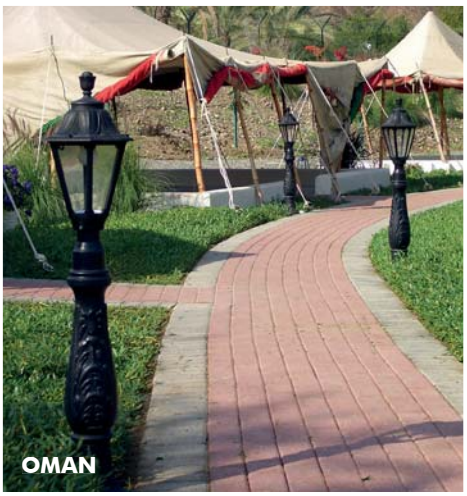
OMAN


OMAN

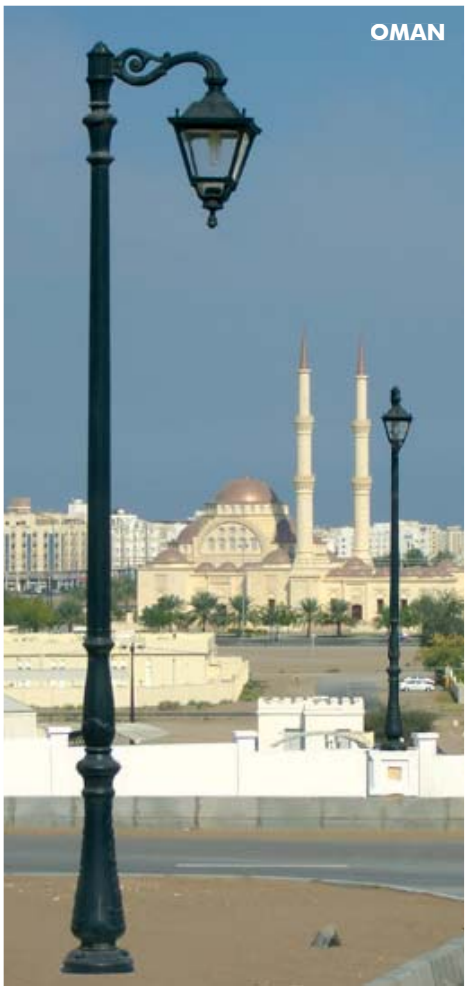
OMAN

fumagalli since 1973

















MADE IN ITALY


THAILAND
KELAB MASYARA
东陵民众俱乐部
தங்லின் சமூக மன்
TANGLIN COMMUNITY


THAILAND


KAOHSIUNG - ELEMENTARY SCHOOL TAIWAN

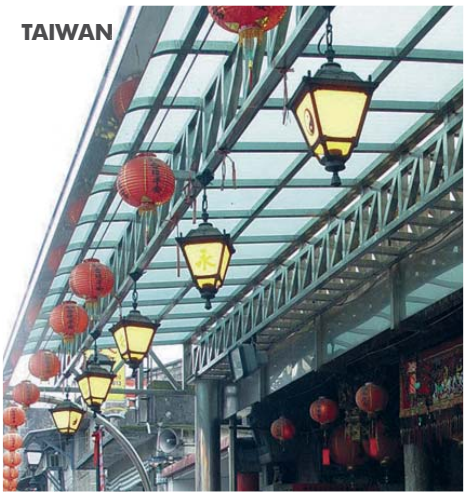
TAIWAN


TAIWAN

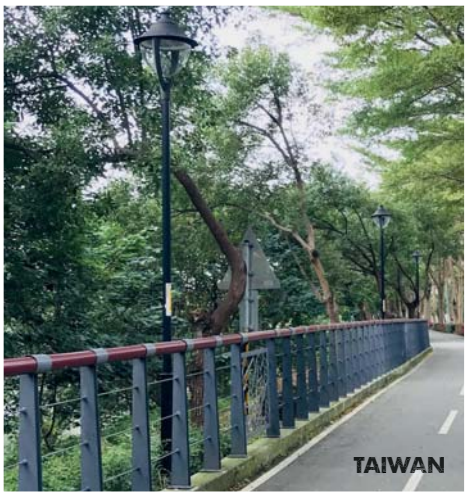
TAIWAN


SINGAPORE


CAVITE - PROVINCIAL CAPITOL **PHILIPPINES**



MANILA - INTRAMUROS **PHILIPPINES**

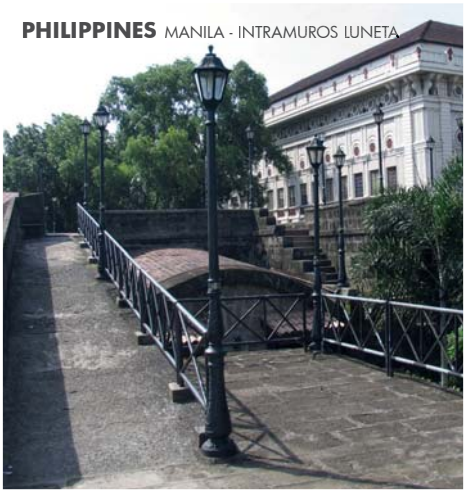
PHILIPPINES MANILA - INTRAMUROS LUNETA


LAPU-LAPU PLAZA **PHILIPPINES**


PHILIPPINES PAMPANGGA - PROVINCIAL CAPITOL

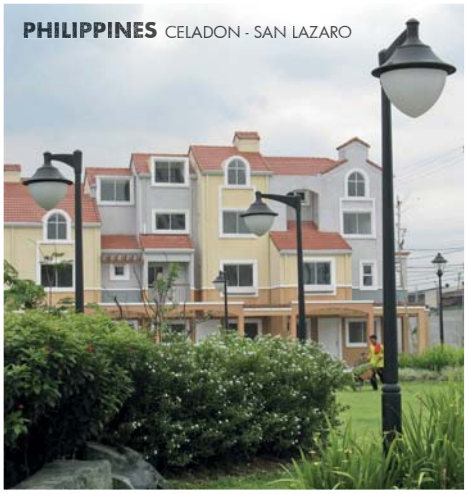
PHILIPPINES CELADON - SAN LAZARO

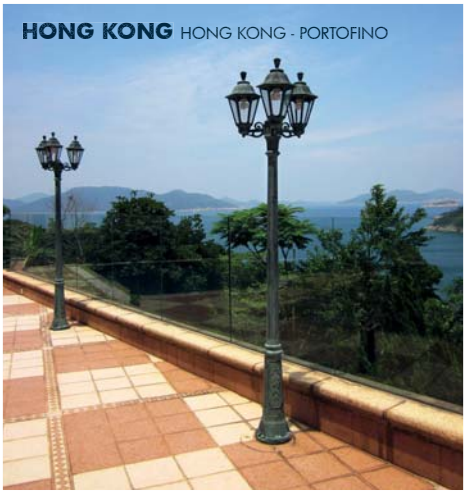
HONG KONG HONG KONG - PORTOFINO


HONG KONG

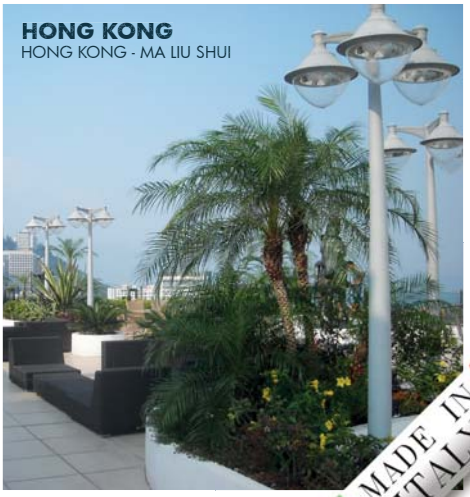
HONG KONG
HONG KONG - MA LIU SHUI

MADE IN ITALY

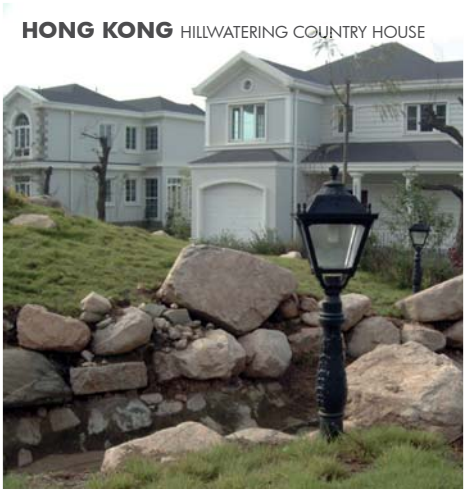

HONG KONG HILLWATERING COUNTRY HOUSE



MACAU



HONG KONG - SHATIN
HONG KONG



BRUNEI AE ASIA AGRI-MART

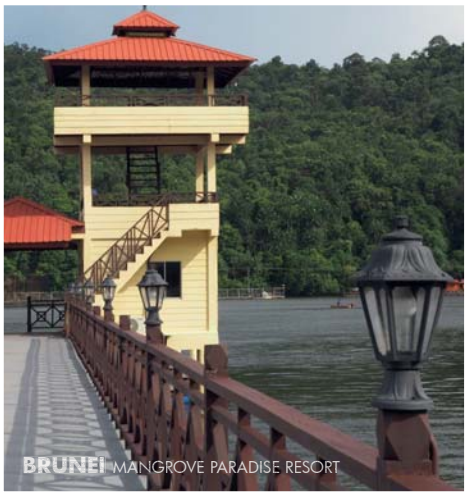

BRUNEI MANGROVE PARADISE RESORT

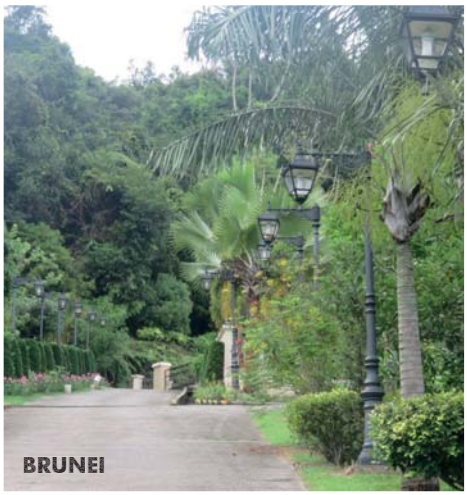

BRUNEI

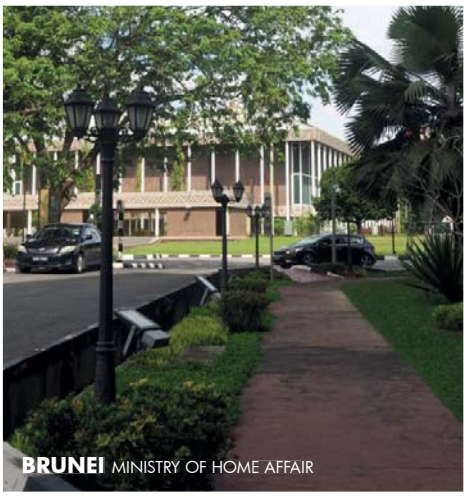

BRUNEI MINISTRY OF HOME AFFAIR



BRUNEI

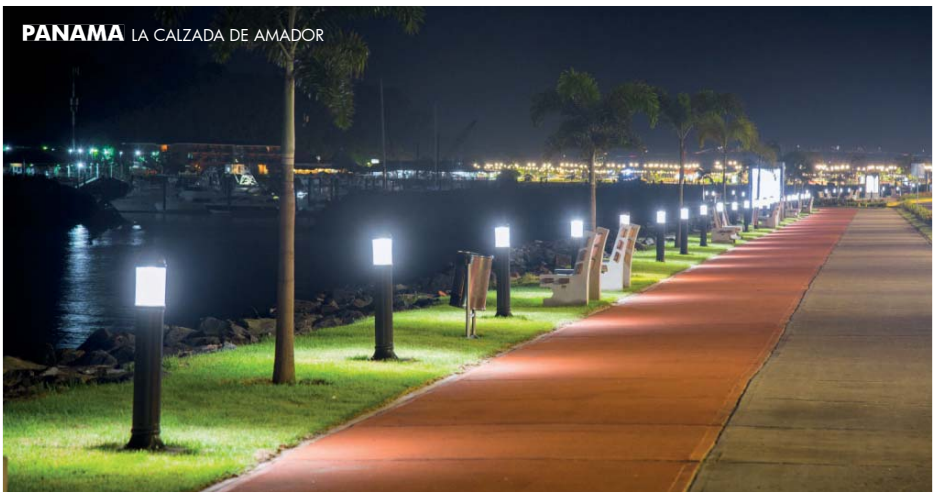

PANAMA LA CALZADA DE AMADOR



MEXICO

fumagalli since 1973

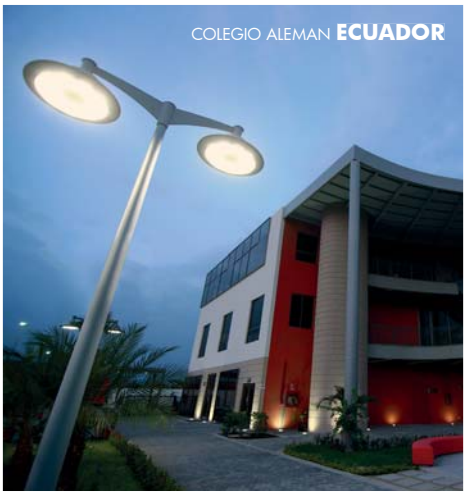
COLEGIO ALEMAN **ECUADOR**


ECUADOR


ECUADOR


ECUADOR


SAMBORONDON **ECUADOR**


SURINAME


ECUADOR


ECUADOR SAMBORONDON


SURINAME PARAMARIBO - INDEPENDENCE SQUARE
MINISTRY OF FINANCE

MADE IN ITALY

fumagalli®

since 1973

GT3-2018

Fumagalli S.r.l.
Via Ca' Bassa, 29
21100 Varese - ITALY
Tel. +39.0332.336353
Fax. +39.0332.336358
E-mail italian.lux@fumagalli.it

www.fumagalli.it